InTouch™ Critical Care Bed
InTouch™ Intensivpflegebett
Letto per terapia intensiva InTouch™
InTouch™-bed voor kritieke zorg
Κρεβάτι εντατικής θεραπείας InTouch™

Model/Modell/Modello/ μοντέλο FL27 (2131/2141)

Version 2.4

stryker®

Parts Manual

Teilekatalog
Parte il manuale
Onderdelenhandleiding
Εγχειρίδιο εξαρτημάτων

For parts or technical assistance call:
Ersatzteile oder technische Unterstützung:
Per parti o assistenza tecnica chiamare i seguenti numeri
Voor onderdelen of technische bijstand belt u:
Για εξαρτήματα ή τεχνική βοήθεια καλέστε:
USA/VS: 1-800-327-0770 (option 2 /opzione 2/ optie 2/ επιλογή 2), Canada/Kanada/Καναδάς: 1-888-233-6888

2012/03 B.0 2131-209-006 REV B www.stryker.com

Table of Contents

ISO 639-2 4
L27-026 5
L27-043 7
OL270006 10
OL270005 12
27-2477 14
27-1660 15
OL270232-XXX 20
27-2546 21
OL270016-XXX 23
L27-044 28
27-2117 32
L27-056 33
L27-055 36
OL270262 39
L27-046 40
27-2478 42
L27-059 46
27-2643 47
OL270206-XXX / OL270211-XXX - (120V) 53
OL250053 - (120V) 54
OL250055 - (120V) 54
OL270165 55
OL270166 56
OL270013-XXX 57
OL270205-XXX / OL270210-XXX - (100V) 59
OL270207-XXX / OL270212-XXX - (200V) 60
OL270208-XXX / OL270213-XXX - (220V) 61
OL270209-XXX / OL270214-XXX - (240V) 62
L27-033 63
OL270058-XXX 68
27-2547-XXX 69
OL270077-XXX 71
OL270019 72
OL270263-XXX 73
L27-039 75
27-2287 76
27-2288 80
OL270180-XXX 84
OL270175 85
OL270255 86
OL270253 87
OL270254 88
OL270164 89
OL270256 90
L27-032 92
27-2289 93
27-2290 95
OL270060-XXX 98
27-1547 99
OL270258-XXX 100
OL270257-XXX 103
L27-051 106
L27-028 107
FA64234 - (L64-150) 108
DM64197 109
DM64196 109
FA64221/FA64238 110
FA64202 111
FA64210 112
FA64214 112
FA64187 113
FA64203 114
FA64209 114
FA64226 115
FA64195 115
FA64225 116
FA64186 116
FA64215 117
FA64216 118
FA64217 119
FA64218 120
FA64219 121
FA64208 122
FA64205 123
27-2287/27-2288 124
OL270254 125
OL270032 126
OL270060-XXX 127
OL270263-XXX 128
27-2456 129
OL270257-XXX 130
OL270258-XXX 131
L17-056 132
L27-056 133
27-2478 134
L27-043 135
L27-046 136

Table of Contents

27-2478 137
27-2546 138
L27-056 139

ISO 639-2

English Name of Language	Target Country Name	ISO 639-2
English	English	eng
French	Français	fre
German	Deutsch	ger
Italian	Italiano	ita
Dutch	Nederlands	dut
Greek	Ελληνική	gre

Return To Table of Contents

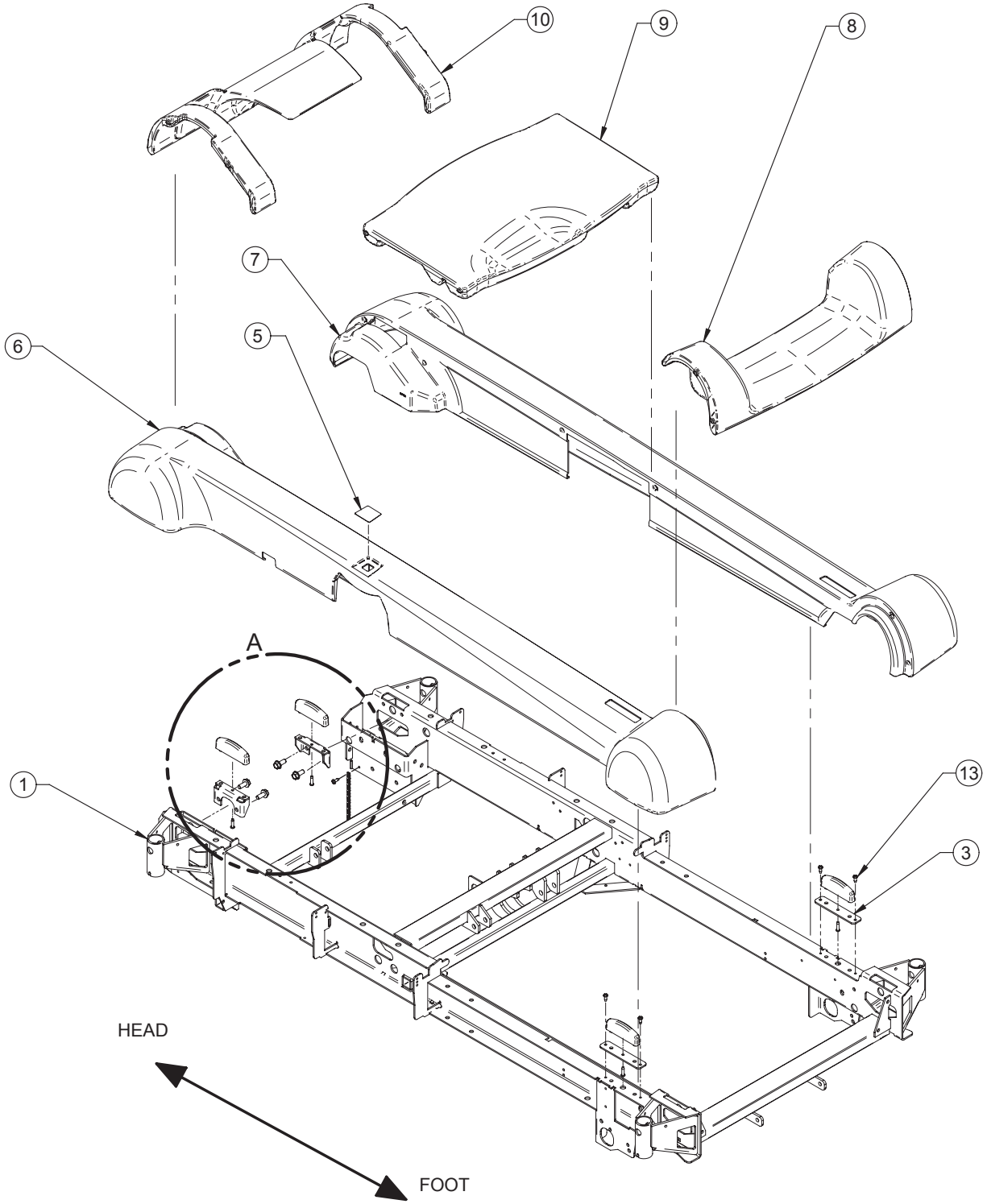

Return To Table of Contents

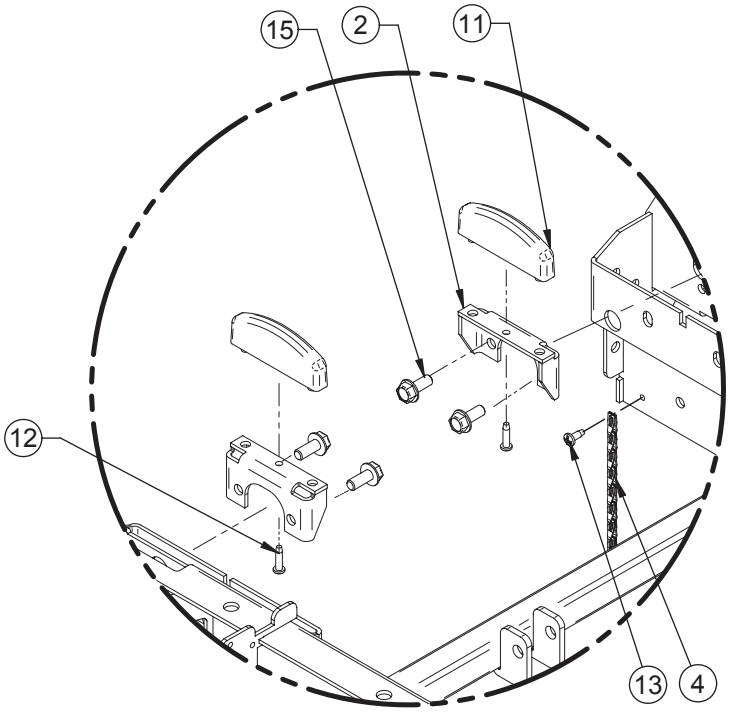

DETAIL A

1	27-0758W	1
2	27-1462W	2
3	27-1628W	2
4	27-2123	1
5	QDF27-1419	1
6	QP27-1008-05	1
7	QP27-1009-05	1
8	QP27-1087-10	1
9	QP27-1093-10	1
10	QP27-1105-10	1
11	QP27-1461-10	4
12	VV23A1G24HL	4
13	VV83A9G16	5
15	VVB4A1O24	4

Return To Table of Contents

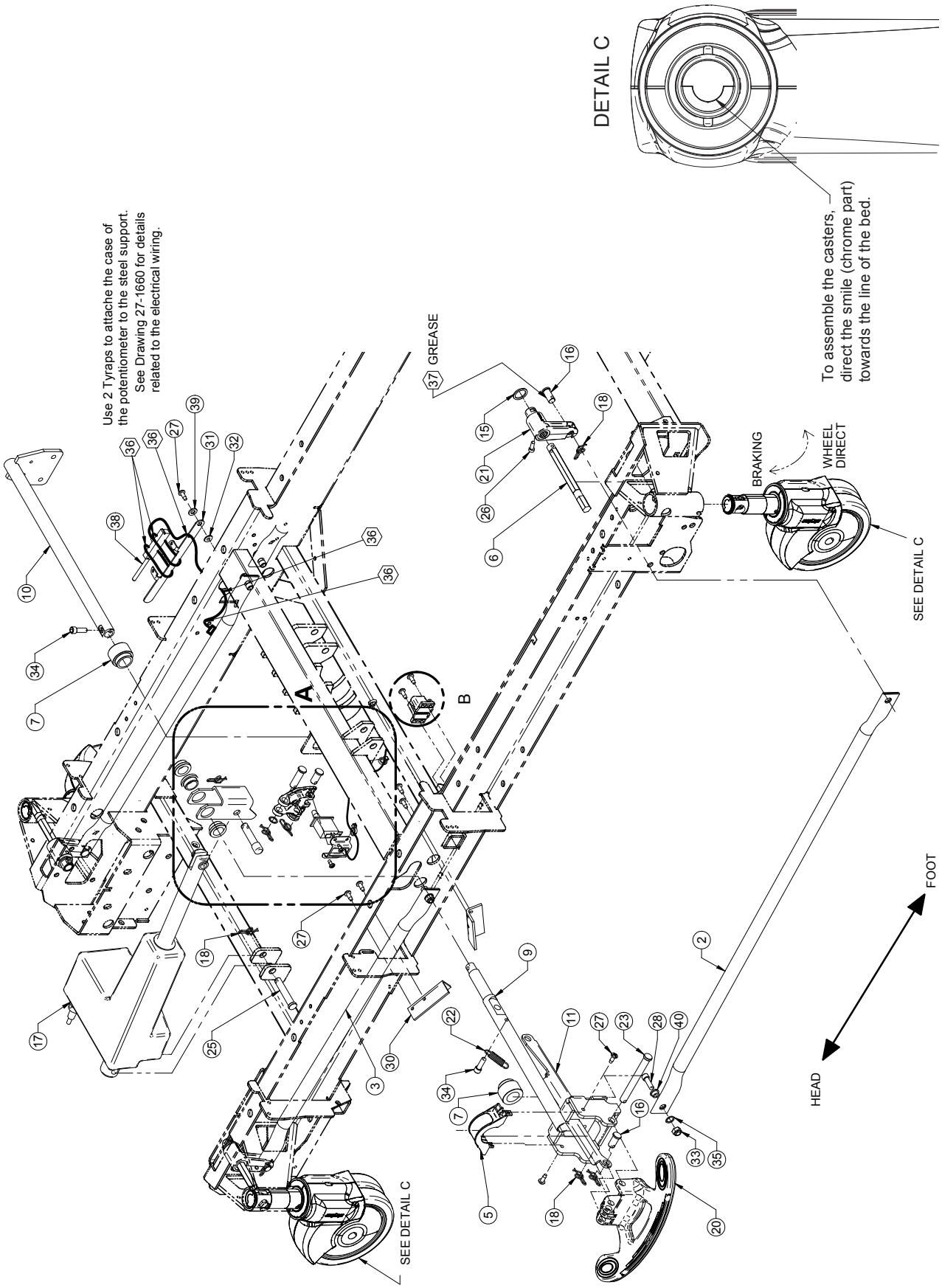

Return To Table of Contents

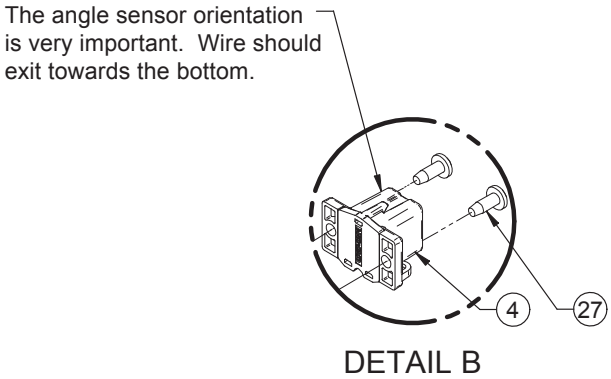

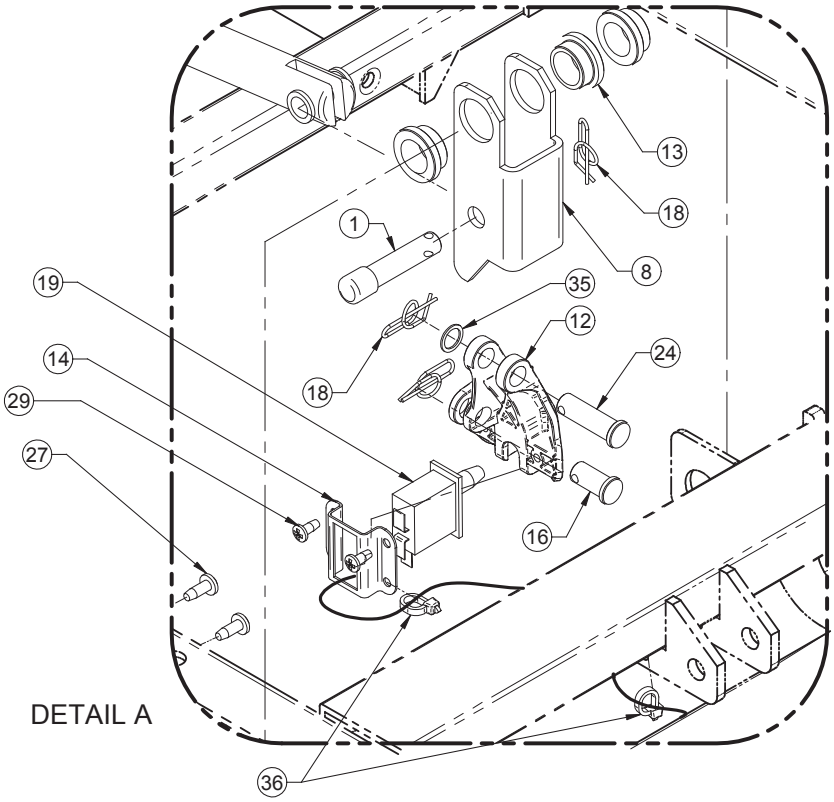

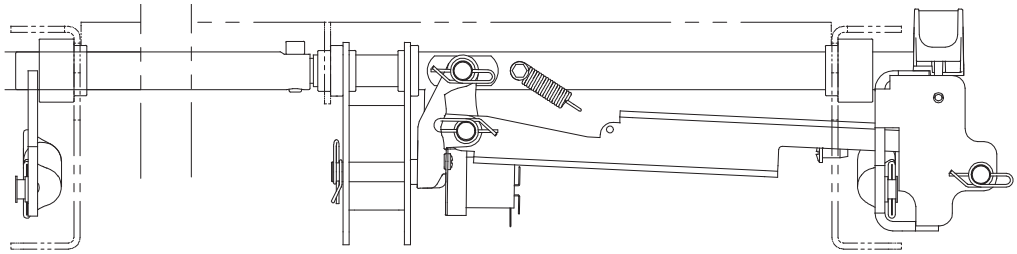

View of Assembled Brake System

Return To Table of Contents

1	27-1402Z	1
2	27-0772Z	2
3	27-0773Z	2
4	27-2477	1
5	QP27-1255-10	1
6	QDF27-1336Z	4
7	27-1354	2
8	27-1391Z	1
9	27-1405Z	1
10	27-1406Z	1
11	27-1411Z	1
12	QPA27-1448	1
13	27-1449	3
14	27-1452Z	1
15	VW10C202802	4
16	VG50A1224	6
17	QDF27-1227	1
18	QDF7878	10
19	QDF9159	1
20	27-2519W	1
21	QPA27-1335	4
22	QRE27-1844	1
23	VG50A1259	1
24	VG50B1236	1
25	VG50B1248	1
26	VV10A0G16-S	4
27	VV83A9G16	9
28	VV10A1N24	4
29	VV83A9E12	2
30	27-1745Z	2
31	27-1946Z	1
32	27-1948	1
33	VE30A1N	4
34	VV10A1N24-S	2
35	VW10C121601	5
36	QDF9518	3
37	M0019	1
38	QDF27-2024	1
39	VW10C081602	1
40	QB2938T1	4

Return To Table of Contents

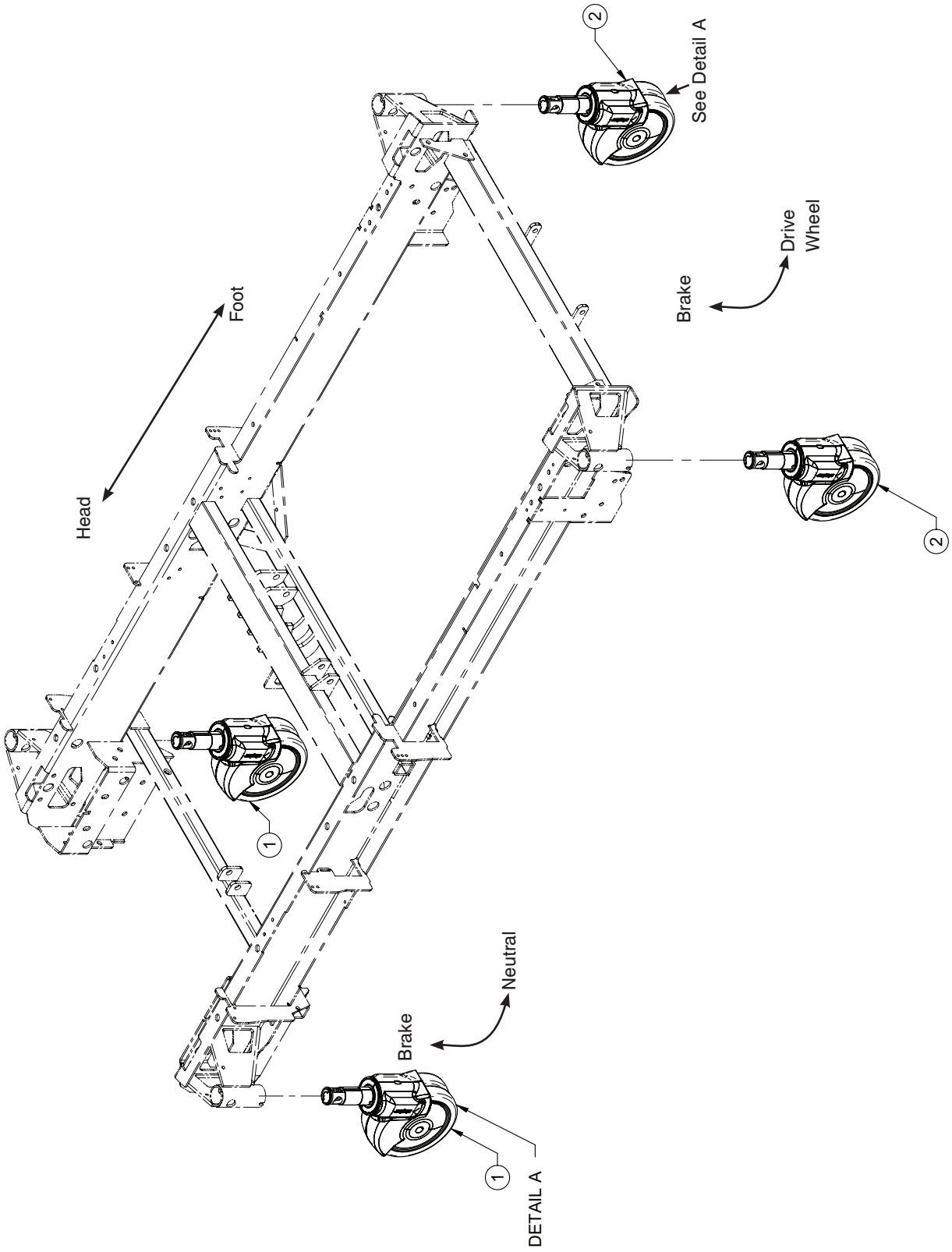

Return To Table of Contents

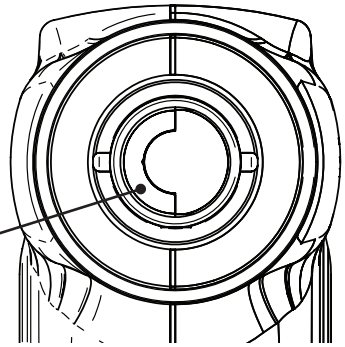

DETAIL A

1	RD27-1970	2
2	RD27-1971	2

Return To Table of Contents

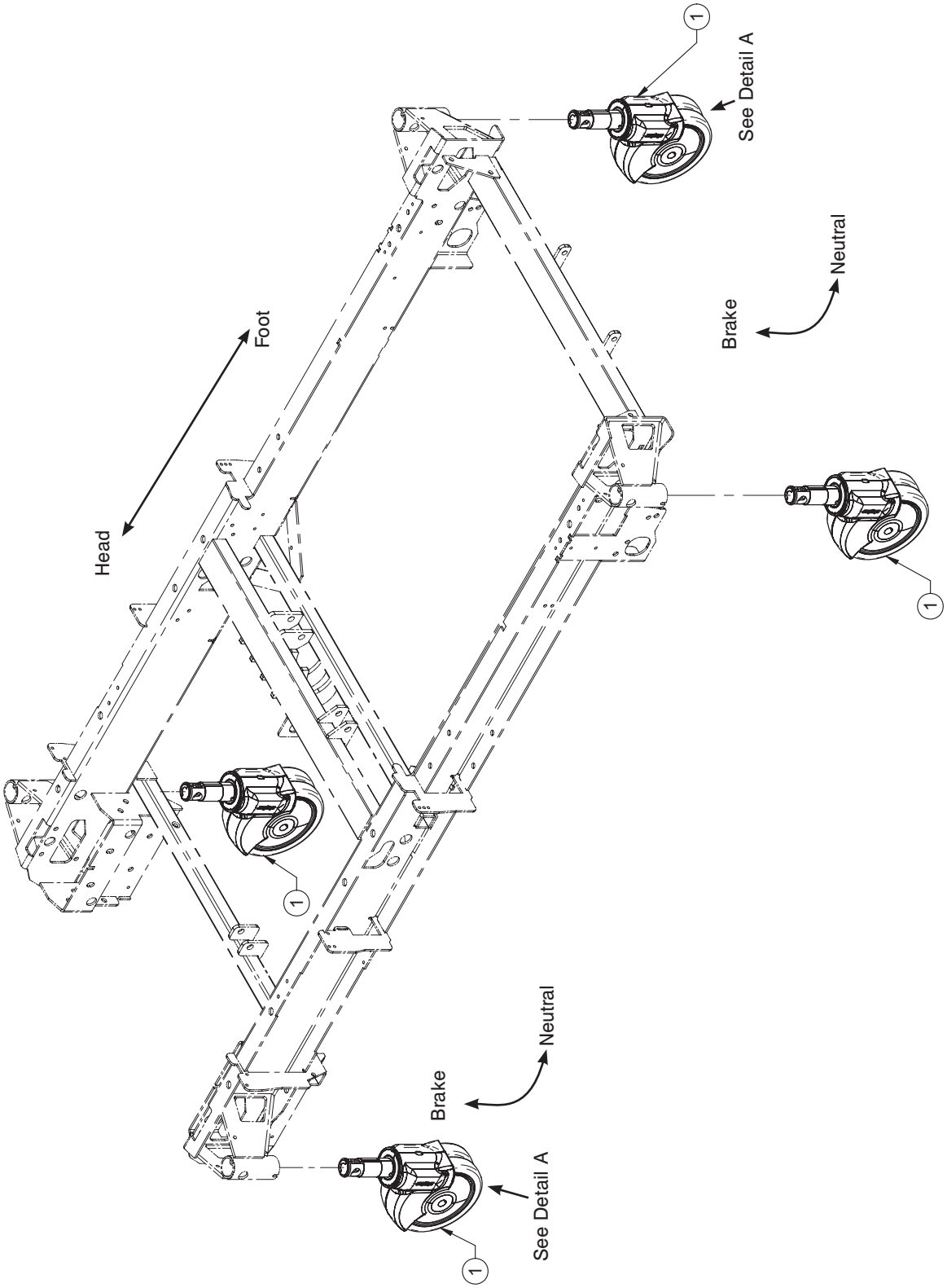

Return To Table of Contents

To assemble casters, direct the smile (chromed part) toward the left side of the bed.

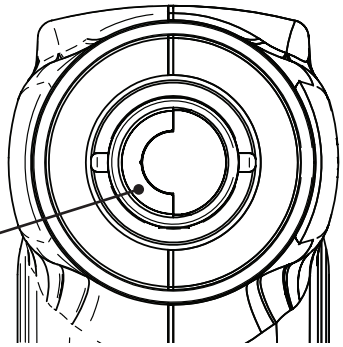

DETAIL A

1	RD27-1970	4

Return To Table of Contents

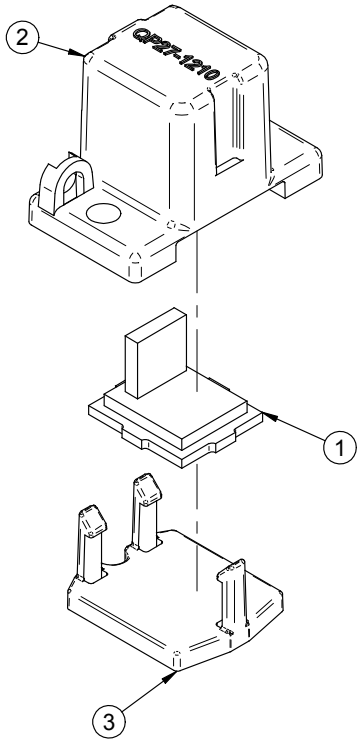

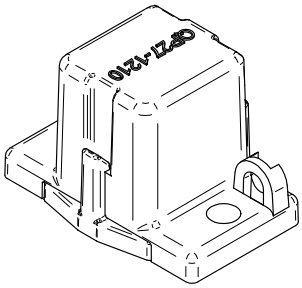

ISO

1	QDF75-0140	1
2	QP27-1210-05	1
3	QP27-1211-05	1

Return To Table of Contents

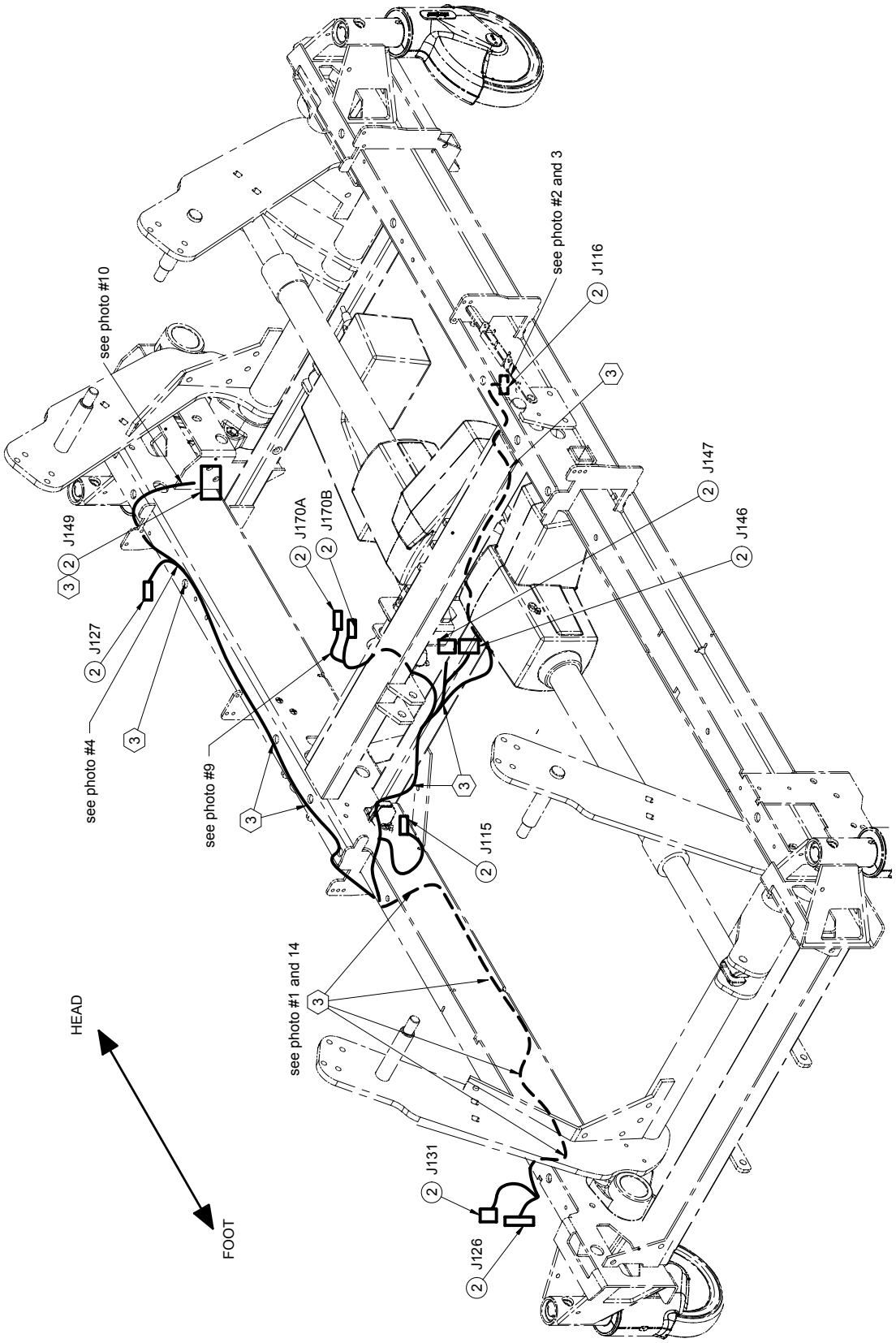

Return To Table of Contents

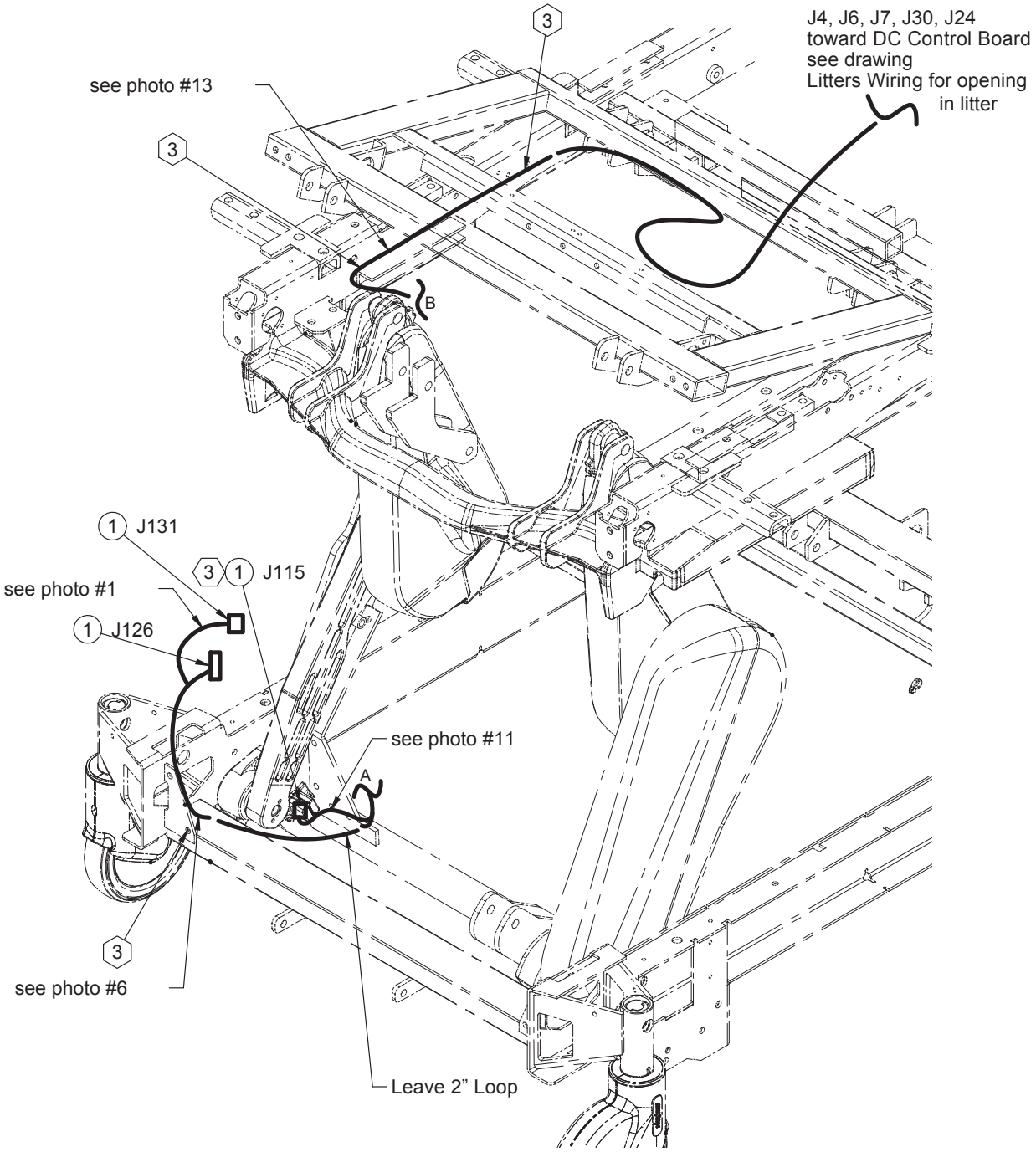

Return To Table of Contents

Note
To avoid any risk of pinching when assembling these cables:

- the bed must be in high position
- the Gatch must be at 15 degrees
- the Foot Litter must be at 45 degrees

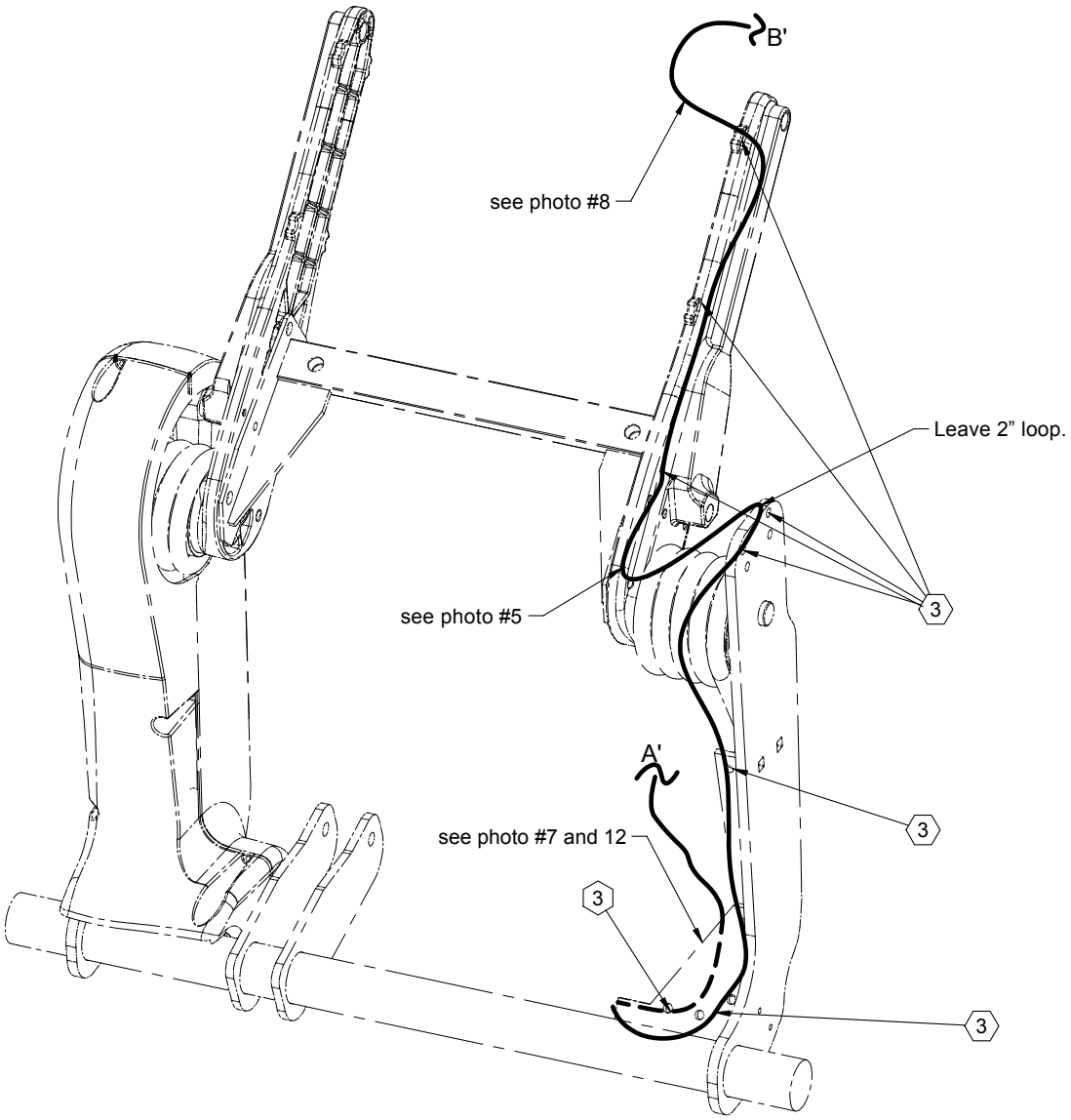

Return To Table of Contents

Be sure to place the connectors one beside the other and in a flat position.

PHOTO #1

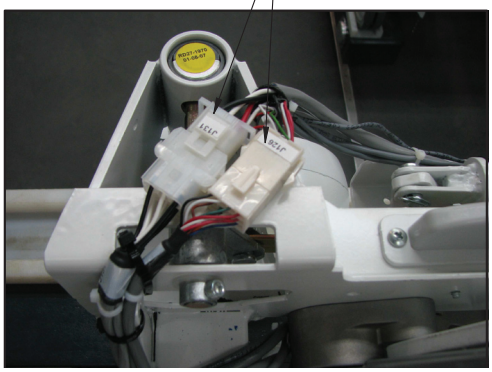

PHOTO #2

PHOTO #3

PHOTO #4

PHOTO #5

PHOTO #6

PHOTO #7

PHOTO #8

PHOTO #9

PHOTO #10

Return To Table of Contents

PHOTO #11

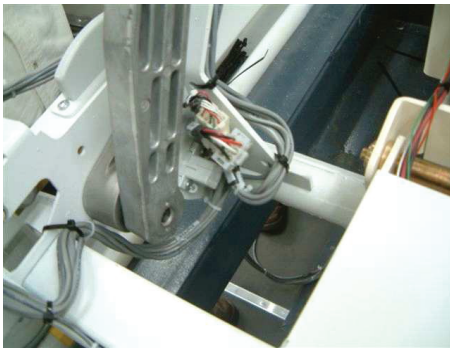

PHOTO #12

PHOTO #13

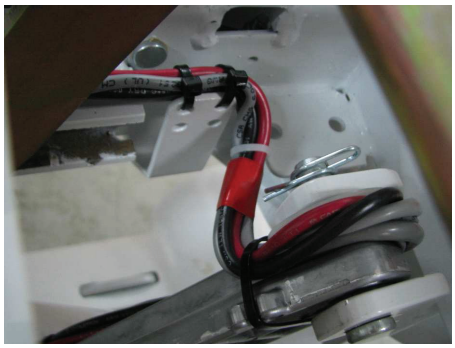

PHOTO #14

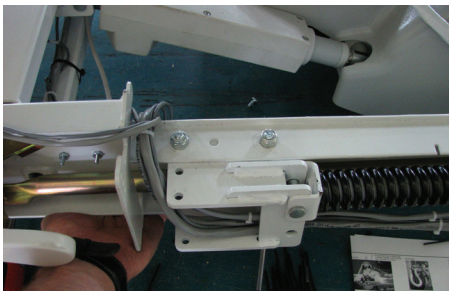

QDF27-2182 CONNECTIONS				
Cable No.	**Connector No.**	**To**	**Cable No.**	**Connector No.**
QDF27-2182	J126	To	QDF27-1181	J126 Hi-lo Harness
QDF27-2182	J131	To	QDF27-1181	J131 Hi-lo Harness
QDF27-2182	J115	To	27-2277	Sensor Base
QDF27-2182	J127	To	QDF2083	CPR Switch
QDF27-2182	J116	To	QDF27-2724	Brake Potentiometer
QDF27-2182	Bornes J170A	To	QDF9159	No Manual Switch
QDF27-2182	Bornes J170B	To	QDF9159	COM Manual Switch
QDF27-2182	J146	To	QDF27-1252	Hi-lo Head Motor
QDF27-2182	J147	To	QDF27-1251	Hi-lo Foot Motor
QDF27-2182	J149	To	QDF27-1227	Brake Motor

1	QDF27-2181	1
2	QDF27-2182	1
3	QDF9518	51

Return To Table of Contents

OL270232-eng = English
OL270232-tri = English/Français/Español
OL270232-bil = English/Français
OL270232-ger = Deutsch
OL270232-ita = Italiano
OL270232-dut = Nederlands
OL270232-gre = Ελληνική

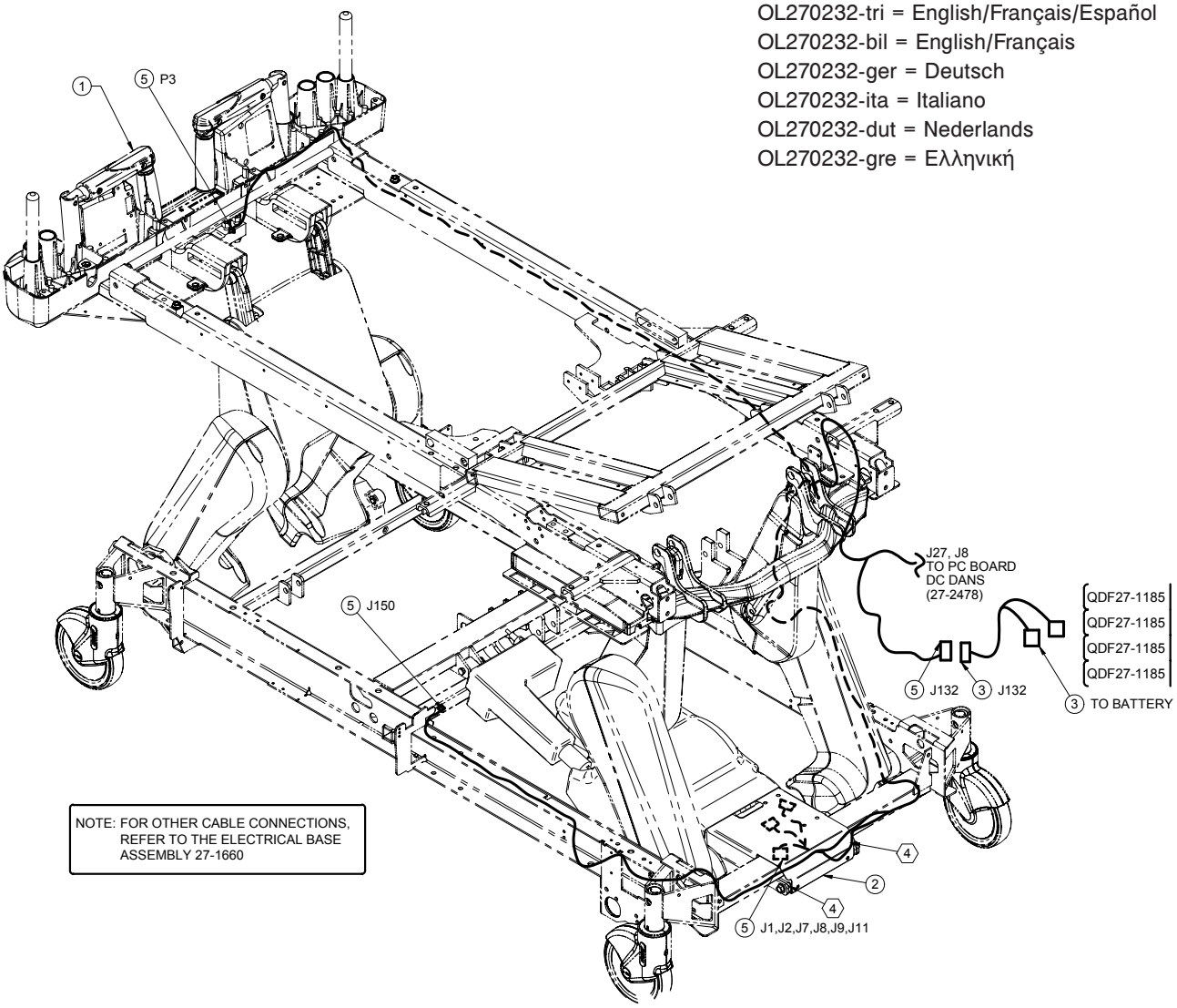

1	27-2547-tri	1 (English/Français/ Español) or
	27-2547-bil	1 (English/Français) or
	27-2547-ger	1 (Deutsch) or
	27-2547-ita	1 (Italiano) or
	27-2547-dut	1 (Nederlands) or
	27-2547-gre	1 (Ελληνική)
2	27-2546	1
3	QDF27-1646	1
4	QDF9518	1
5	QDF27-1185	1

QDF27-1646 CONNECTIONS				
Cable No.	**Connector No.**	**To**	**Cable No.**	**Connector No.**
QDF27-1646	Mini Fit	To	QDF27-1185	J132
QDF27-1646	Black Eyelets	To	QDF9188	BAT (B) POLET (27-2478)
QDF27-1646	White Eyelets	To	QDF9188	BAT (B) POLET (27-2478)

Return To Table of Contents

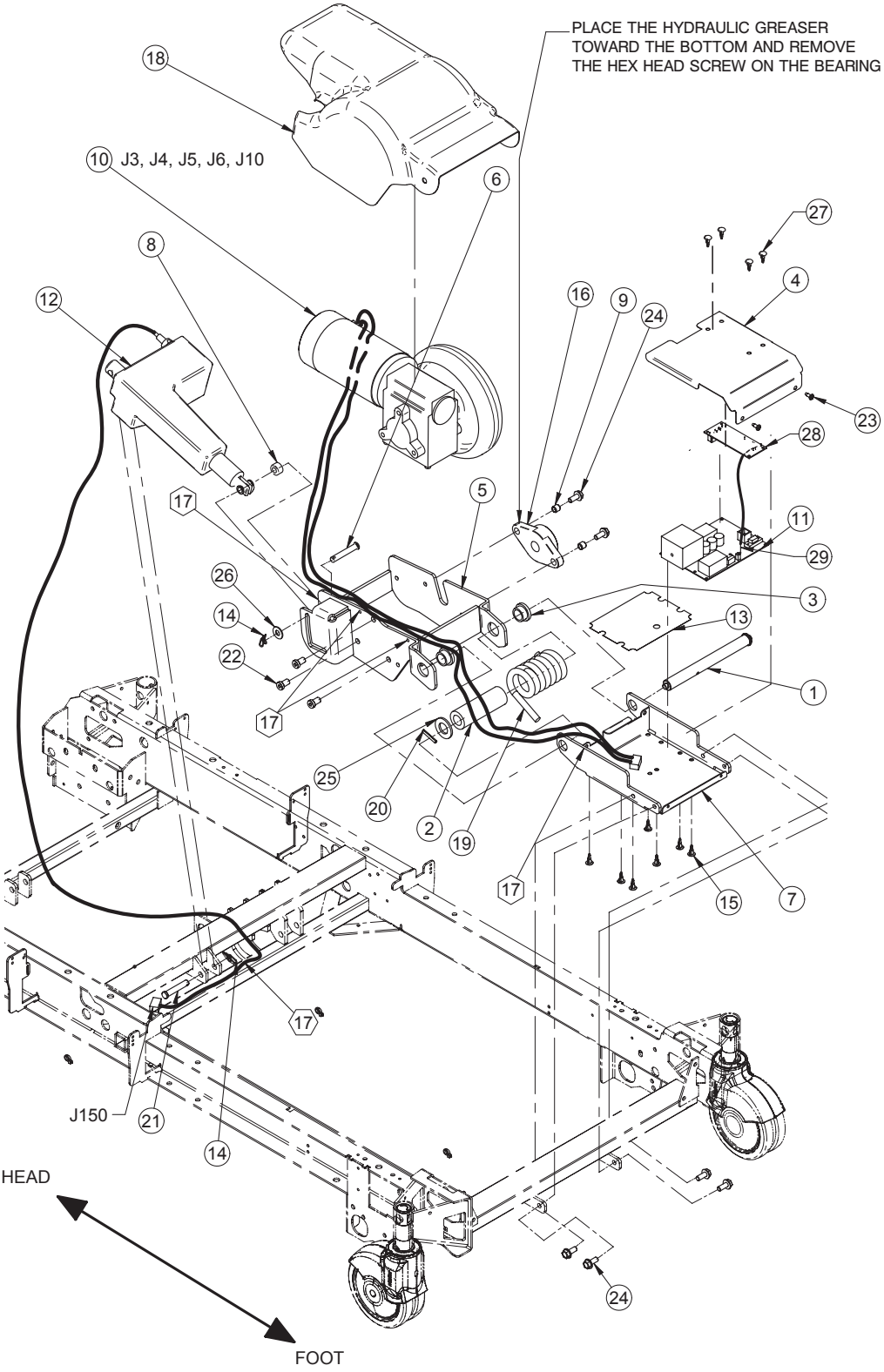

Return To Table of Contents

QDF27-1445 CONNECTIONS				
Cable No.	**Connector No.**	**To**	**Cable No.**	**Connector No.**
QDF27-1445	2-Positions Con.	To	QDF27-1185	J150 (OL270232)

27-1683 CONNECTION				
Cable No.	**Connector No.**	**To**	**Cable No.**	**Connector No.**
QDF27-1010	Red 2-Positions Con.	To	QDF27-1430	J3, J4
QDF27-1010	Black 2-Pos. Con.	To	QDF27-1430	J5, J6 (CSI 1109)
QDF27-1010	4-Positions MTA	To	QDF27-1430	J10 (CSI 1109)

CABLE CONNECTIONS 27-2542 TABLE				
Cable No.	**Connector No.**	**To**	**Cable No.**	**Connector No.**
QDF27-2542	J7, 18-Position Mini Fit	To	QDF27-1430	J7 (CSI 1109)
QDF27-2542	J11, 2-Positions MTA	To	QDF27-1430	J11 (CSI 1109)
QDF27-2542	J7A, 9-Positions MTA	To	QDF75-0240	J7A, 9-Positions MTA
QDF27-2542	J11A, 3-Positions MTA	To	QDF75-0240	J11A, 3-Positions MTA

1	27-0804Z	1
2	27-0898	1
3	27-0915	2
4	27-2545W	1
5	27-1059W	1
6	27-1138	1
7	27-1140W	1
8	27-1150	1
9	27-1636	2
10	27-1683	1
11	QDF27-1430	1
12	QDF27-1445	1
13	QE71-1019	1
14	QDF7878	2
15	QDF8011	7
16	QDF9162	1
17	QDF9518	5
18	QP27-1916-10	1
19	QRT27-0796	1
20	VG10B0636	1
21	VG50B1248	1
22	VV10A1P20-S	3
23	VV83A9G16	2
24	VVB4A1O24	6
25	VW10B264004	1
26	VW10C122802	1
27	QDF2134	4
28	QDF75-0240	1
29	QDF27-2542	1

Return To Table of Contents

OL270016-eng = English
OL270016-tri = English/Français/Español
OL270016-bil = English/Français
OL270016-ger = Deutsch
OL270016-ita = Italiano
OL270016-dut = Nederlands
OL270016-gre = Ελληνική

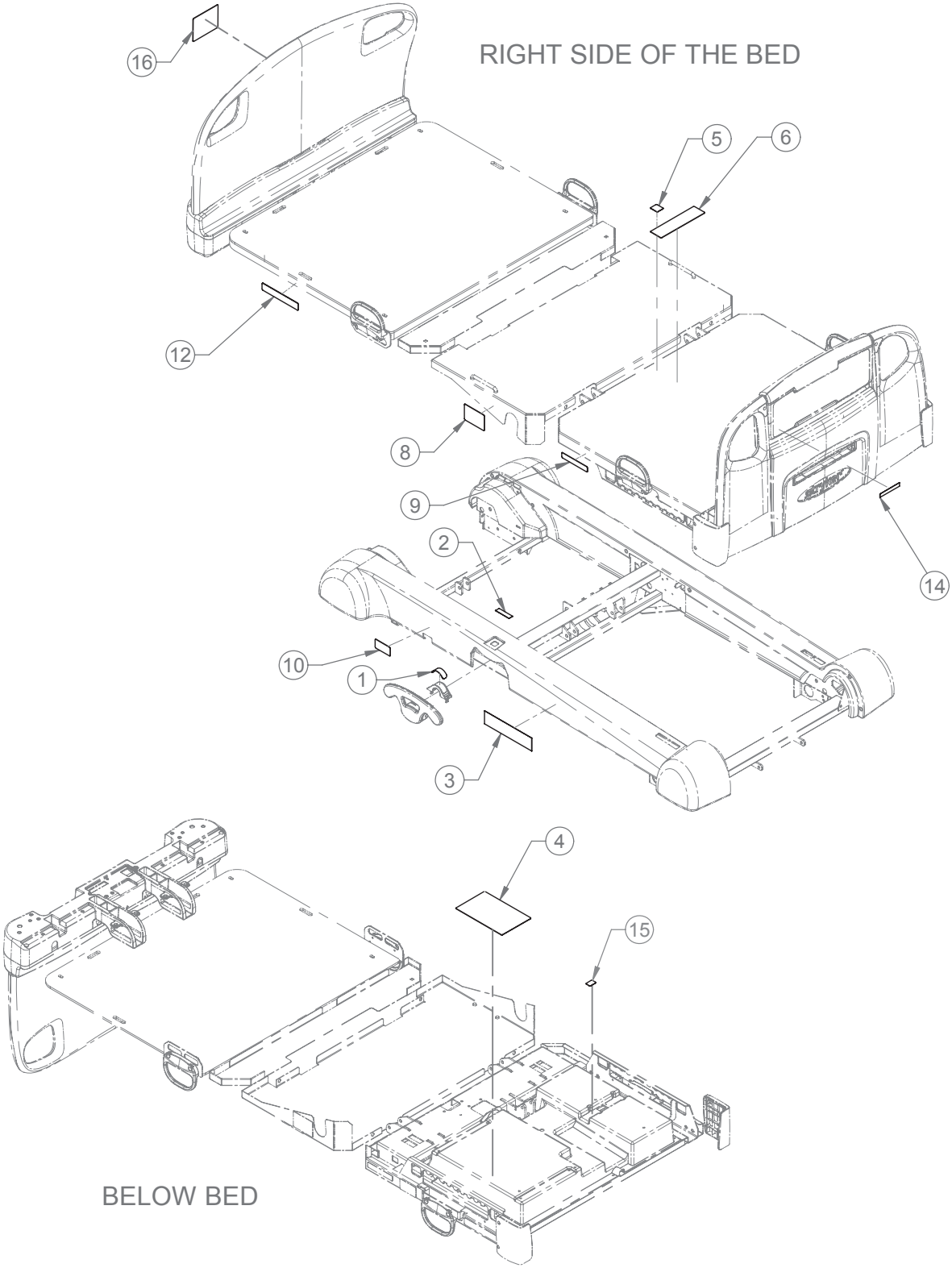

Return To Table of Contents

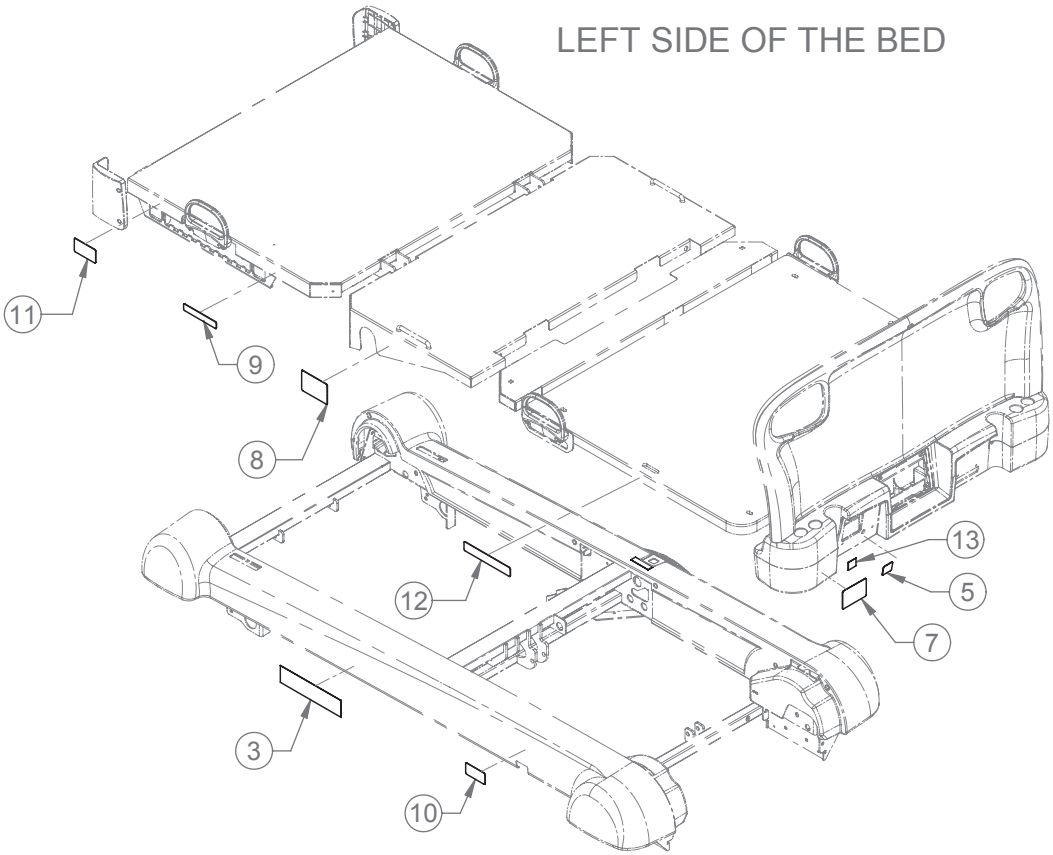

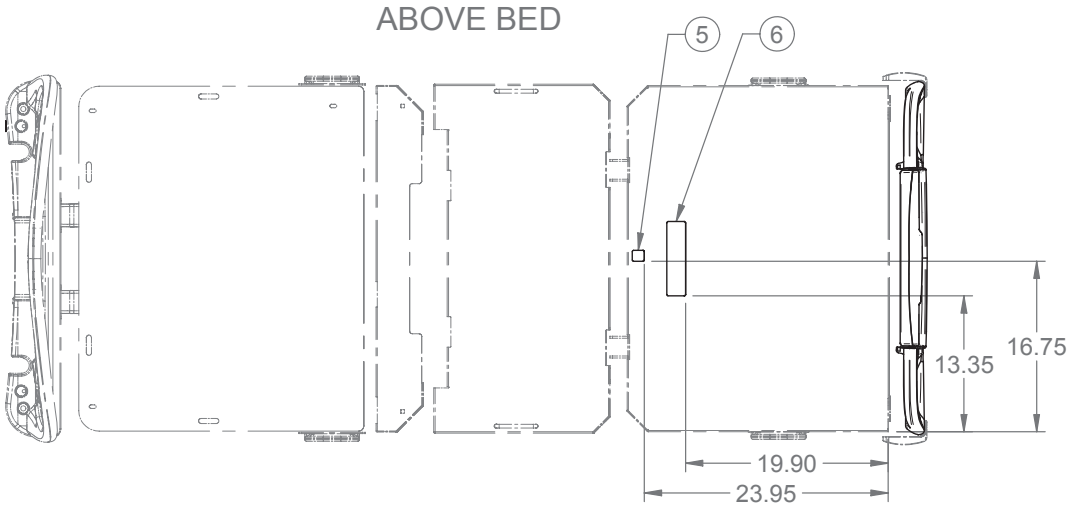

Return To Table of Contents

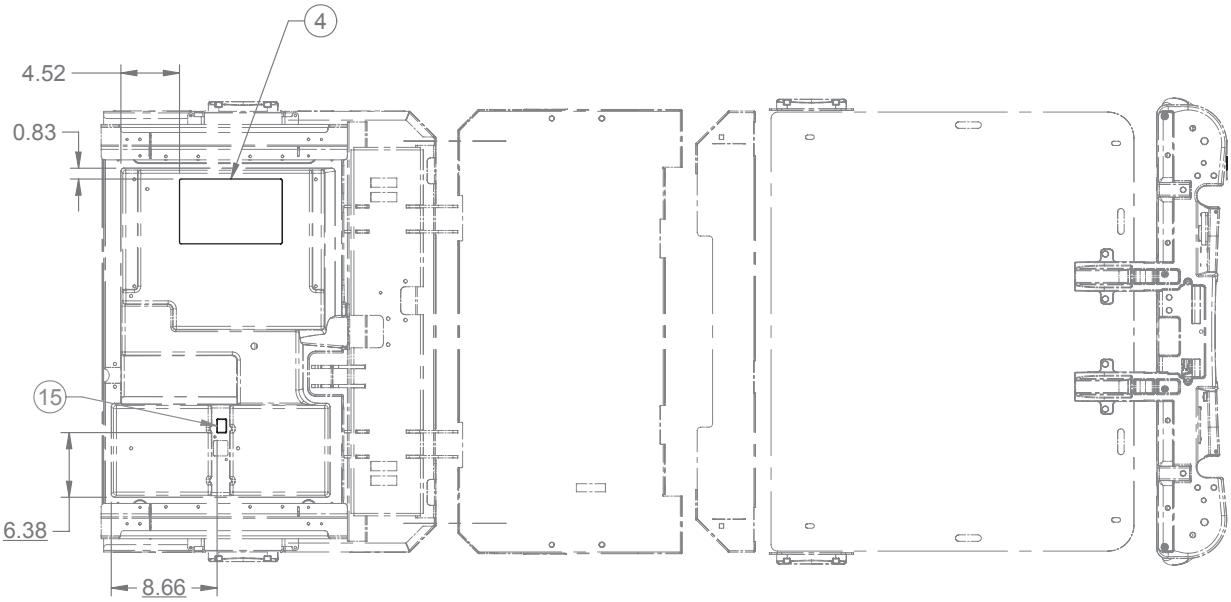

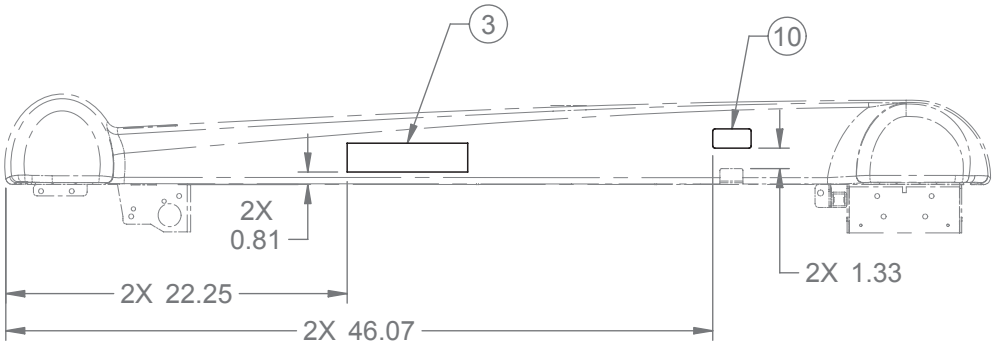

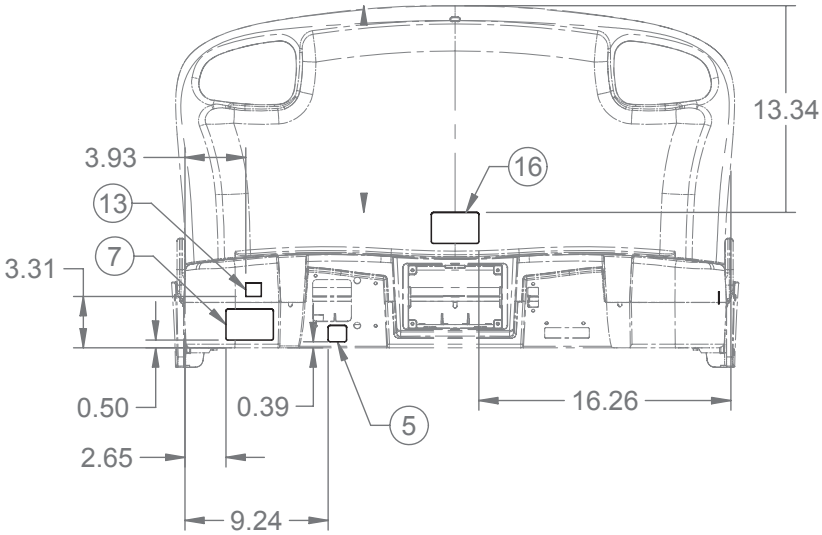

Return To Table of Contents

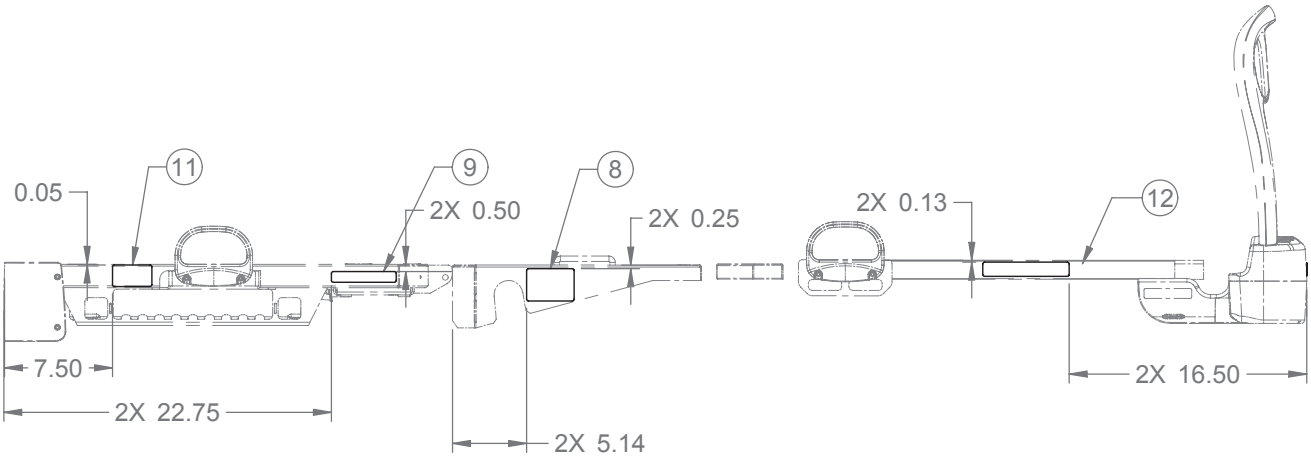

1	QDF27-1256-eng	1 (English) or
	QDF27-1256-bil	1 (English/Français) or
	QDF27-1256-ger	1 (Deutsch) or
	QDF27-1256-ita	1 (Italiano) or
	QDF27-1256-dut	1 (Nederlands) or
	QDF27-1256-gre	1 (Ελληνική)
2	QE71-0947-eng	1 (English) or
	QE71-0947-bil	1 (English/Français) or
	QE71-0947-ger	1 (Deutsch) or
	QE71-0947-ita	1 (Italiano) or
	QE71-0947-dut	1 (Nederlands) or
	QE71-0947-gre	1 (Ελληνική)
3	QE71-1046	1
4	QE14400	1
5	QE18545	1
6	QE71-1207-tri	1 (English/Français/Español) or
	QE71-1207-ger	1 (Deutsch) or
	QE71-1207-ita	1 (Italiano) or
	QE71-1207-dut	1 (Nederlands) or
	QE71-1207-gre	1 (Ελληνική)
7	QE71-0943-tri	1 (English/Français/Español) or
	QE71-0943-ger	1 (Deutsch) or
	QE71-0943-ita	1 (Italiano) or
	QE71-0943-dut	1 (Nederlands) or
	QE71-0943-gre	1 (Ελληνική)
8	QE71-0944-eng	1 (English) or
	QE71-0944-bil	1 (English/Français) or
	QE71-0944-ger	1 (Deutsch) or
	QE71-0944-ita	1 (Italiano) or
	QE71-0944-dut	1 (Nederlands) or
	QE71-0944-gre	1 (Ελληνική)
9	QE71-0949-eng	1 (English) or
	QE71-0949-bil	1 (English/Français) or

Return To Table of Contents

	QE71-0949-ger	1 (Deutsch) or
	QE71-0949-ita	1 (Italiano) or
	QE71-0949-dut	1 (Nederlands) or
	QE71-0949-gre	1 (Ελληνική)
10	QE71-0963-eng	1 (English) or
	QE71-0963-bil	1 (English/Français) or
	QE71-0963-ger	1 (Deutsch) or
	QE71-0963-ita	1 (Italiano) or
	QE71-0963-dut	1 (Nederlands) or
	QE71-0963-gre	1 (Ελληνική)
12	QE71-1010	1
13	QE71-0571	1
14	QE71-1094-eng	1 (English) or
	QE71-1094-bil	1 (English/Français) or
	QE71-1094-ger	1 (Deutsch) or
	QE71-1094-ita	1 (Italiano) or
	QE71-1094-dut	1 (Nederlands) or
	QE71-1094-gre	1 (Ελληνική)
15	QE71-1042-eng	1 (English) or
	QE71-1042-bil	1 (English/Français) or
	QE71-1042-ger	1 (Deutsch) or
	QE71-1042-ita	1 (Italiano) or
	QE71-1042-dut	1 (Nederlands) or
	QE71-1042-gre	1 (Ελληνική)
16	QE71-1257-tri	1 (English/ Français/Español) or
	QE71-1257-ger	1 (Deutsch) or
	QE71-1257-ita	1 (Italiano) or
	QE71-1257-dut	1 (Nederlands) or
	QE71-1257-gre	1 (Ελληνική)

Return To Table of Contents

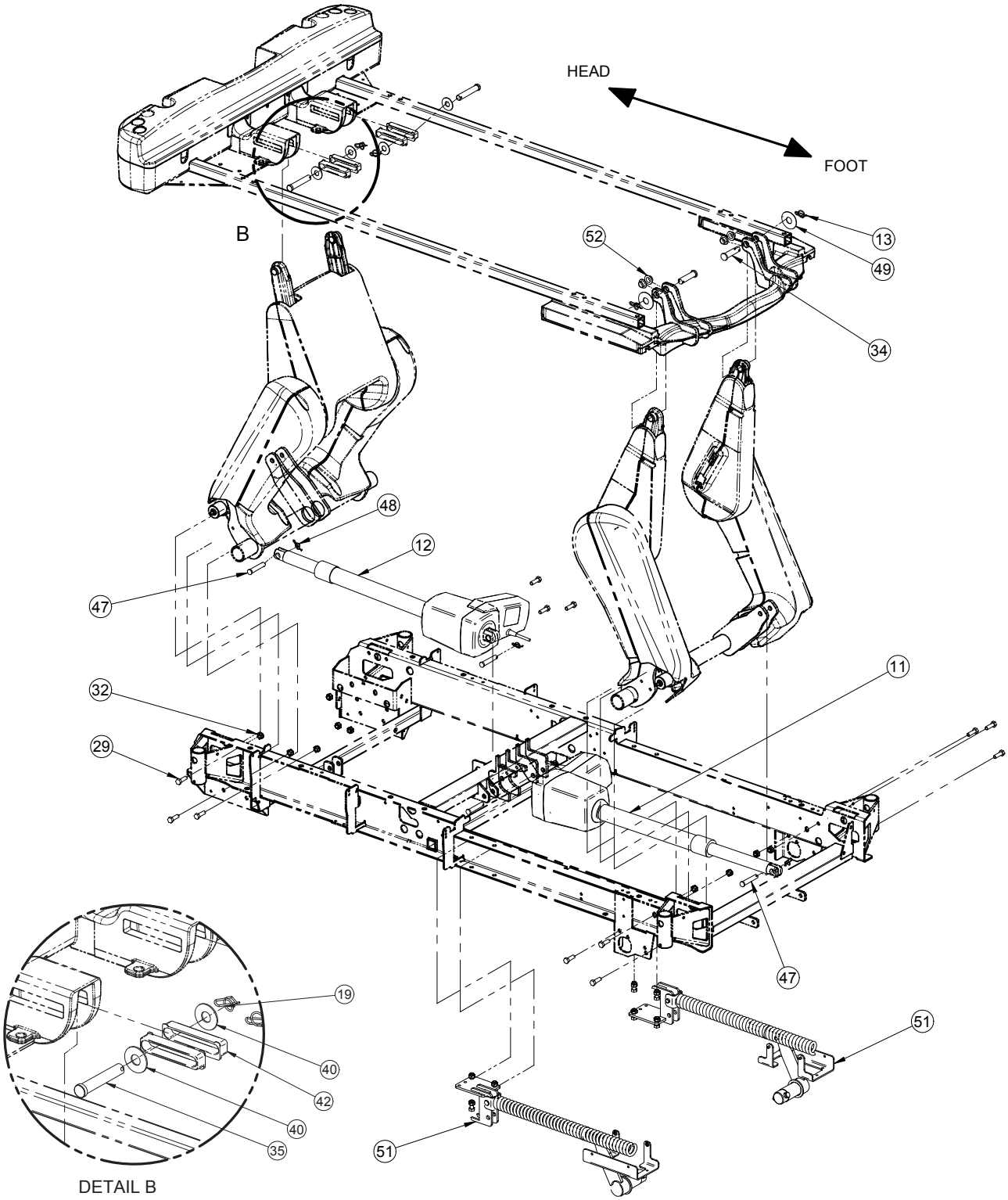

Return To Table of Contents

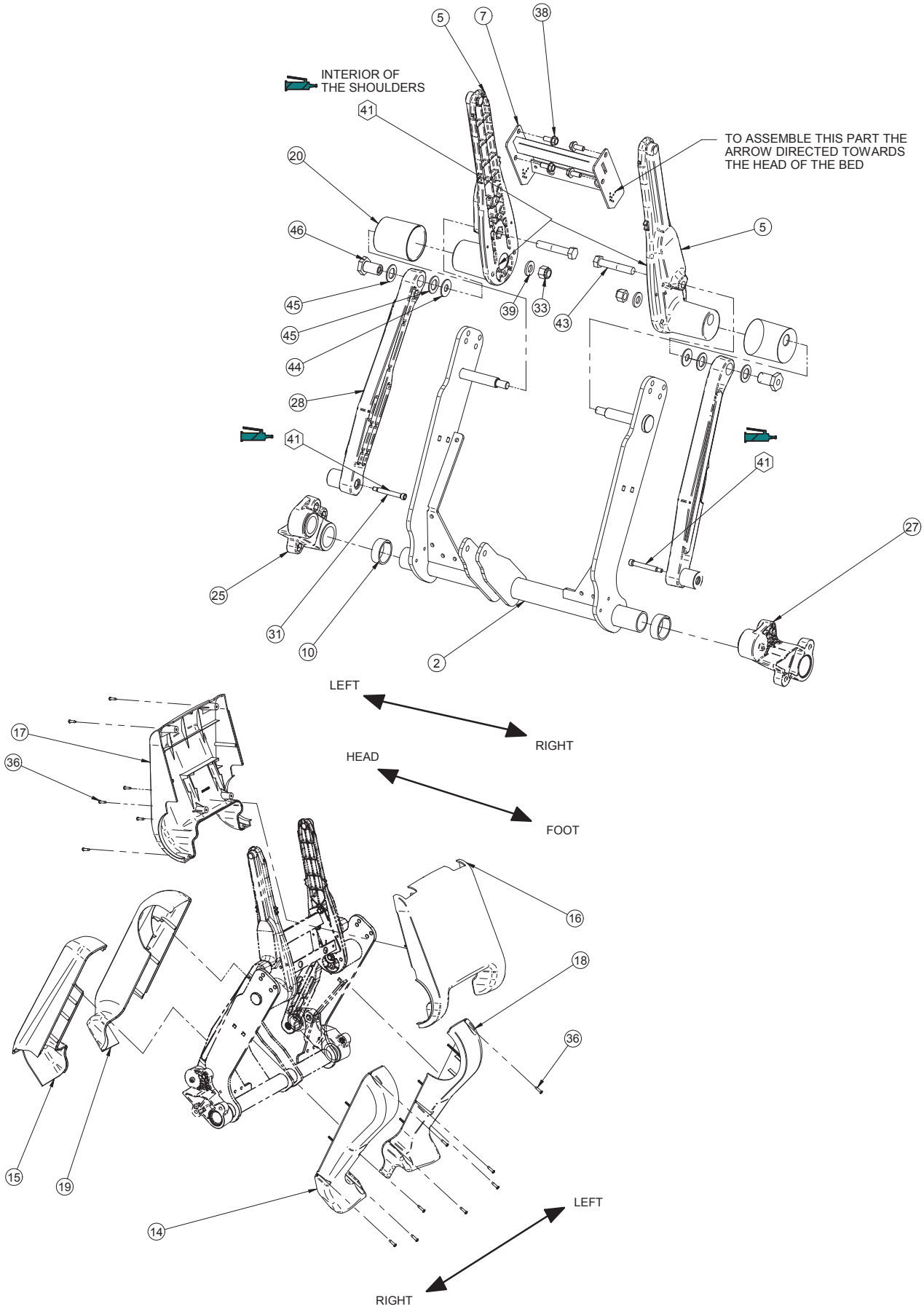

Return To Table of Contents

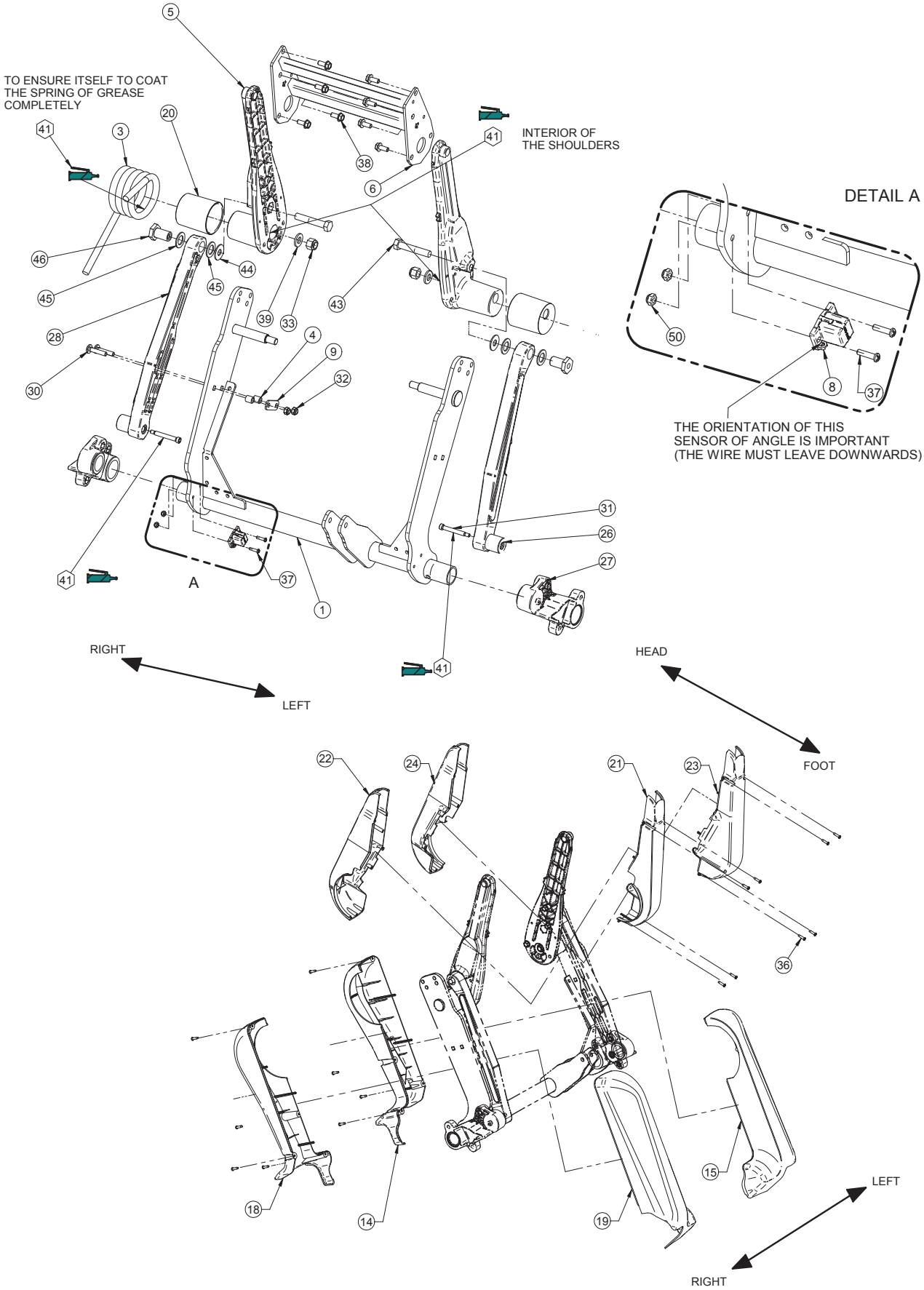

Return To Table of Contents

1	27-0992W	1
2	27-0993W	1
3	QRT27-1011	1
4	27-1012	1
5	QPA27-1013	4
6	27-1977W	1
7	27-1089W	1
8	27-2477	1
9	27-1243Z	2
10	27-1623	4
11	QDF27-1251	1
12	QDF27-1252	1
13	QDF7899	4
14	QP27-0982-10	2
15	QP27-0983-10	2
16	QP27-0984-10	1
17	QP27-0985-10	1
18	QP27-0986-10	2
19	QP27-0987-10	2
20	QP27-1065	4
21	QP27-1236-10	1
22	QP27-1237-10	1
23	QP27-1238-10	1
24	QP27-1239-10	1
25	QPA27-1024	2
26	QPA27-1030	2
27	QPA27-1036	2
28	QPA27-1040	2
29	VB18A1O32	12
30	VB35A1O40	2
31	VD60B1O48	4
32	VE30A1O	14
33	VE30A1R	4
34	VG50A1648	2
35	VG50A1654	2
36	VV23A1G24HL	32
37	VV33A0G24	2
38	VVB4A1O24	12
39	VW10A173308	4
40	VW10C173602	4
41	M0019	1
42	QP27-1830-01	4
43	VB18A1R54-S	4
44	27-2022Z	4
45	QP27-2019	8
46	QDF27-2018Z	4
47	QDF27-2053Z	4
48	QDF7878	4
49	VW10C432002	2
50	VE30A0G	2
51	27-2117	1
52	QDF2100	4

Return To Table of Contents

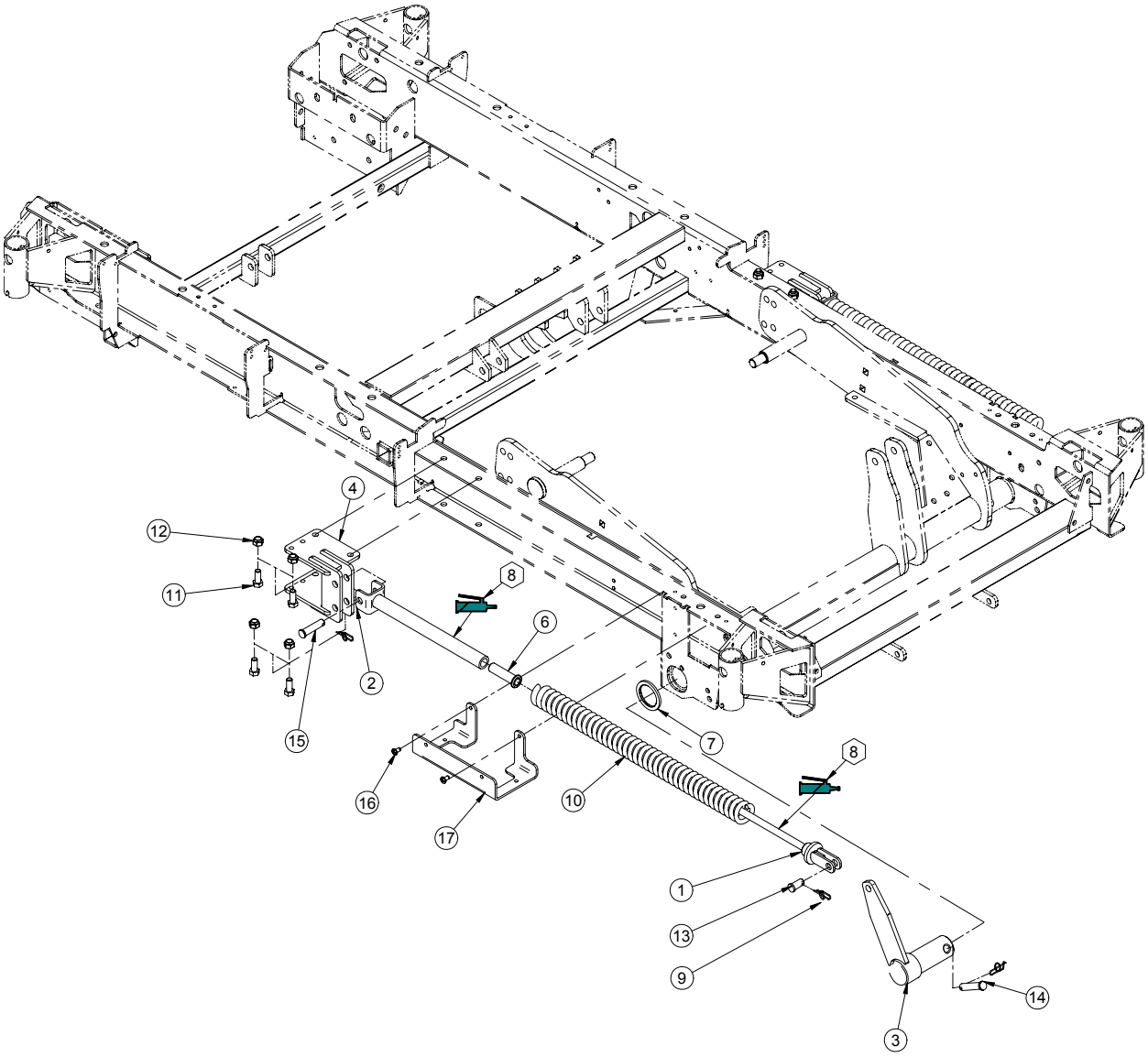

1	27-2096W	2
2	27-2099W	2
3	27-2102W	2
4	27-2107W	2
6	27-2115	2
7	27-2116	2
8*	M0019	1
9	QDF7878	6
10	QRC27-2114	2
11	VB15A1O24	8
12	VE30A1O	8
13	VG50A1228	2
14	VG50A1244	2
15	VG50B1240	2
16	VV83A9G12	4
17	27-2139W	2

Return To Table of Contents

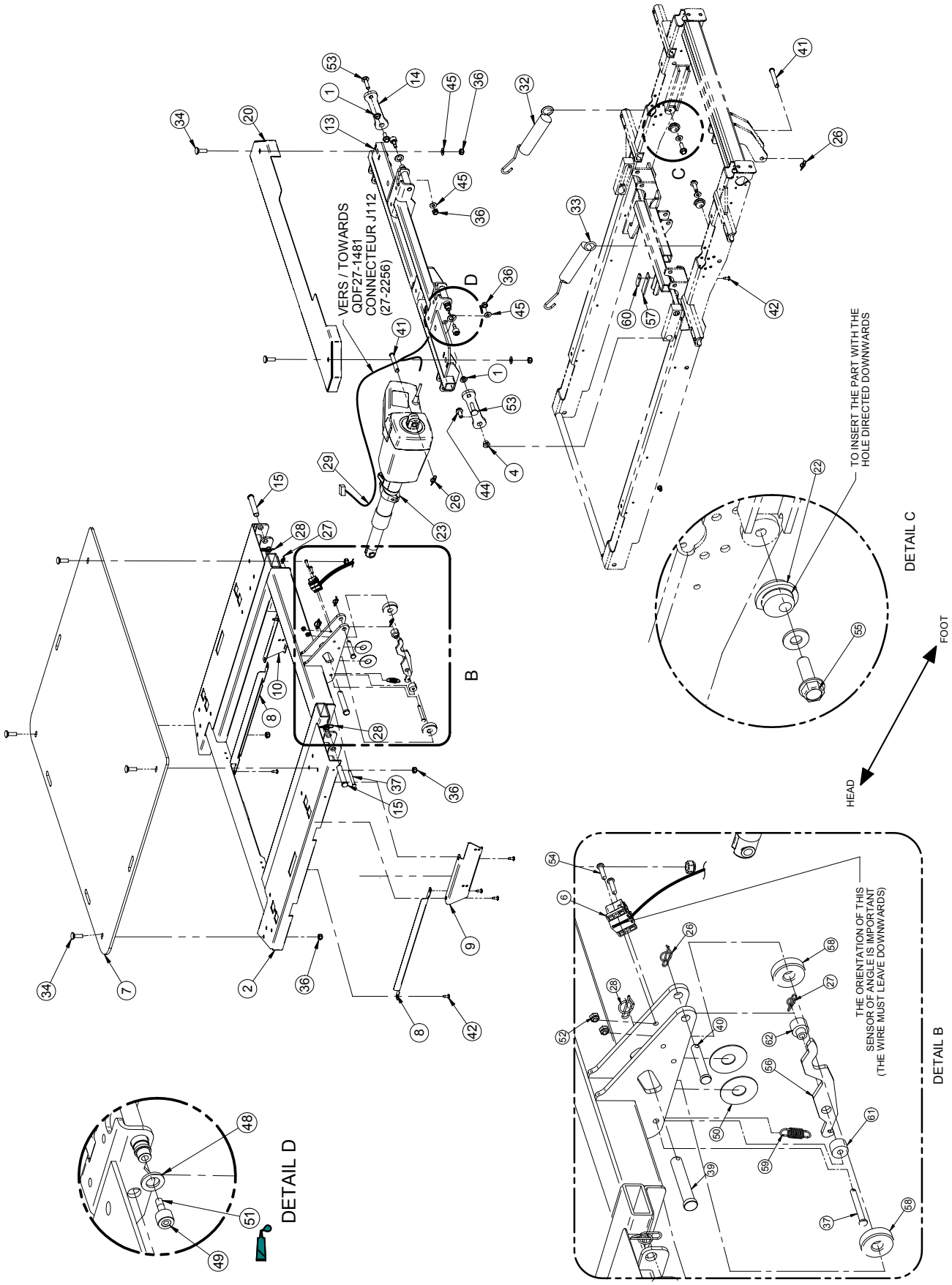

Return To Table of Contents

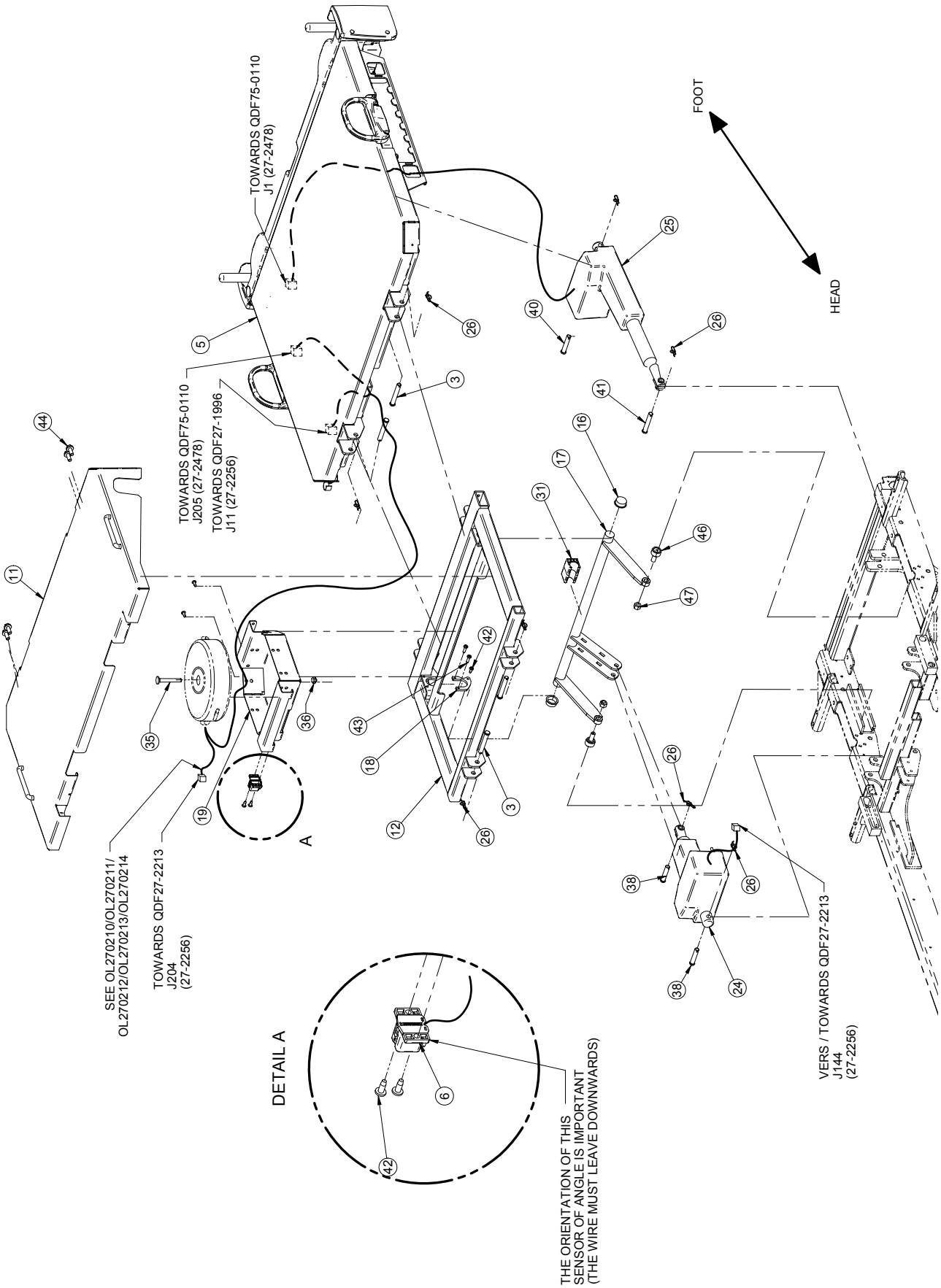

Return To Table of Contents

1	21-3613	2
2	27-2269W	1
3	27-0485	4
4	27-0919	2
5	27-2478-W	1
6	27-2477	2
7	QDF27-1397	1
8	27-1634W	2
9	27-1652W	1
10	27-1667W	1
11	27-1825W	1
12	27-1862W	1
13	27-1888W	1
14	27-1919Z	2
15	27-1920	2
16	27-1925	2
17	27-1932Z	1
18	27-1935Z	1
19	27-1940W	1
20	27-1973W	1
21	27-2015W	2
22	27-2141	2
23	QDF27-1214	1
24	QDF27-1215	1
25	QDF27-1216	1
26	QDF7878	9
27	QDF7898	2
28	QDF7899	3
29*	QDF9518	1
30	QP27-1435-10	2
31	QP27-1958	1
32	QRT27-2020	1
33	QRT27-2026	1
34	VB35A1O32	6
35*	VB35A1O50	1
36	VE30A1O	9
37	VG50A0848	2
38	VG50A1244	2
39	VG50A1654	1
40	VG50B1248	2
41	VG50B1250	2
42	VV83A9G16	14
43	VV83A9G24	6
44	VVB4A1O24	6
45	VW10A10	6
46	QDF2098	2
47	VE39A0P	2
48	27-2063	2
49	QDF2110	2
50	VW10C432002	2
51*	M0008	.03ml
52	VE30A0G	2
53	VB35A1O36	2
54	VV33A0G24	2
55	VVB4A1O32	2
56	27-2223Z	1
57	27-2217	1
58	27-2227	2
59	QRE27-2218	1
60	27-2219Z	1
61	27-2221	1
62	27-2220	1
63	QDF2132	1

Return To Table of Contents

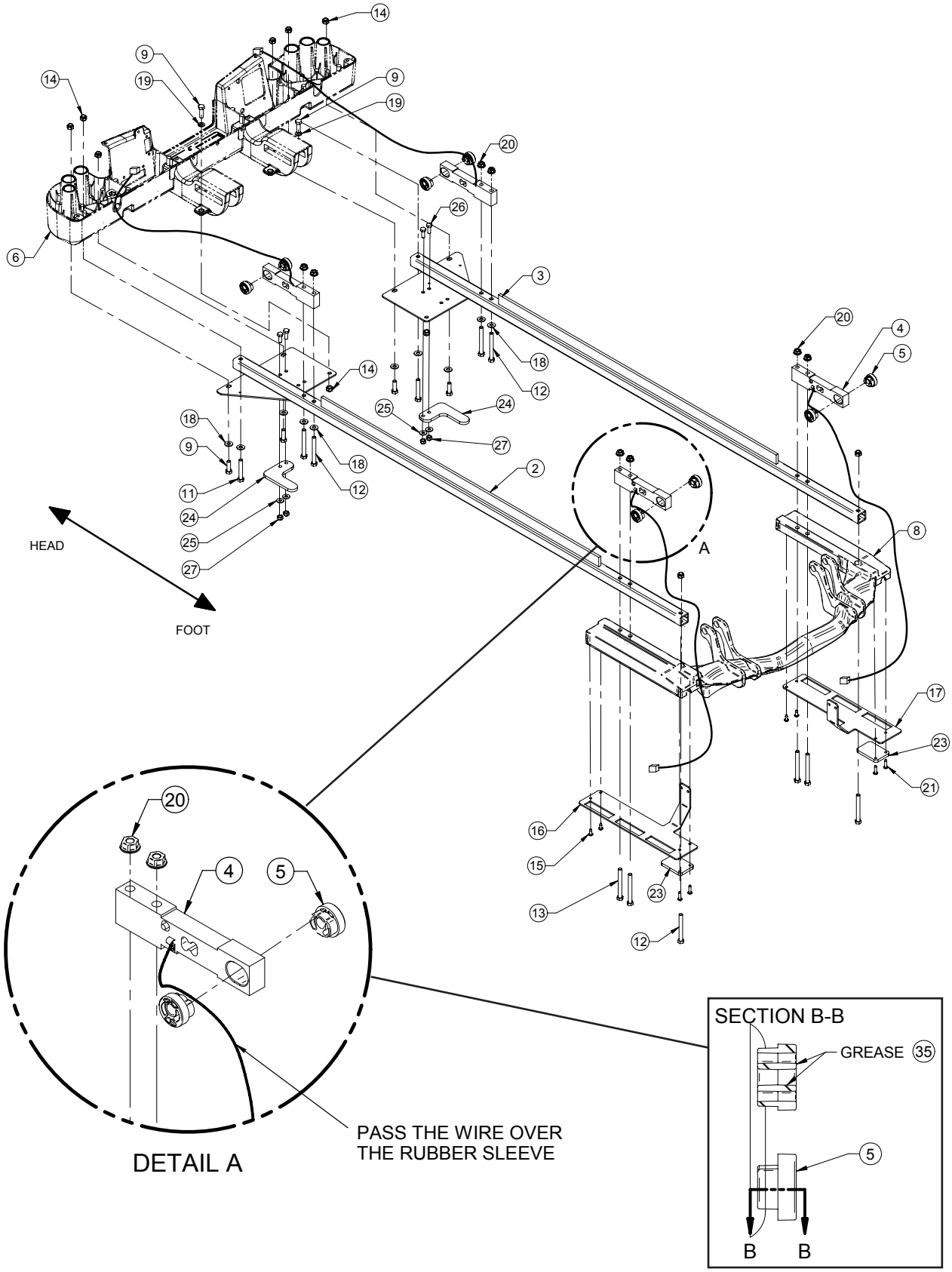

Return To Table of Contents

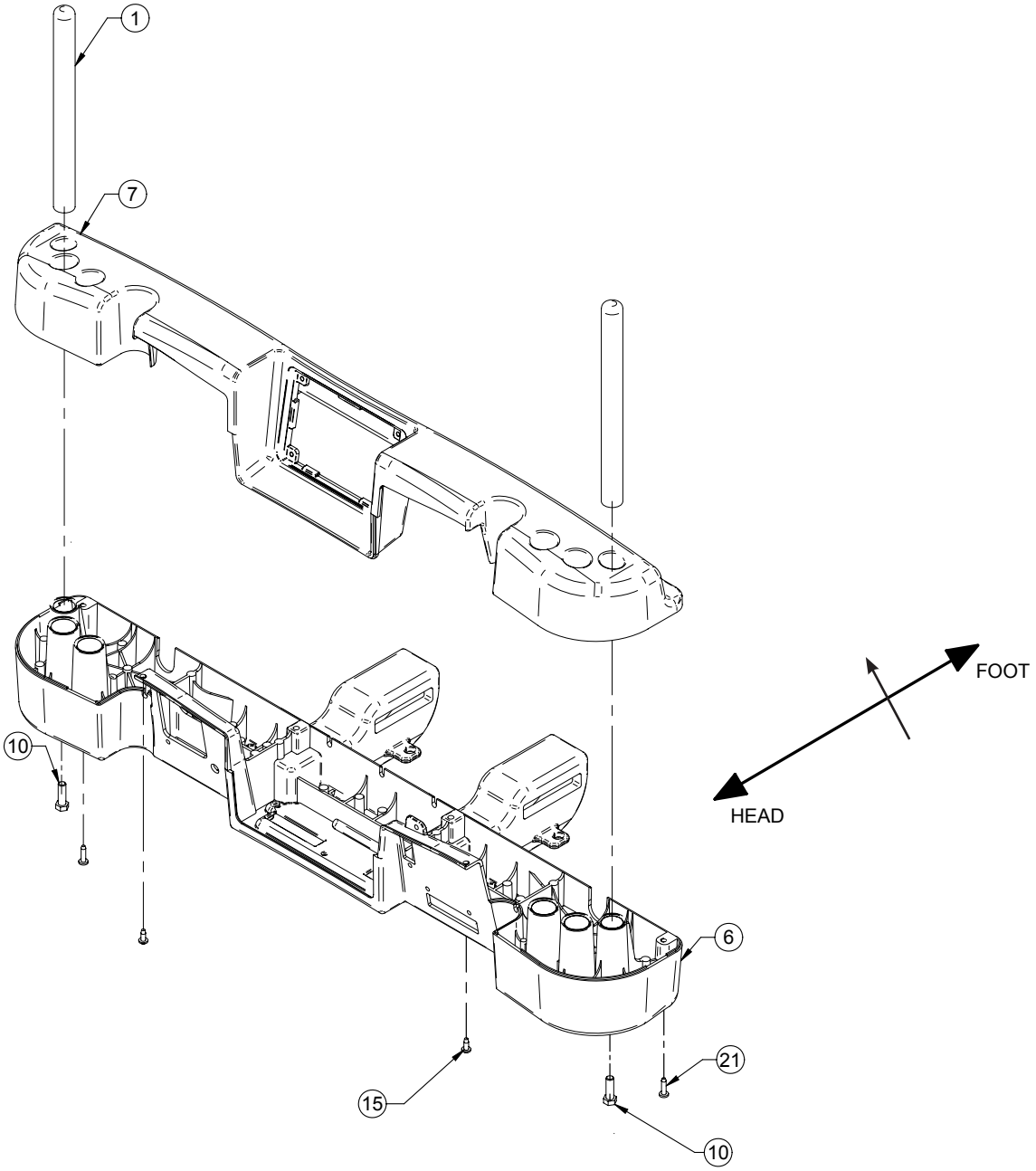

Return To Table of Contents

1	27-1180C	2
2	27-1310W	1
3	27-1368W	1
4	QDF27-1372	4
5	QP27-1469	8
6	QPA27-1290W	1
7	27-1291W	1
8	27-1426W	1
9	VB15A1O32	6
10	VB15A1O32-S	2
11	VB15A1O48	2
12	VB15A1O54	6
13	VB15A1O56	4
14	VE30A1O	10
15	VV83A9G16	6
16	27-1806W	1
17	27-1385W	1
18	VW10A10	10
19	VW20A10	2
20	VE78A10	8
21	VV83A9G24	6
22	M0019	.030 ml
23	27-2143W	2
24	27-2144W	2
25	VW10A08	4
26	VB15A1N24	4
27	VE30A1N	4

Return To Table of Contents

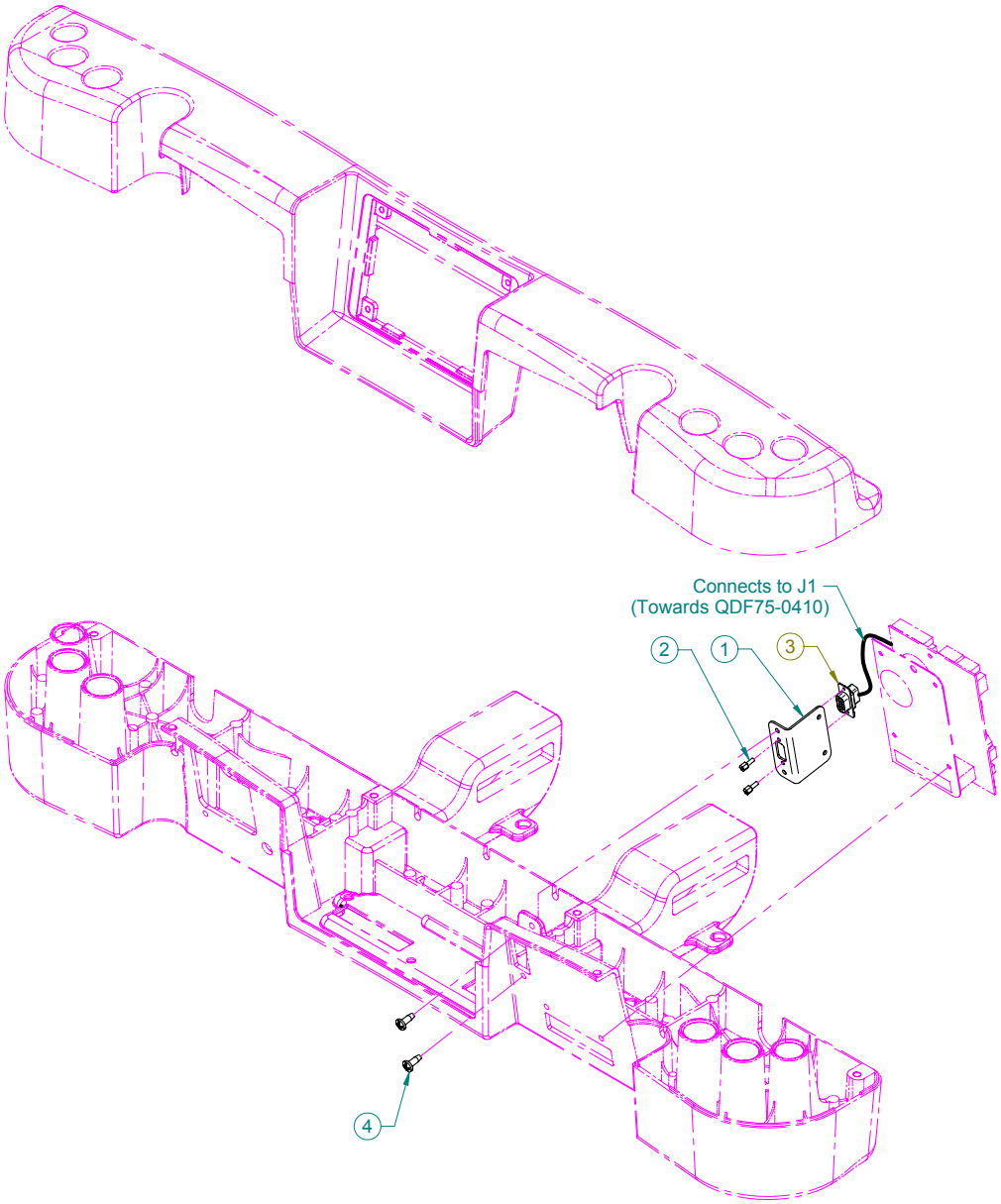

1	27-1520W	1
2	QDF2056	2
3	QDF27-2432	1
4	VV83A9G16	2

Return To Table of Contents

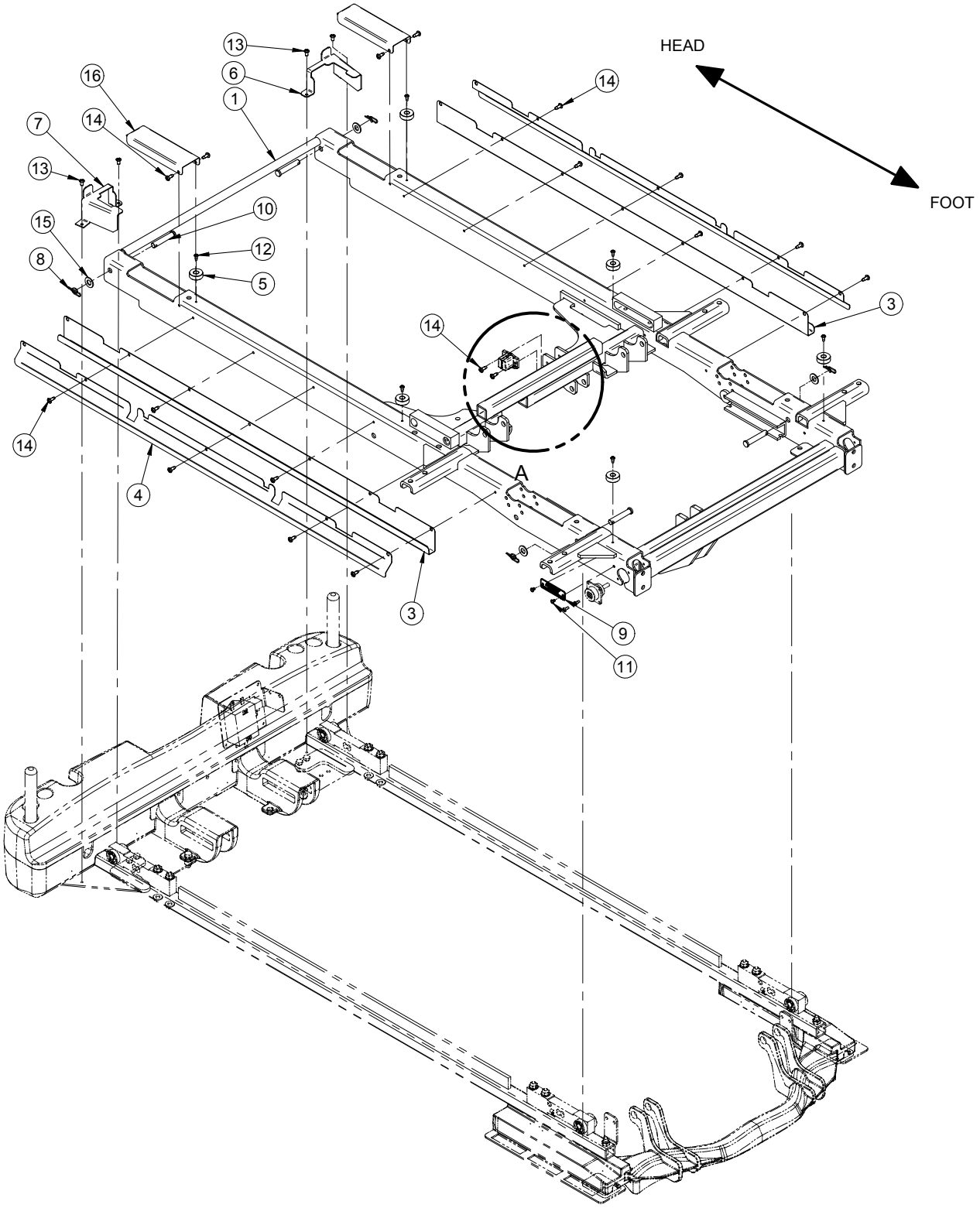

Return To Table of Contents

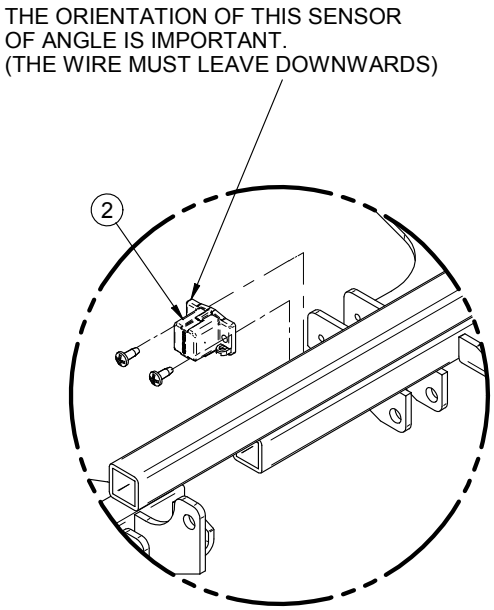

DETAIL A

1	27-02598W	1
2	27-2477	1
3	27-1433W	2
4	27-1434W	2
5	QP27-1760	6
6	27-1850W	1
7	27-1851W	1
8	QDF7878	4
9	QE71-1181	1
10	VG50B1248	4
11	VR11H43	2
12	VV83A9E12	7
13	VV83A9G12	4
14	VV83A9G16	18
15	VW10A12	4
16	27-2005W	2
17	VV33A0G24	2
18	VE30A0B	2

Return To Table of Contents

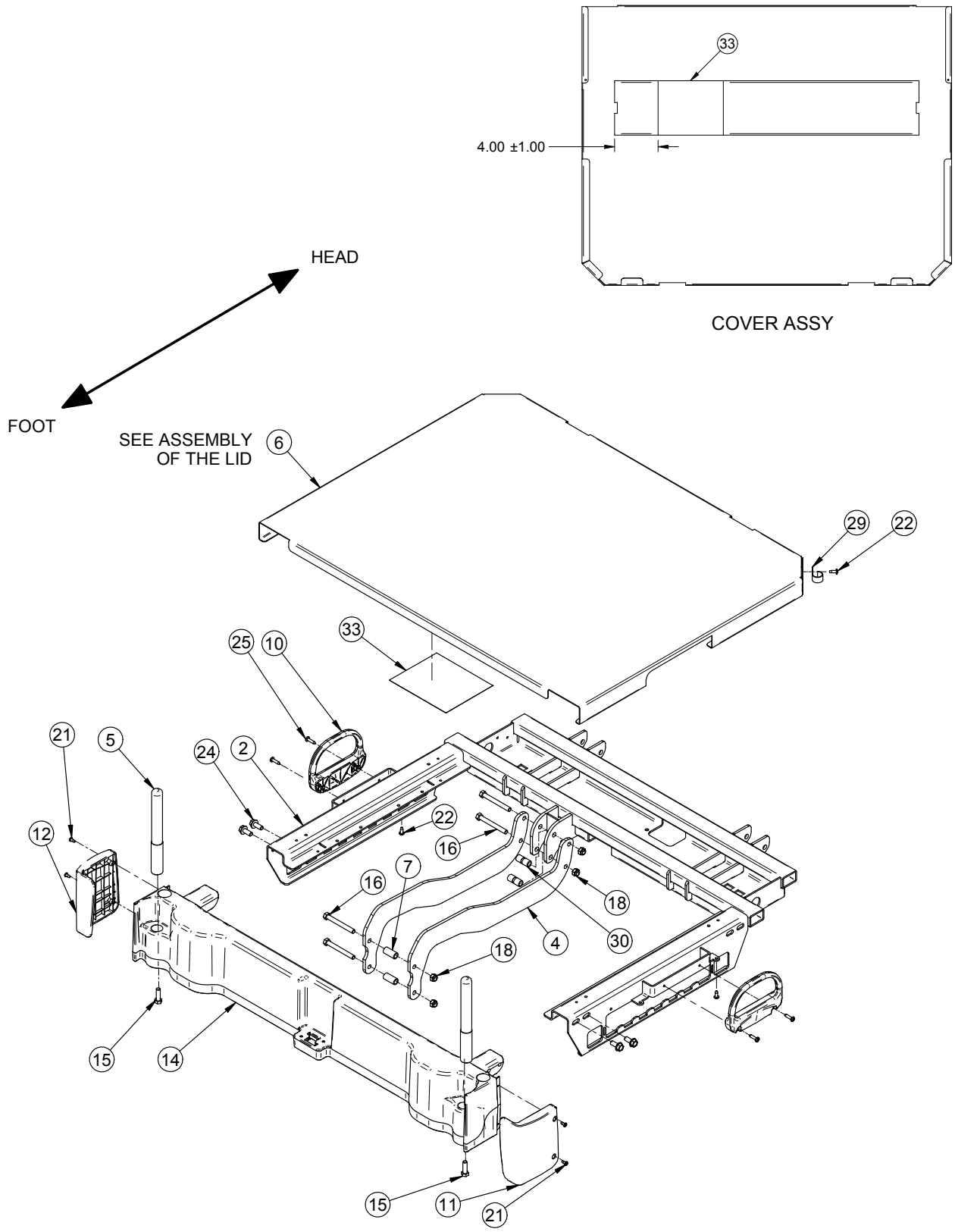

Return To Table of Contents

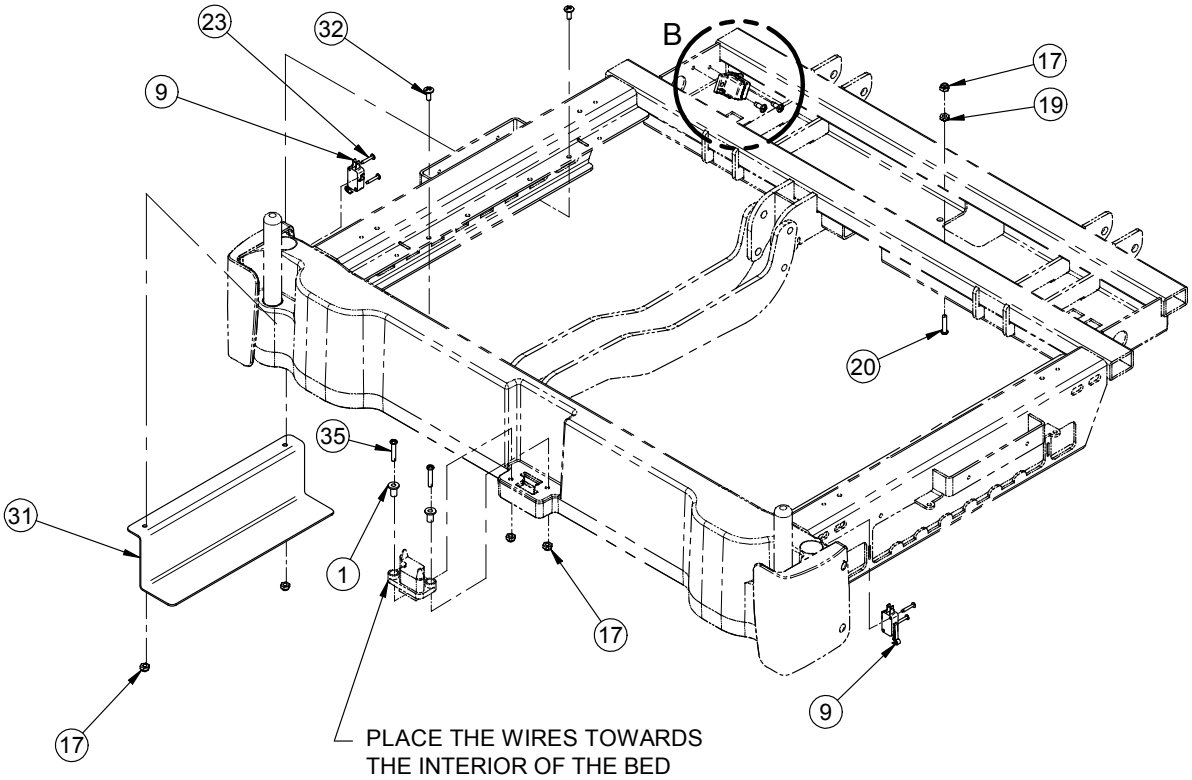

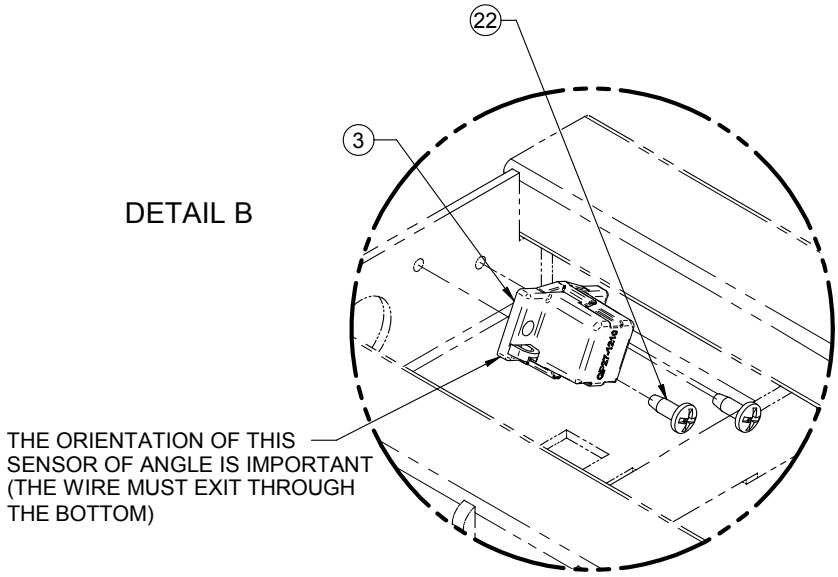

Return To Table of Contents

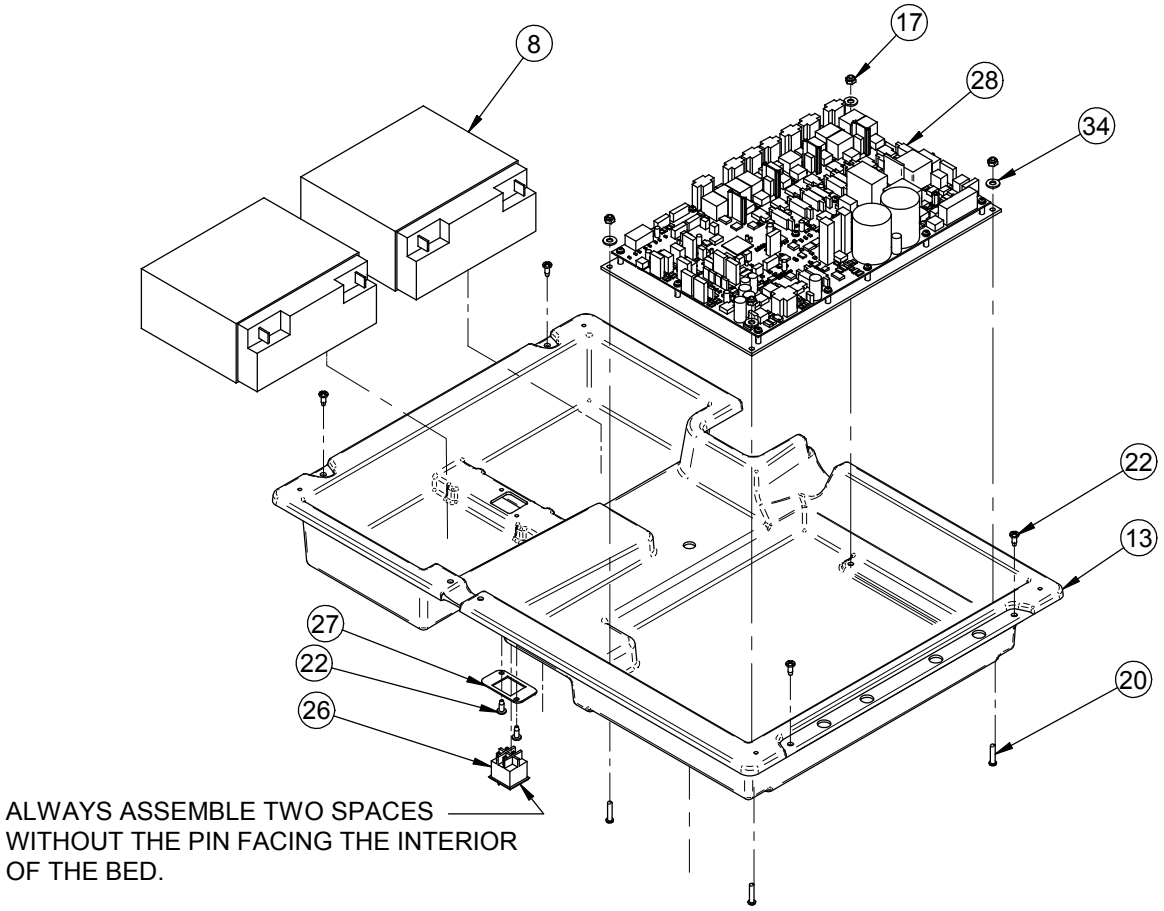

	SW1 ON / ON QDF75-0110			
	1	**2**	**3**	**4**
ON	Option with *i*Bed	Option with *i*-Audio	Option with ZOOM®	Option with *i*-Doc
OFF	Option without *i*Bed	Option without *i*-Audio	Option without ZOOM®	Option without *i*-Doc

Return To Table of Contents

1	25-0527Z	2
2	27-0112W	1
3	27-2477	1
4	27-1579W	2
5	27-1833C	2
6	27-1606W	1
7	27-1710Z	2
8	QDF9188	2
9	QDF9535	2
10	QP27-1435-10	2
11	QP27-1439-05	1
12	QP27-1440-05	1
13	QP27-1597	1
14	QPA27-1576-W	1
15	VB15A1O32-S	2
16	VB15A1O54	4
17	VE30A0G	9
18	VE30A1O	4
19	VE80A0G	1
20	VV33A0G28	5
21	VV83A9E12	4
22	VV83A9G16	11
23	VV87A9A24	4
24	VVB4A1O24	4
25	VV83A9G24	4
26	QDF2089	1
27	27-1972Z	1
28	QDF75-0110	1
29	QDF2091	1
30	27-2058Z	2
31	27-1858W	1
32	VV37A0G16	2
33	QE71-1061	1
34	VW10C081802	4
35	VV31A0G32	2

Return To Table of Contents

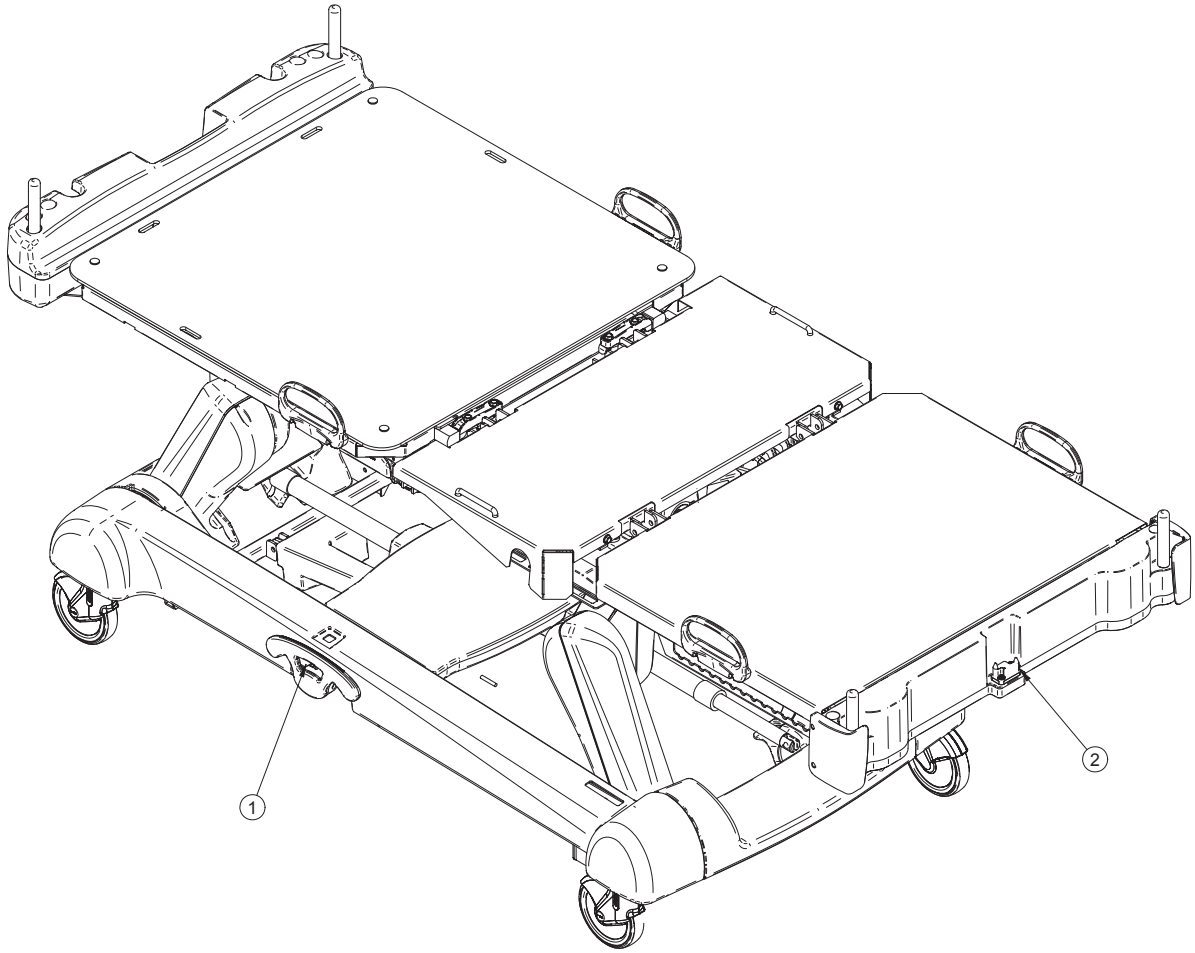

1	27-1660	1
2	27-2643	1

Return To Table of Contents

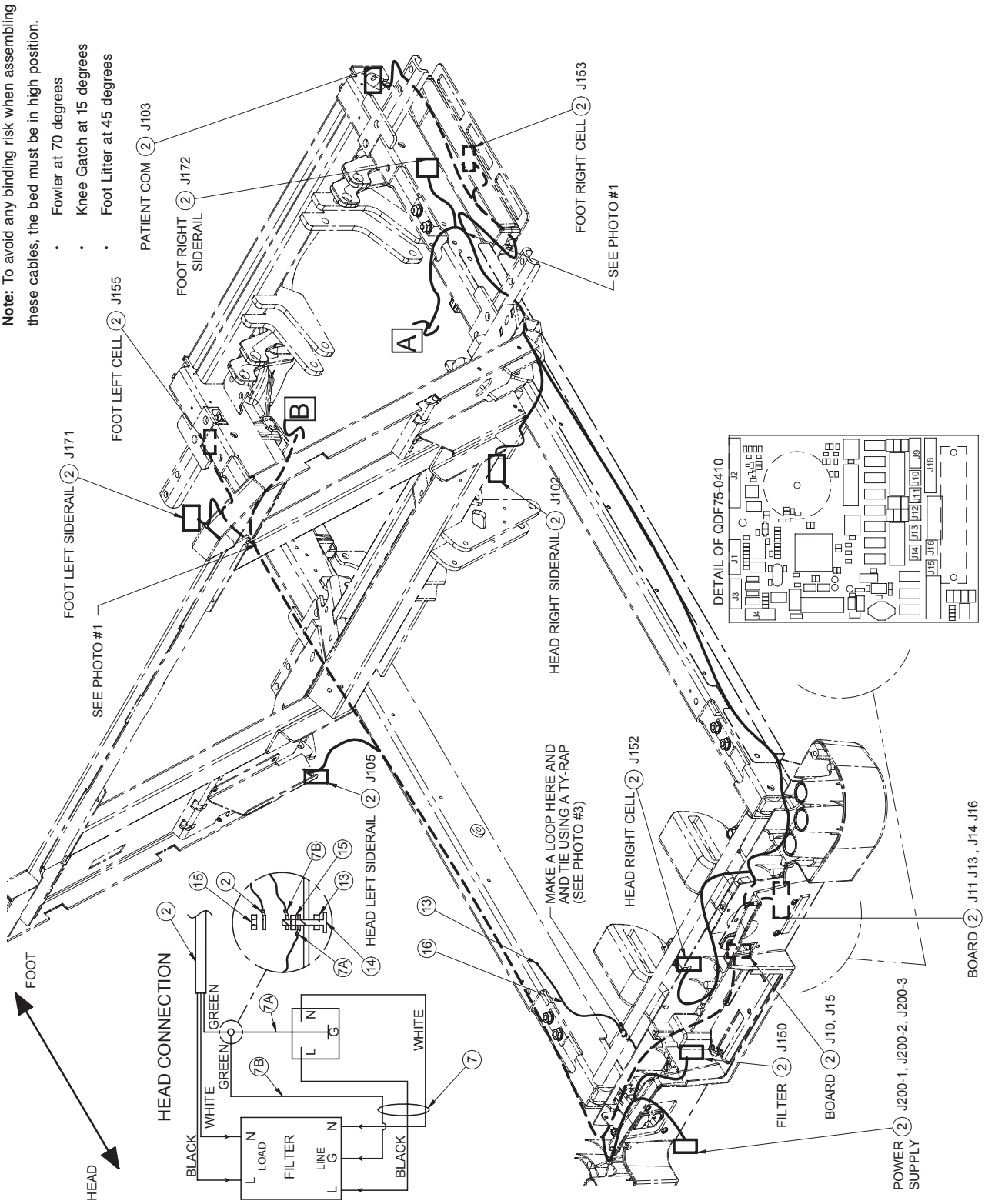

Return To Table of Contents

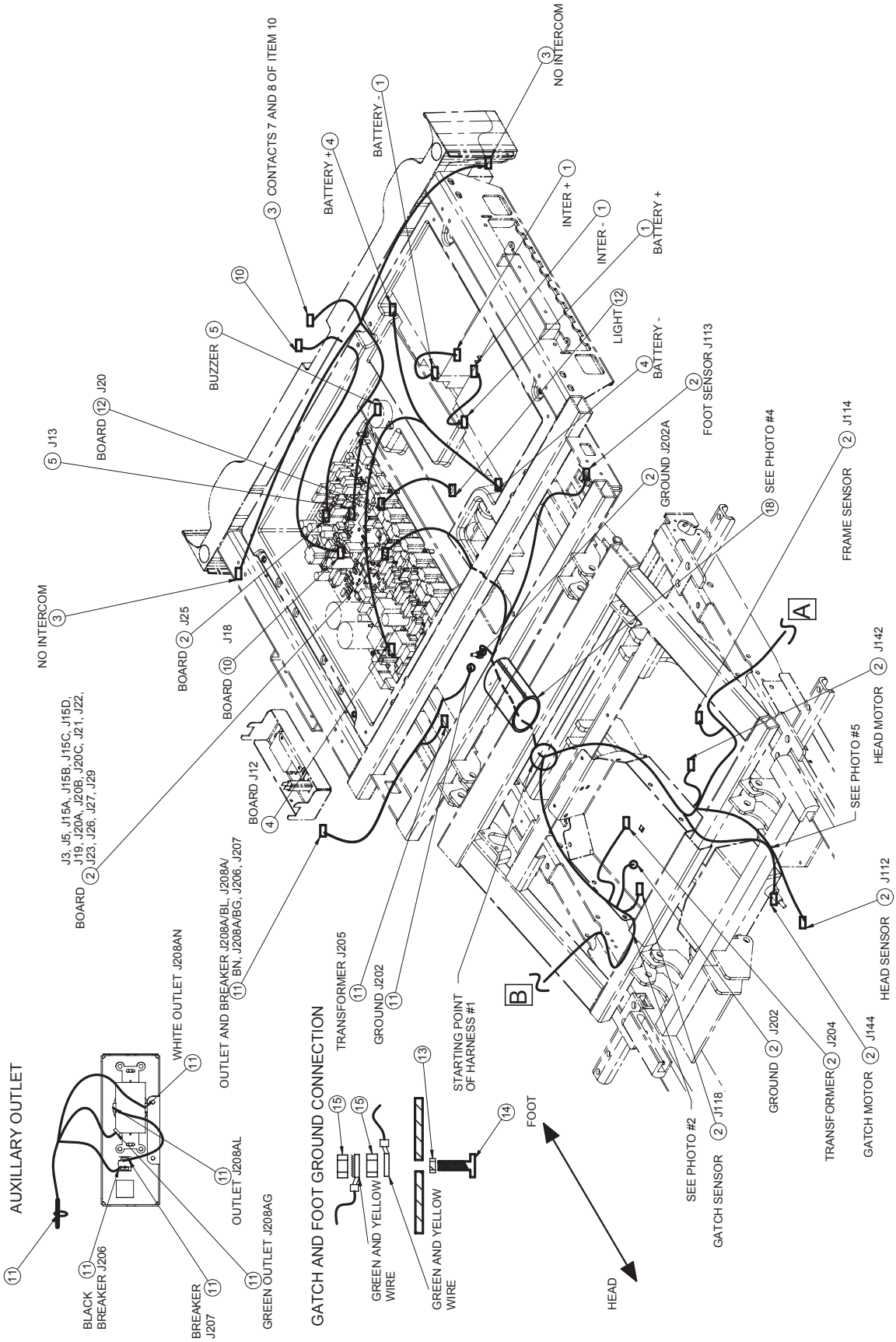

Return To Table of Contents

Photo #1

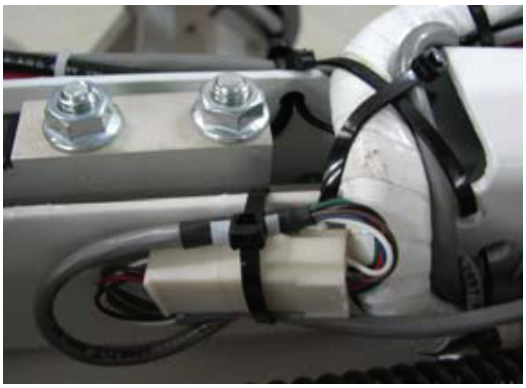

Photo #2

Photo #3

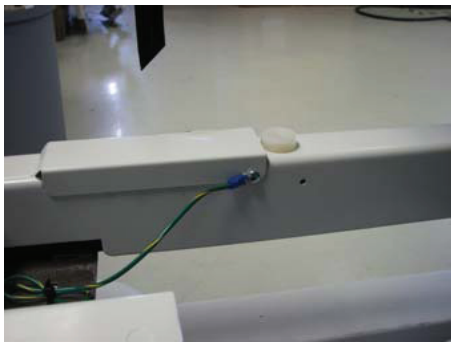

Photo #4

Photo #5

QDF27-1381 CONNECTION				
Cable No.	**Connector No.**	**To**	**Cable No.**	**Connector No.**
QDF27-1381	Red Grommet	To	QDF9188	Battery A Pole + (27-2478)
QDF27-1381	Terminal	To	QDF9188	Switch (27-2478)
QDF27-1381	Terminal	To	QDF9188	Switch (27-2478)

QDF27-1646 CONNECTION				
Cable No.	**Connector No.**	**To**	**Cable No.**	**Connector No.**
QDF27-1646	Mini Fit	To	QDF75-0110	J12 DC Board
QDF27-1646	Black Grommet	To	QDF9188	Battery B Pole + (27-2478)
QDF27-1646	White Grommet	To	QDF9188	Battery A Pole – (27-2478)

QDF27-2025 CONNECTION				
Cable No.	**Connector No.**	**To**	**Cable No.**	**Connector No.**
QDF27-2025	Light	To	QDF75-0110	J20 DC Board

Return To Table of Contents

QDF27-2213 CONNECTION				
Cable No.	**Connector No.**	**To**	**Cable No.**	**Connector No.**
QDF27-2213	J22	To	QDF75-0110	J22 DC Board
QDF27-2213	J21	To	QDF75-0110	J21 DC Board
QDF27-2213	J20A	To	QDF75-0110	J20A DC Board
QDF27-2213	J20B	To	QDF75-0110	J20B DC Board
QDF27-2213	J20C	To	QDF75-0110	J20C DC Board
QDF27-2213	J19	To	QDF75-0110	J19 DC Board
QDF27-2213	J29	To	QDF75-0110	J29 DC Board
QDF27-2213	J15A	To	QDF75-0110	J15A DC Board
QDF27-2213	J15B	To	QDF75-0110	J15B DC Board
QDF27-2213	J15C	To	QDF75-0110	J15C DC Board
QDF27-2213	J15D	To	QDF75-0110	J15D DC Board
QDF27-2213	J204	To	QDF27-2038	Transfo J204
QDF27-2213	J27	To	QDF75-0110	J27 DC Board
QDF27-2213	J3	To	QDF75-0110	J3 DC Board
QDF27-2213	J5	To	QDF75-0110	J5 DC Board
QDF27-2213	J113	To	QDF75-0140	Foot Sensor (27-2478)
QDF27-2213	J202	To	---	Gatch Ground
QDF27-2213	J114	To	QDF75-0140	Trend Sensor
QDF27-2213	J153	To	QDF27-1372	Right Foot Cell
QDF27-2213	J103	To	27-0264	Removable Control
QDF27-2213	J172	To	QDF27-1208	Right Foot Siderail
QDF27-2213	J102	To	QDF27-2212	Right Head Siderail
QDF27-2213	J152	To	QDF27-1372	Right Head Cell
QDF27-2213	J202A	To	---	Foot Ground
QDF27-2213	J16	To	QDF75-0410	OL270254
QDF27-2213	J15	To	QDF75-0410	OL270254
QDF27-2213	J14	To	QDF75-0410	OL270254
QDF27-2213	J13	To	QDF75-0410	OL270254
QDF27-2213	J10	To	QDF75-0410	OL270254
QDF27-2213	J11	To	QDF75-0410	OL270254
QDF27-2213	J144	To	QDF27-1215	Gatch Motor
QDF27-2213	J142	To	QDF27-1214	Fowler Motor
QDF27-2213	J112	To	QDF75-0140	Fowler Sensor
QDF27-2213	J118	To	QDF75-0140	Gatch Sensor
QDF27-2213	J155	To	QDF27-1372	Left Foot Cell
QDF27-2213	J171	To	QDF27-1208	Left Foot Siderail
QDF27-2213	J105	To	QDF27-2212	Left Head Siderail
QDF27-2213	J150	To	QDF27-1372	Left Head Cell
QDF27-2213	J23	To	QDF75-0110	J23 DC Board
QDF27-2213	J26	To	QDF75-0110	J26 DC Board
QDF27-2213	J200A Black	To	QDF9571	Line “L”
QDF27-2213	J200B White	To	QDF9571	Line “N”
QDF27-2213	J200C Green	To	Ground	Head Screw

Return To Table of Contents

QDF27-1607 CONNECTION				
Cable No.	**Connector No.**	**To**	**Cable No.**	**Connector No.**
QDF27-1607	Con. MTA 5 Pos.	To	QDF75-0110	J25 DC Board
QDF27-1607	Contact	To	QDF27-1213	Contact 7 or 8
QDF27-1607	Contact	To	QDF27-1213	Contact 7 or 8
QDF27-1607	Terminal	To	QDF9535	Right Limit Switch (27-2478) No/Com
QDF27-1607	Terminal	To	QDF9535	Right Limit Switch (27-2478) Com/No
QDF27-1607	Terminal	To	QDF9535	Left Limit Switch (27-2478) No/Com
QDF27-1607	Terminal	To	QDF9535	Left Limit Switch (27-2478) Com/No

QDF5095 CONNECTION				
Cable No.	**Connector No.**	**To**	**Cable No.**	**Connector No.**
QDF5095	Con. MTA	To	QDF75-0110	J13 DC Board
QDF5095	Buzzer	To	Electrical Box	See Position on Drawing

QDF27-1524 CONNECTION				
Cable No.	**Connector No.**	**To**	**Cable No.**	**Connector No.**
QDF27-1524	Black 90º Terminal	To	QDF9571	Line “L”
QDF27-1524	White 90º Terminal	To	QDF9571	Line “N”
QDF27-1524	Green 90º Terminal	To	QDF9571	Line “E”
QDF27-1524	Black Right Terminal	To	QDF9574	“L” (Power Supply
QDF27-1524	White Right Terminal	To	QDF9574	“N” (Power Supply
QDF27-1524	Green Right Terminal	To	QDF9574	“E” (Power Supply
QDF27-1524	Cross Grommet	To	Head Ground	Screw
QDF27-1524	Cross Grommet	To	Head Ground	Screw

QDF27-1214 CONNECTION				
Cable No.	**Connector No.**	**To**	**Cable No.**	**Connector No.**
QDF27-2214	Con. MTA 6 Pos.	To	QDF75-0110	J18 DC Board
QDF27-2214	Con. Metrimate	To	27-1547	Panel (27-1547)

QDF27-2228 CONNECTION				
Cable No.	**Connector No.**	**To**	**Cable No.**	**Connector No.**
QDF27-2228	J205	To	QDF27-2038	Transfo (L27-038)
QDF27-2228	J202 Grommet	To	---	Foot Litter Ground
QDF27-2228	J208AL (Black)	To	QDF9573	Single Outlet (27-2478)
QDF27-2228	J207 Terminal	To	QDF9025	Breaker (27-2478)
QDF27-2228	J206 Terminal	To	QDF9025	Breaker (27-2478)
QDF27-2228	J208AN (White)	To	QDF9573	Outlet (27-2478) White
QDF27-2228	J208AG (Green/Yellow)	To	QDF9573	Outlet (27-2478) Ground

Return To Table of Contents

1*	QDF27-1381	2
2*	QDF27-2213	1
3*	QDF27-1607	1
4*	QDF27-1646	1
5*	QDF5095	1
6*	QDF9518	51
7*	QDF27-1524	1
10*	QDF27-2214	1
11*	QDF27-2228	1
12*	QDF27-2025	1
13*	VW20A76	4
14*	VV33A0G28	3
15*	VE30A0G	6
16*	QDF27-2284	1
18	QDF2115	1

Return To Table of Contents

InTouch 2131 - OL270206 Rev-03
InTouch 2141 - OL270211 Rev-03

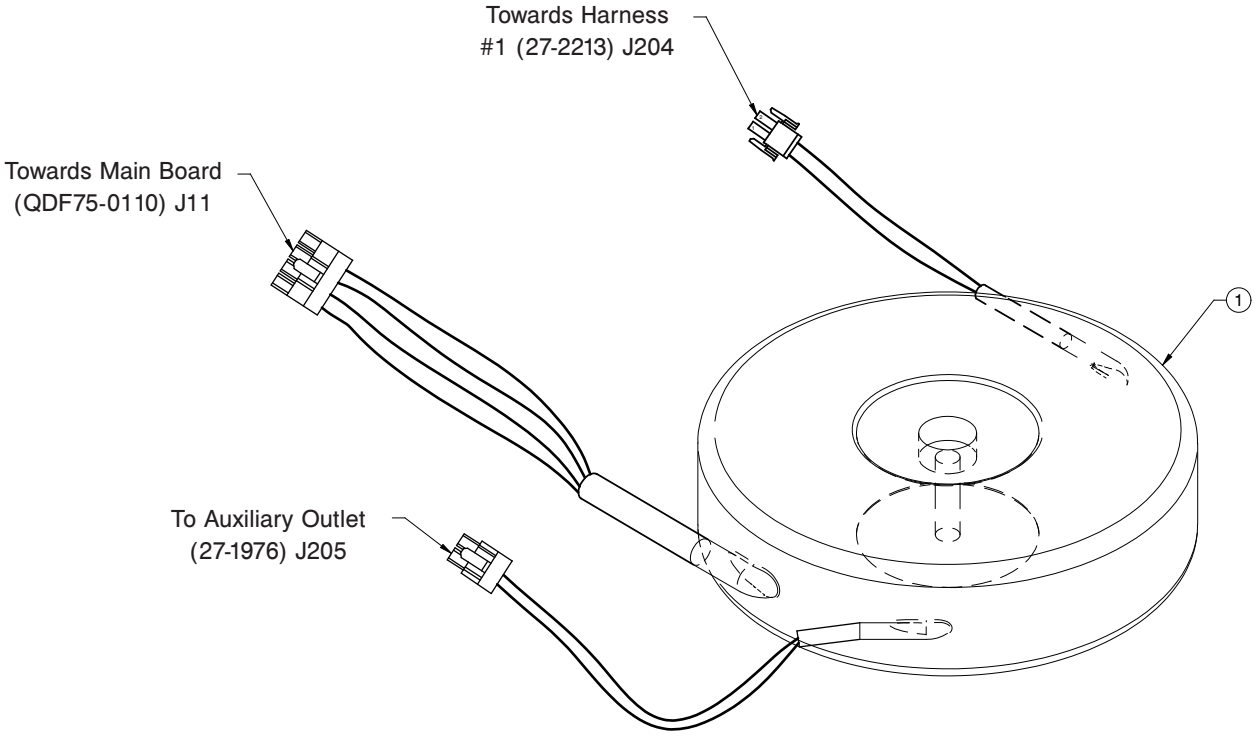

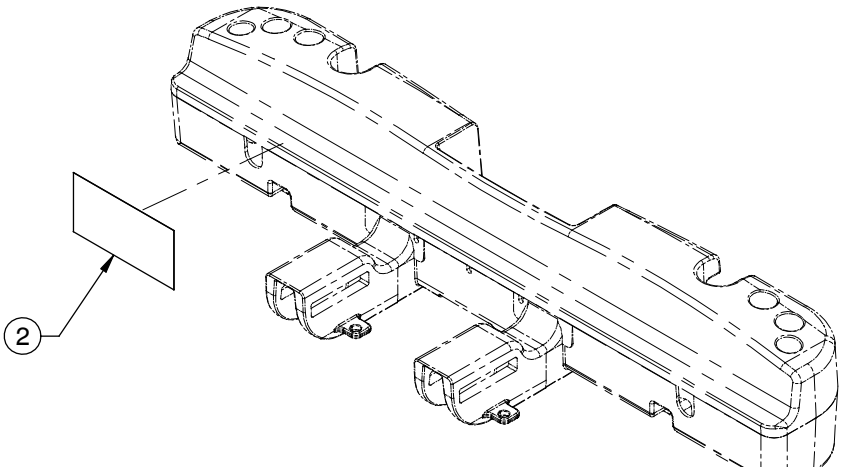

1	QDF27-2038	1
2	QE71-1183-tri	1 (InTouch 2131) or
	QE71-1188-tri	1 (InTouch 2141)

Return To Table of Contents

OL250053 - (120V)

Rev-00

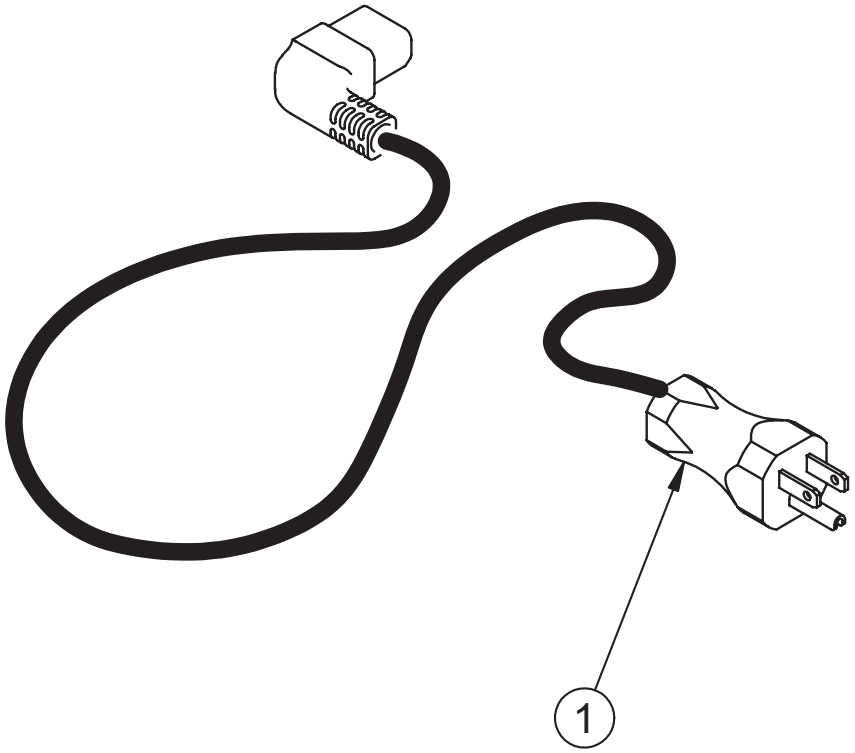

OL250055 - (120V)

Rev-00

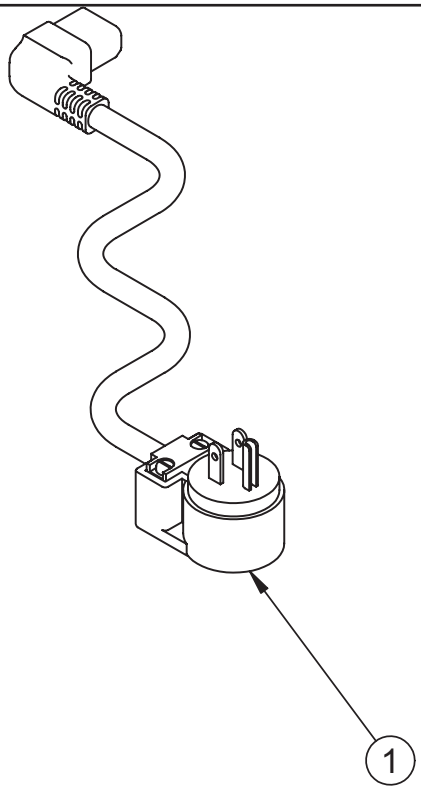

Return To Table of Contents

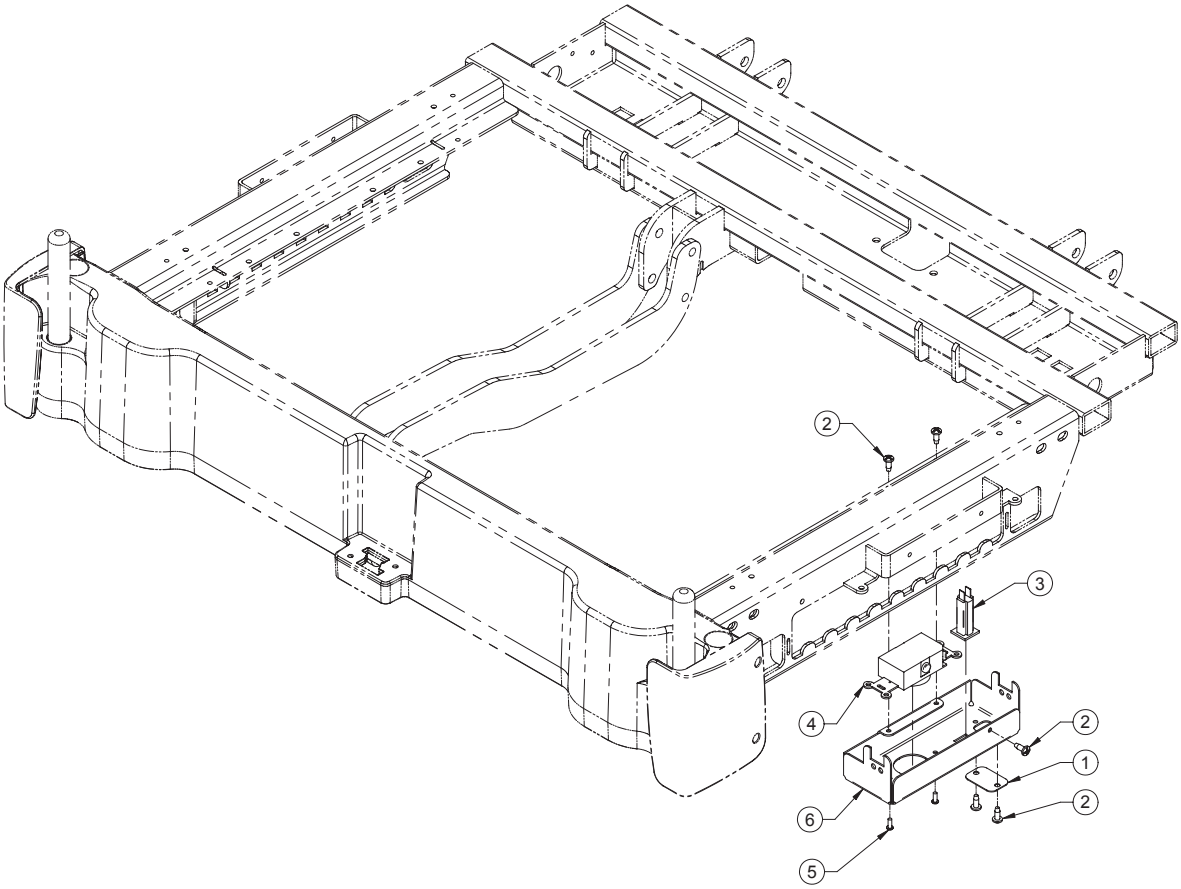

1	27-2250W	1
2	VV83A9G16	5
3	QDF9025	1
4	QDF9573	1
5	VV37A1C12	2
6	27-1967W	1

Return To Table of Contents

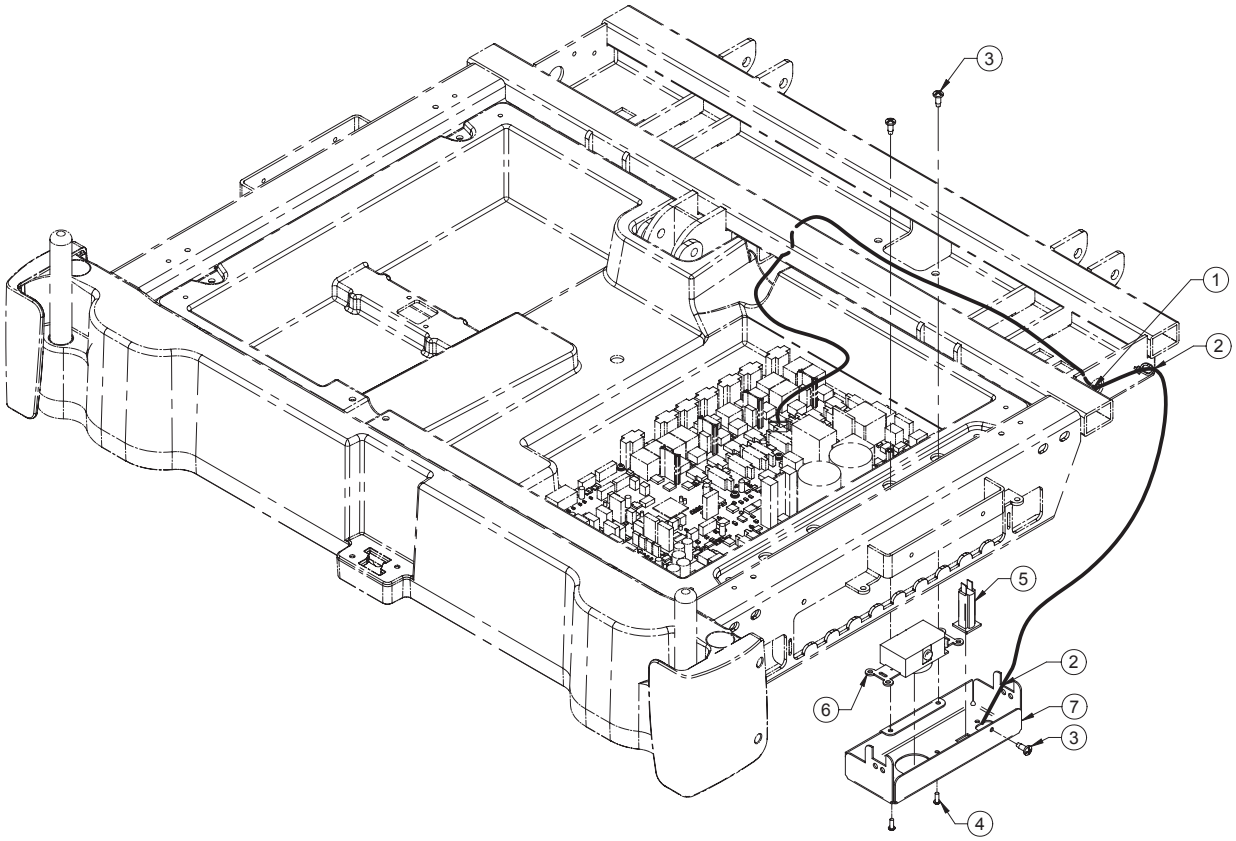

1	QDF27-2248	1
2	QDF9518	2
3	VV83A9G16	3
4	VV37A1C12	2
5	QDF9025	1
6	QDF9573	1
7	27-1967W	1

Return To Table of Contents

OL270013-eng = English
OL270013-tri = English/Français/Español
OL270013-bil = English/Français
OL270013-ger = Deutsch
OL270013-ita = Italiano
OL270013-dut = Nederlands
OL270013-gre = Ελληνική

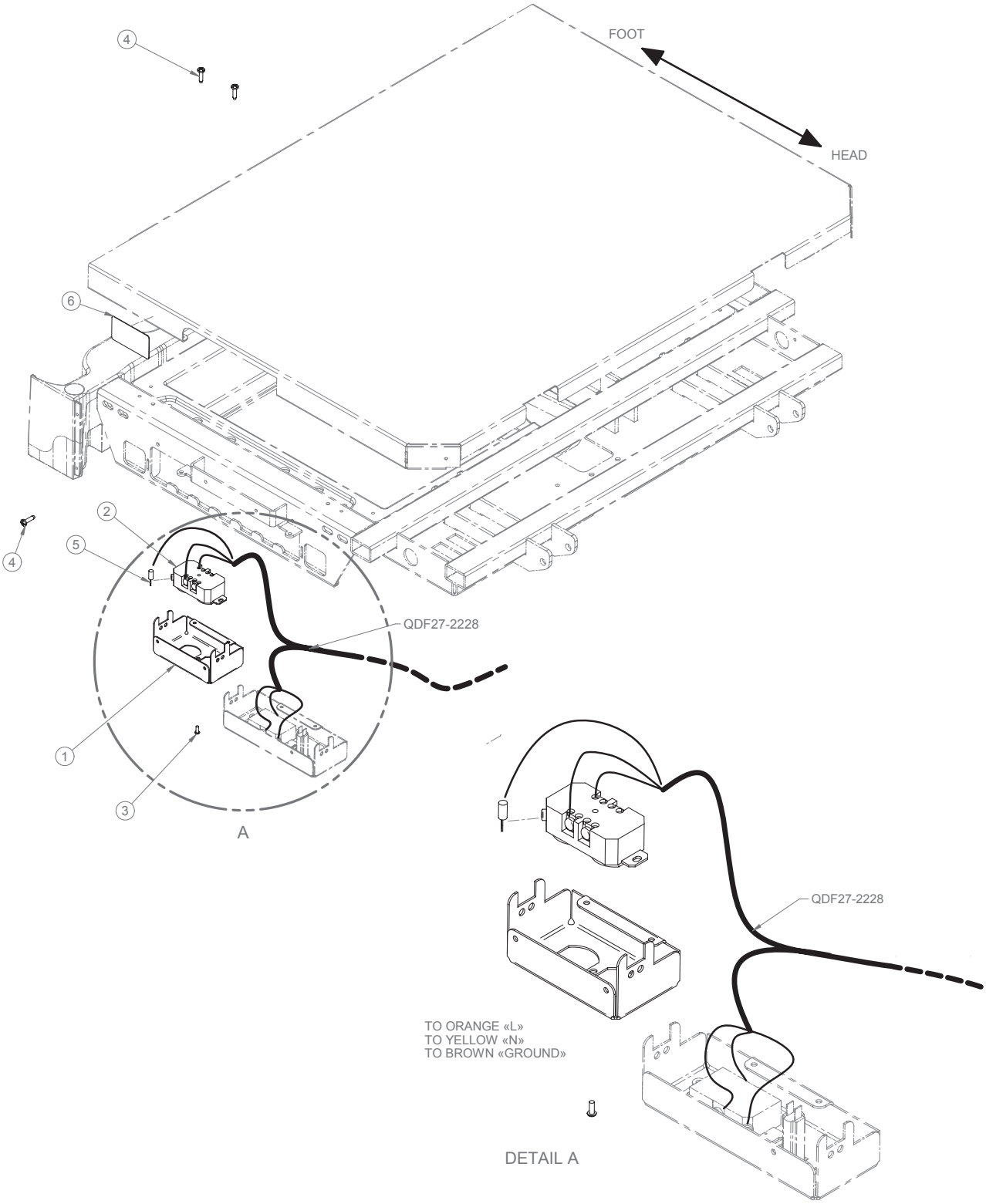

Return To Table of Contents

QDF27-2228 CONNECTION			
Cable No	**Connector No.**	**Cable No**	**Connector No.**
QDF27-2228	J108A-L (Black)	QDF9573	“L”
QDF27-2228	J108A-N (White)	QDF9573	“N”
QDF27-2228	J108A-G (Green)	QDF9573	“GROUND”
QDF27-2228	J108B-L (Orange)	QDF8024	“L”
QDF27-2228	J108B-N (Yellow)	QDF8024	“N”
QDF27-2228	J108B-G (Brown)	QDF8024	“GROUND”

1	27-1978W	1
2	QDF8024	1
3	VV37A1C12	1
4	VV83A9G24	3
5	QDF2124	1
6	QE71-0964-xxx	1 (English/Français/Español)

Return To Table of Contents

InTouch 2131 - OL270205 Rev-03
InTouch 2141 - OL270210 Rev-03

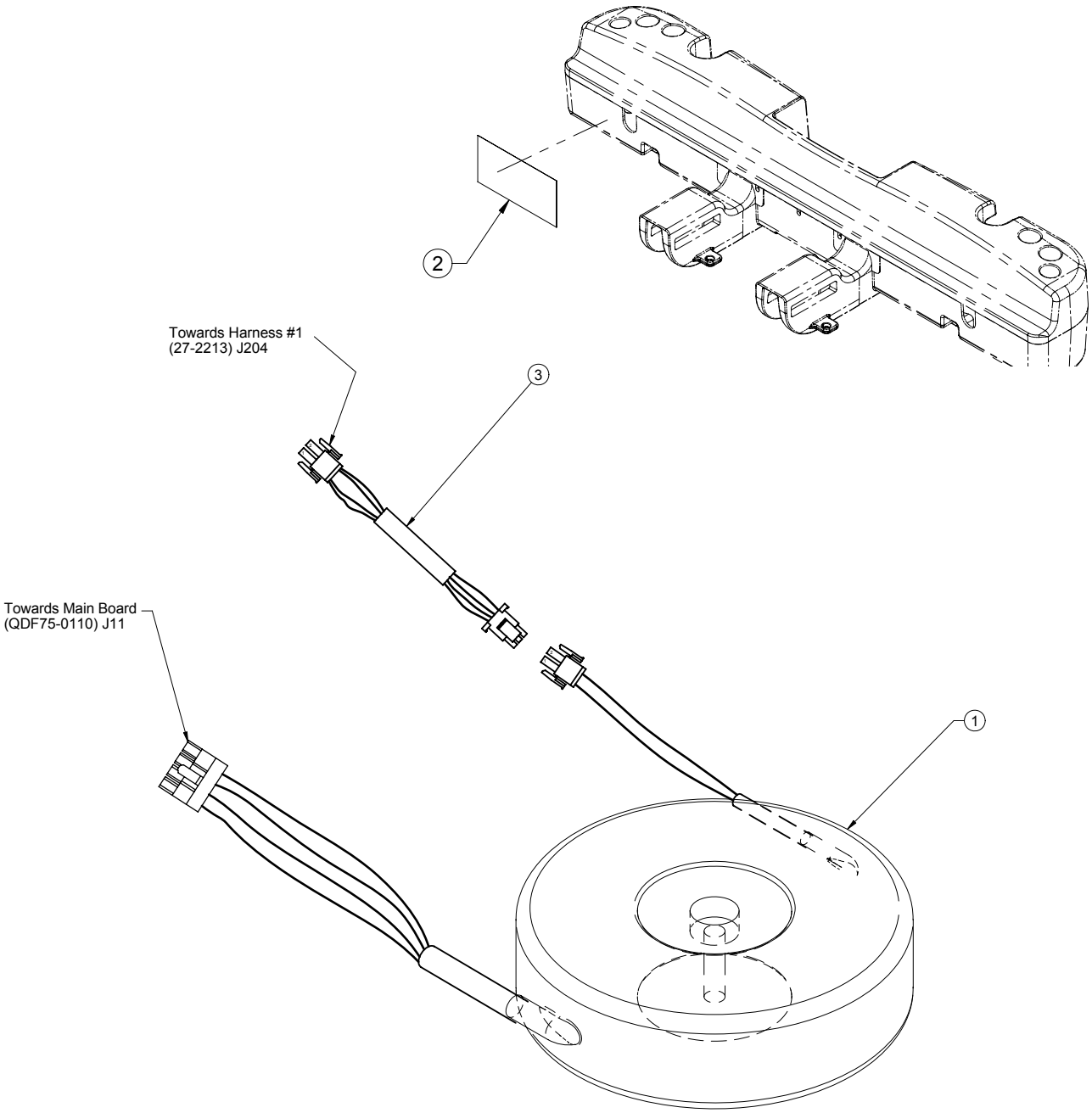

1	QDF27-2049	1
2	QE71-1187-tri (2141)	1 (English/Français/ Español)
	QE71-1182-tri (2131)	1 (English/Français/ Español)
3	QDF27-1841	1

Return To Table of Contents

InTouch 2131 - OL270207 Rev-03
InTouch 2141 - OL270212 Rev-03

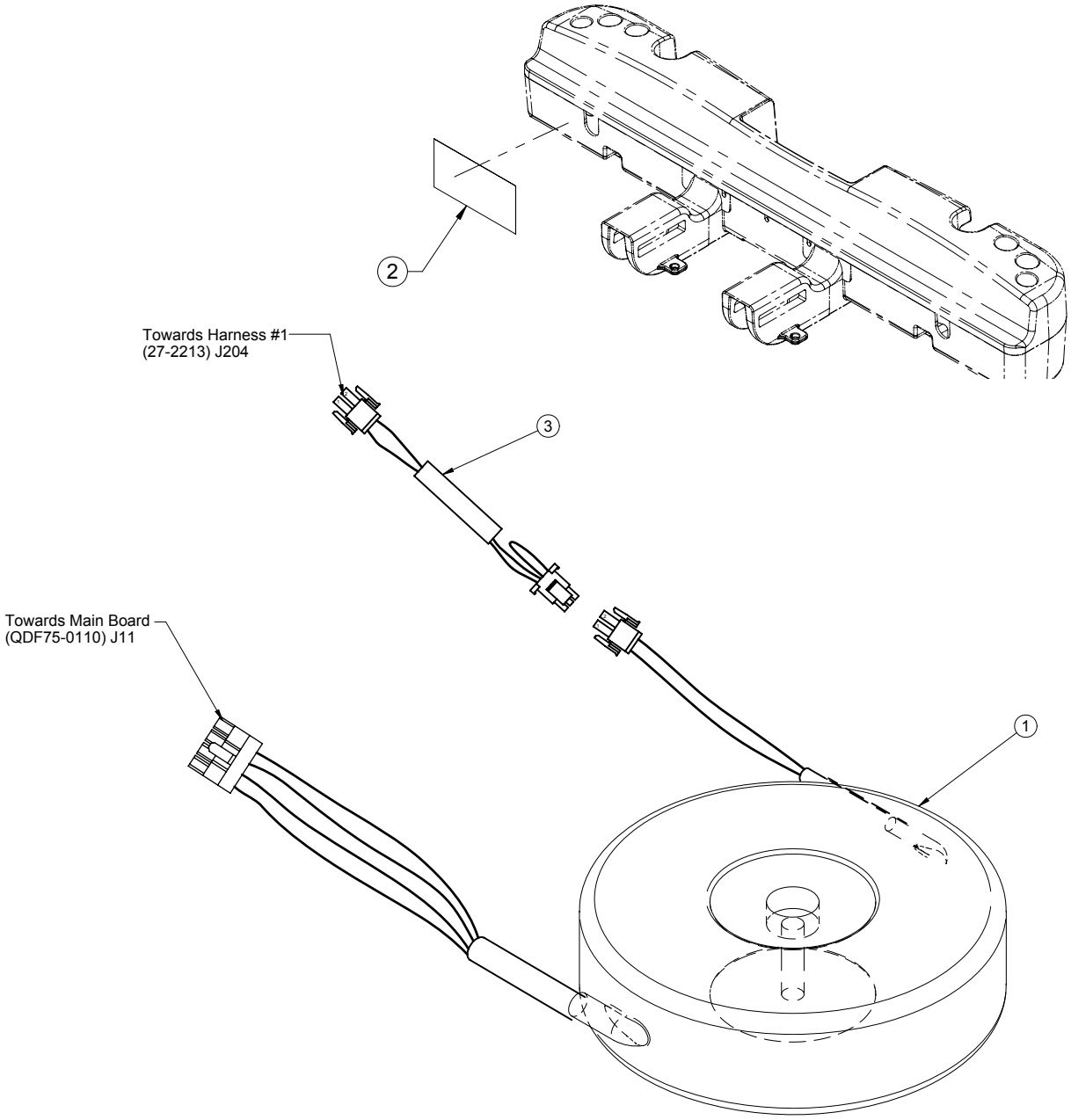

1	QDF27-2049	1
2	QE71-1189-tri (2141)	1 (English/Français/Español)
	QE71-1184-tri (2131)	1 (English/Français/ Español)
3	QDF27-1842	1

Return To Table of Contents

InTouch 2131 - OL270208 Rev-03
InTouch 2141 - OL270213 Rev-03

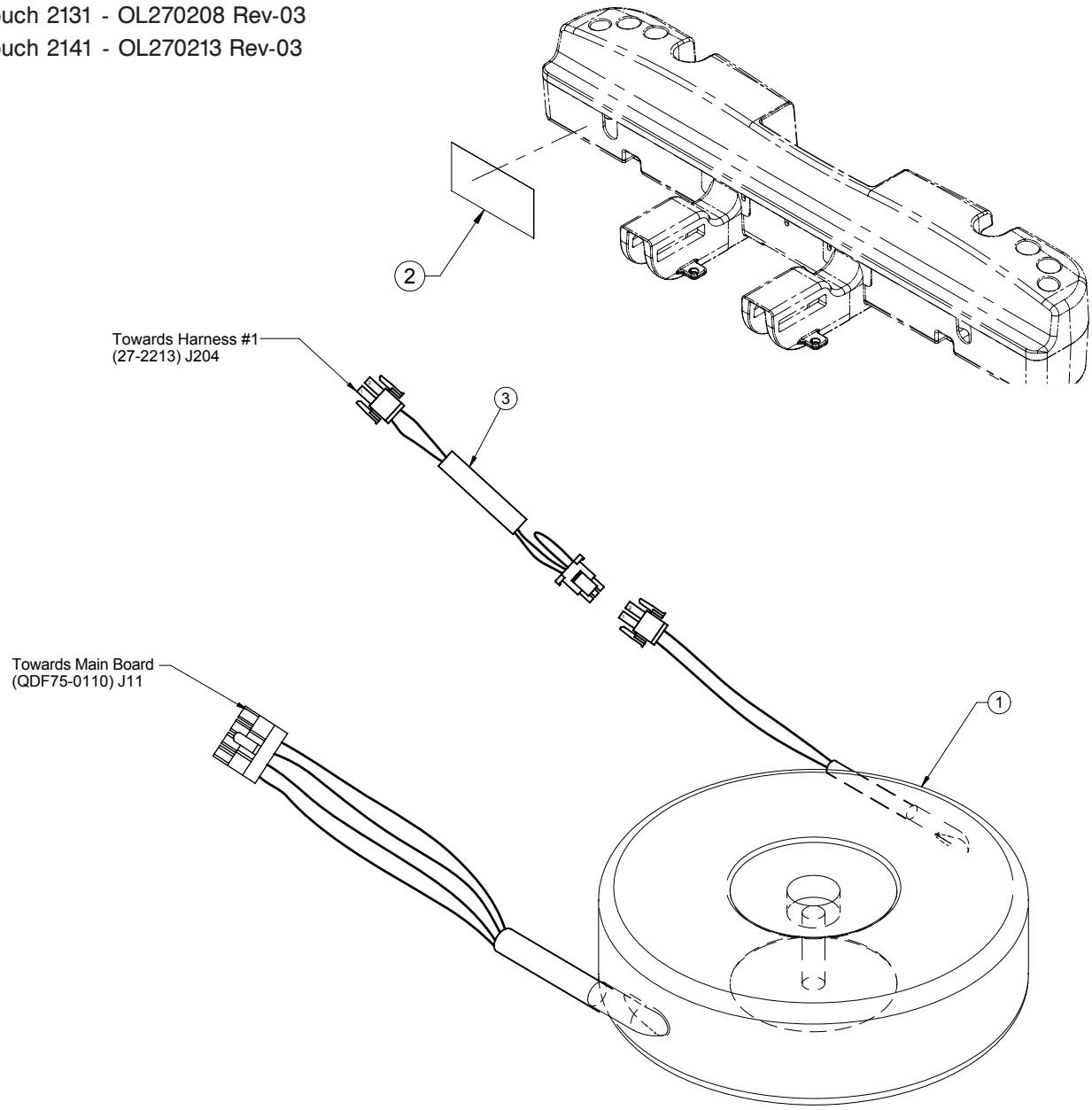

1	QDF27-2049	1
2	QE71-1190-tri (2141)	1 (English/Français/ Español) or
	QE71-1190-ita (2141)	1 (Italiano) or
	QE71-1190-dut (2141)	1 (Nederlands) or
	QE71-1190-gre (2141)	1 (Ελληνική) or
	QE71-1185-tri (2131)	1 (English/Français/ Español) or
	QE71-1185-ita (2131)	1 (Italiano) or
	QE71-1185-dut (2131)	1 (Nederlands) or
	QE71-1185-gre (2131)	1 (Ελληνική)
3	QDF27-1843	1

Return To Table of Contents

InTouch 2131 - OL270209 Rev-03
InTouch 2141 - OL270214 Rev-03

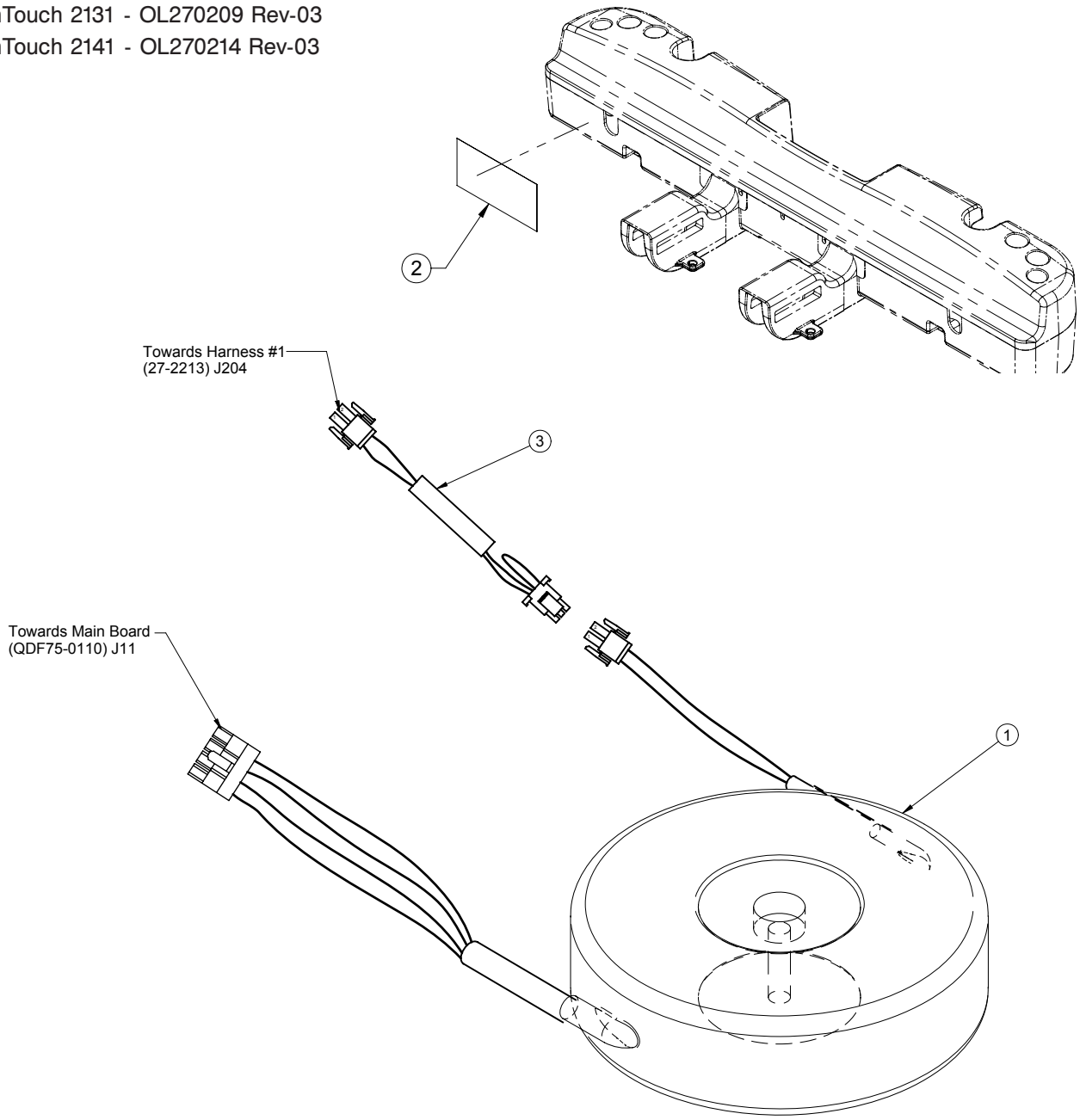

1	QDF27-2049	1
2	QE71-1191-eng (2141)	1 (English) or
	QE71-1191-tri (2141)	1 (English/Français/Español) or
	QE71-1191-ger (2141)	1 (Deutsch) or
	QE71-1186-eng (2131)	1 (English) or
	QE71-1186-tri (2131)	1 (English/Français/Español) or
	QE71-1186-ger (2131)	1 (Deutsch)
3	QDF27-1840	1

Return To Table of Contents

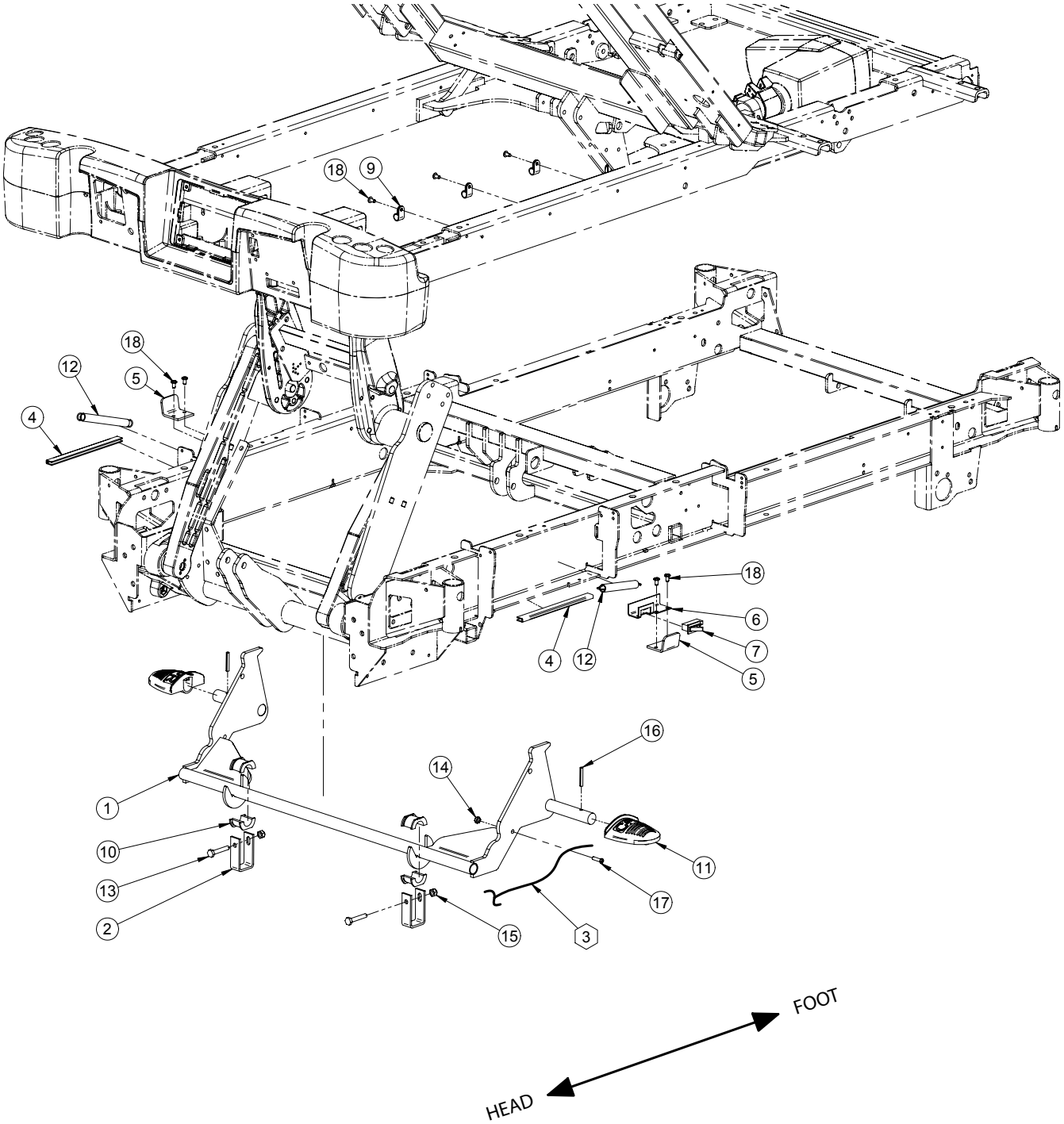

Return To Table of Contents

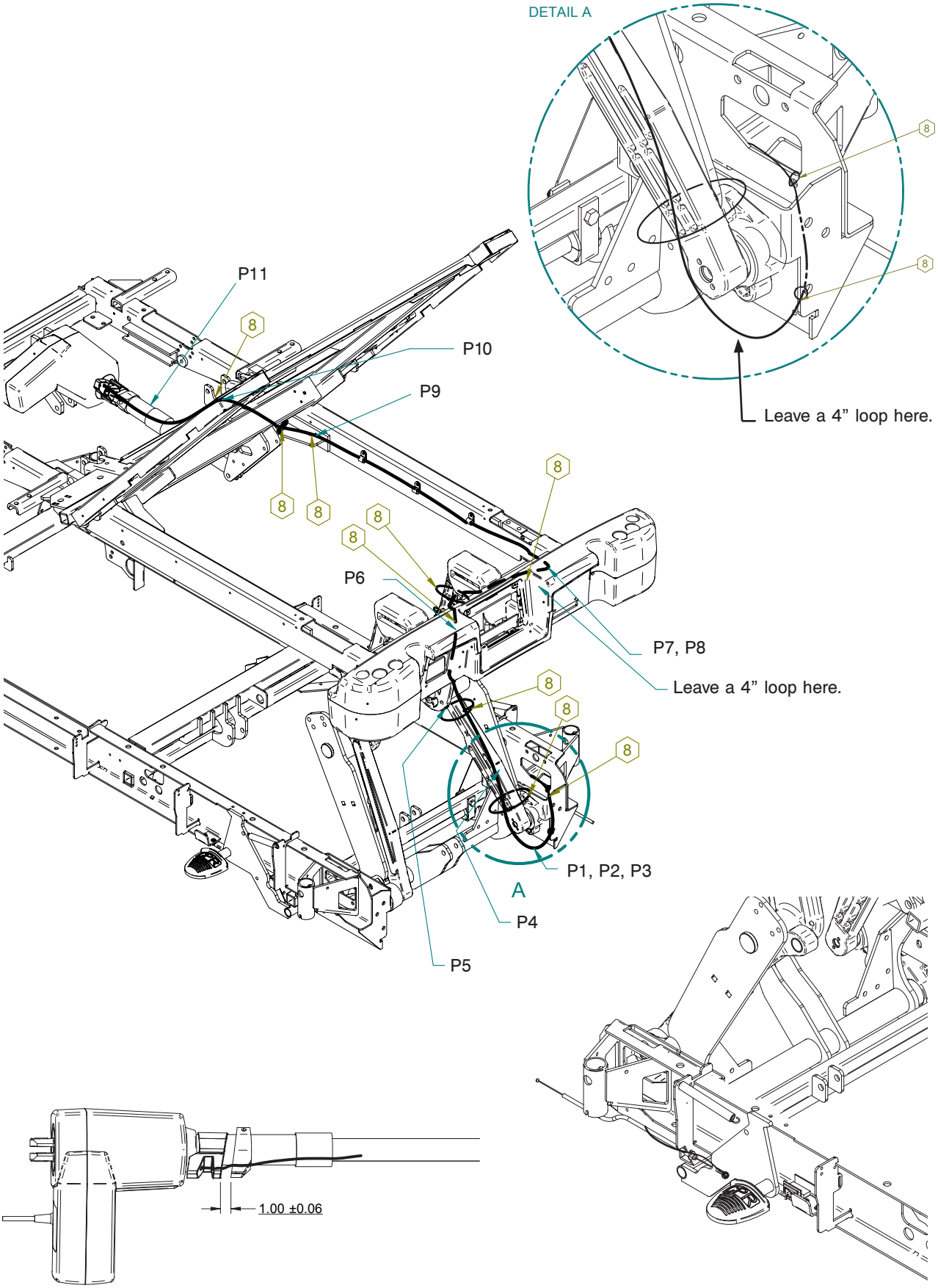

Return To Table of Contents

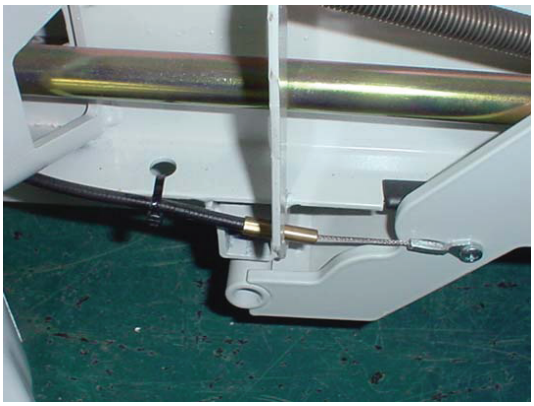

P1

P2

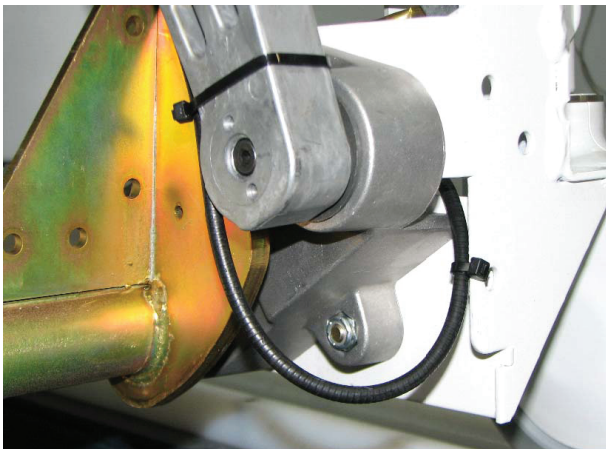

P3

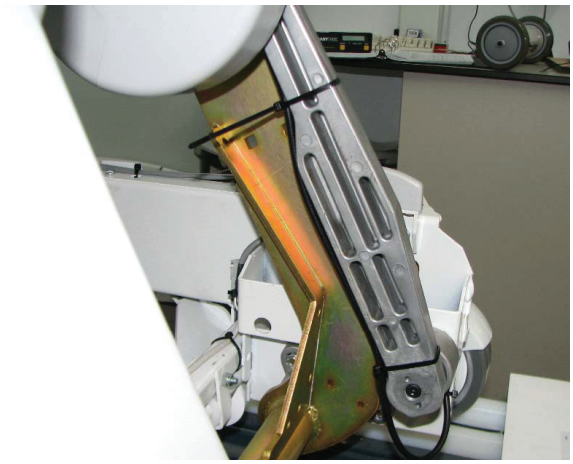

P4

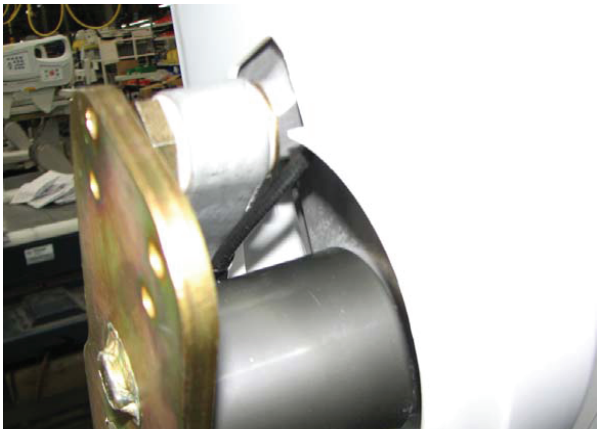

P5

P6

Return To Table of Contents

P7

P8

P9

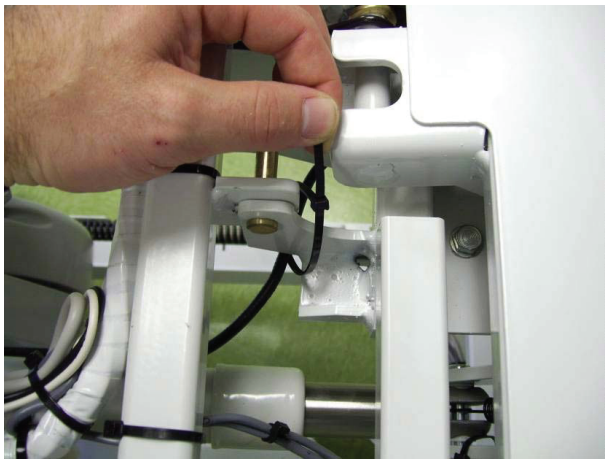

P10

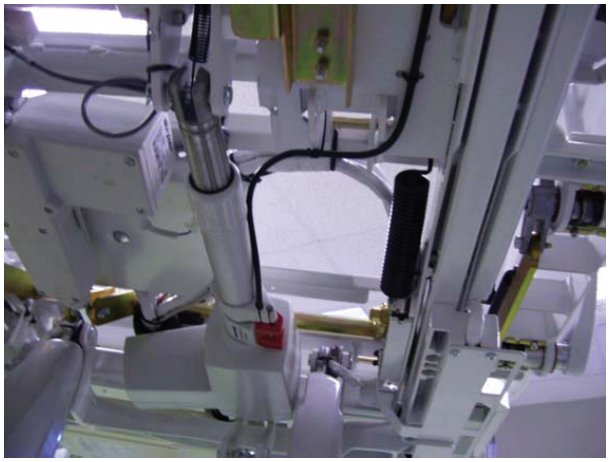

P11

Return To Table of Contents

CABLE CONNECTION			
Cable No.	**Connector No.**	**Cable No.**	**Connector No.**
QDF2083	CPR Switch	QDF27-1204	J127

1	27-1897W	1
2	27-1917Z	2
3	QDF27-1966	1
4	27-2036	2
5	27-2062Z	2
6	27-2086Z	1
7	QDF2083	1
8	QDF9518	12
9	QDF9520	3
10	QP19-0270	4
11	QP27-2065-15	2
12	QRE23-0438	2
13	VB15A1N44	2
14	VE30A0G	1
15	VE30A1N	2
16	VG10B0636	2
17	VV33A0G24	1
18	VV83A9G12	7

Return To Table of Contents

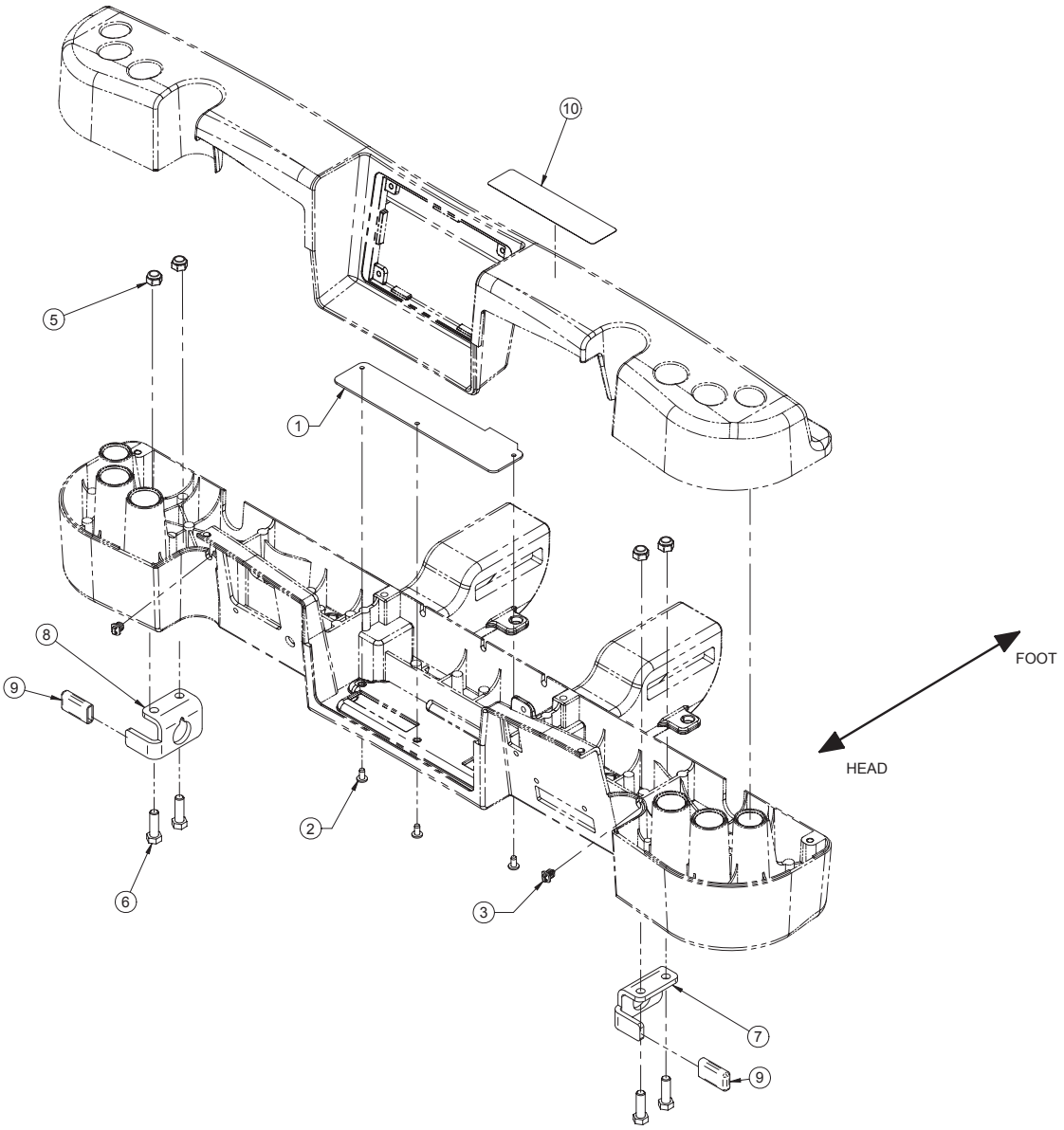

1	27-1651W	1
2	VV83A9G12	3
3	QDF5096	2
5	VE30A1O	4
6	VB15A1032	4
7	27-2272Z	1
8	27-2273Z	1
9	QDF2131	2
10	QE71-1176-tri	1 (English/Français/ Español) or
	QE71-1176-ger	1 (Deutsch) or
	QE71-1176-ita	1 (Italiano) or
	QE71-1176-dut	1 (Nederlands) or
	QE71-1176-gre	1 (Ελληνική)

Return To Table of Contents

27-2547-tri = English/Français/Español
27-2547-bil = English/Français
27-2547-ger = Deutsch
27-2547-ita = Italiano
27-2547-dut = Nederlands
27-2547-gre = Ελληνική

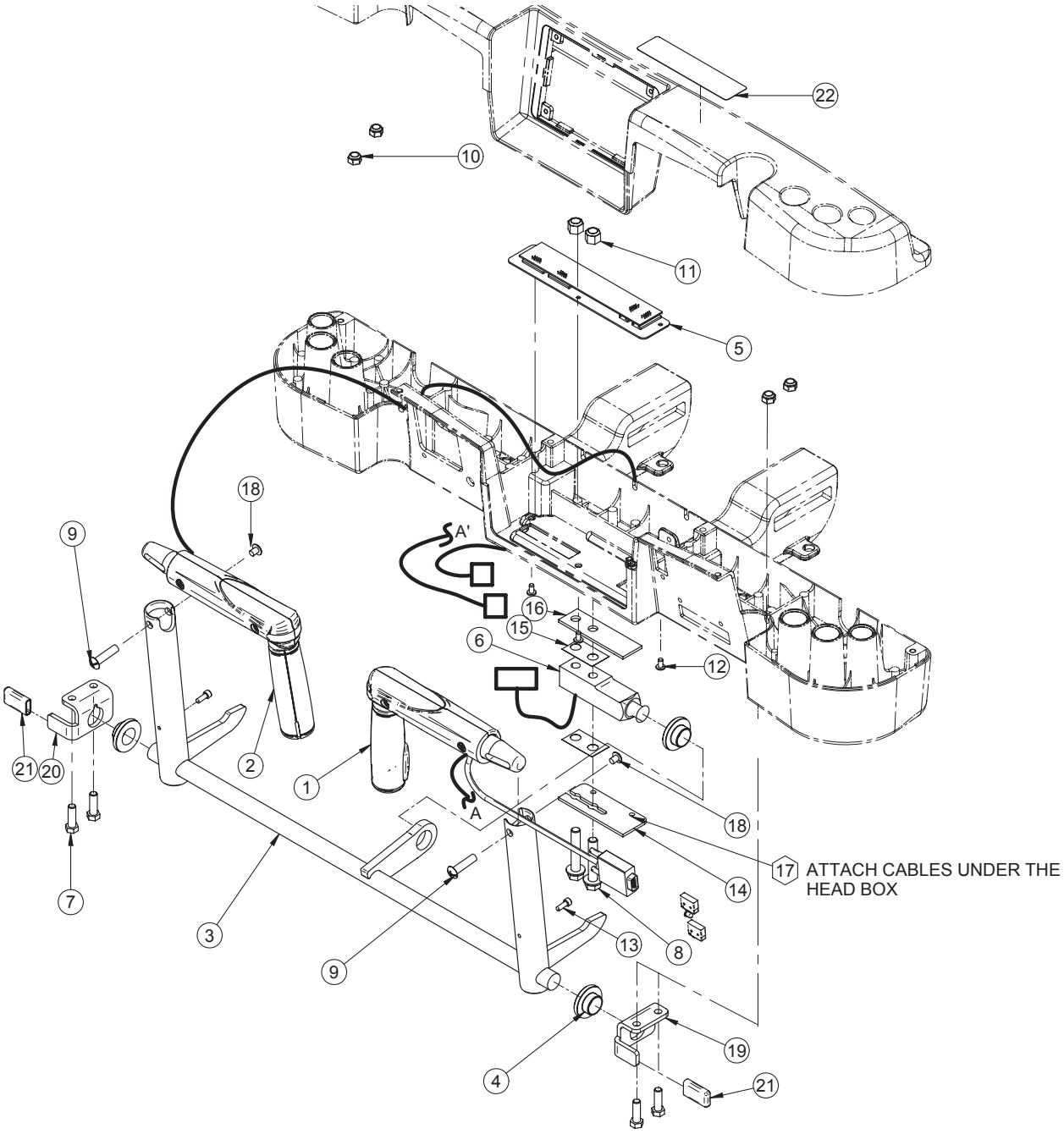

Return To Table of Contents

27-2548 BOARD CONNECTION

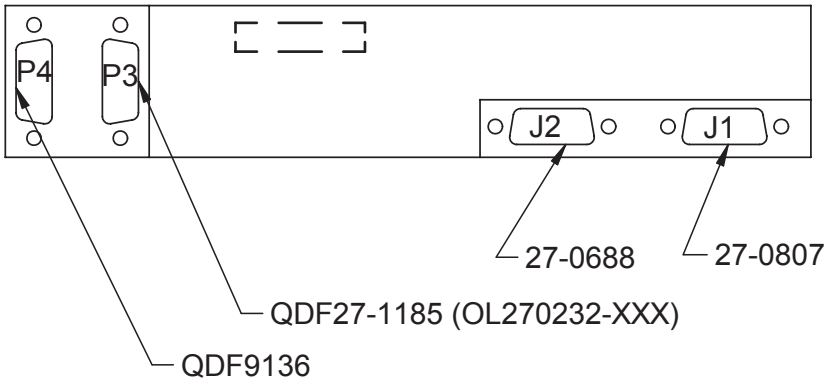

1	27-0688	1
2	27-0807	1
3	27-0880C	1
4	27-1181	3
5	27-2548	1
6	QDF9136	1
7	VB15A1O32	4
8	VB95A1P48	2
9	VE42A936	2
10	VE30A1O	4
11	VE30A1P	2
12	VV83A9G12	3
13	VV10A0G16-S	2
14	27-1857Z	1
15	QDF27-1780	2
16	27-1775Z	1
17	QDF9518	1
18	VV33A1N10-S	2
19	27-2272Z	1
20	27-2273Z	1
21	QDF2131	2
22	QE71-1176-tri	1 (English/Français/ Español) or
	QE71-1176-ger	1 (Deutsch) or
	QE71-1176-ita	1 (Italiano) or
	QE71-1176-dut	1 (Nederlands) or
	QE71-1176-gre	1 (Ελληνική)

Return To Table of Contents

OL270077-eng = English
OL270077-bil = English/Français
OL270077-ger = Deutsch
OL270077-ita = Italiano
OL270077-dut = Nederlands
OL270077-gre = Ελληνική

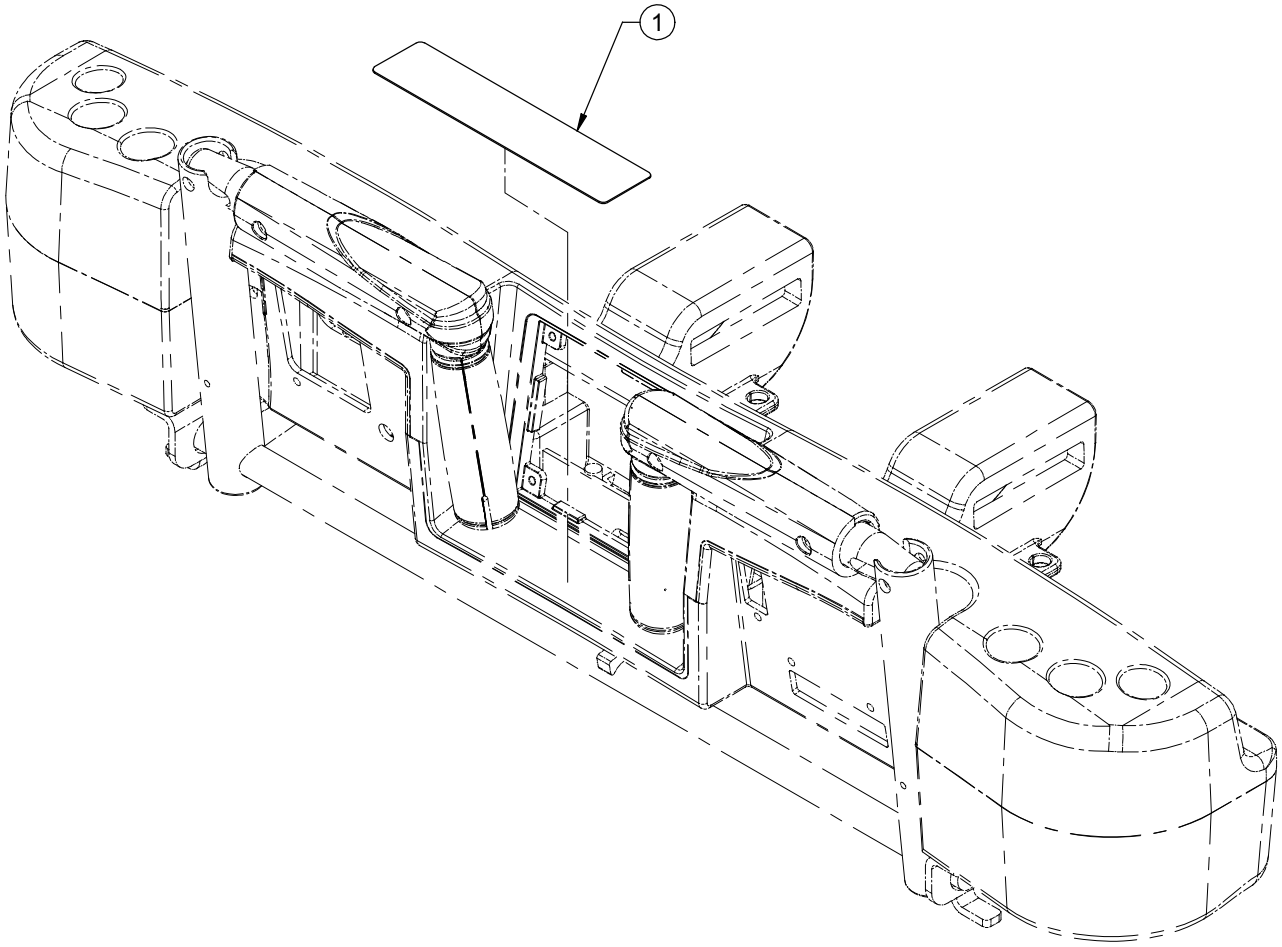

1	QE71-0946-eng	1 (English) or
	QE71-0946-bil	1 (English/Français) or
	QE71-0946-ger	1 (Deutsch) or
	QE71-0946-ita	1 (Italiano) or
	QE71-0946-dut	1 (Nederlands) or
	QE71-0946-gre	1 (Ελληνική)

Return To Table of Contents

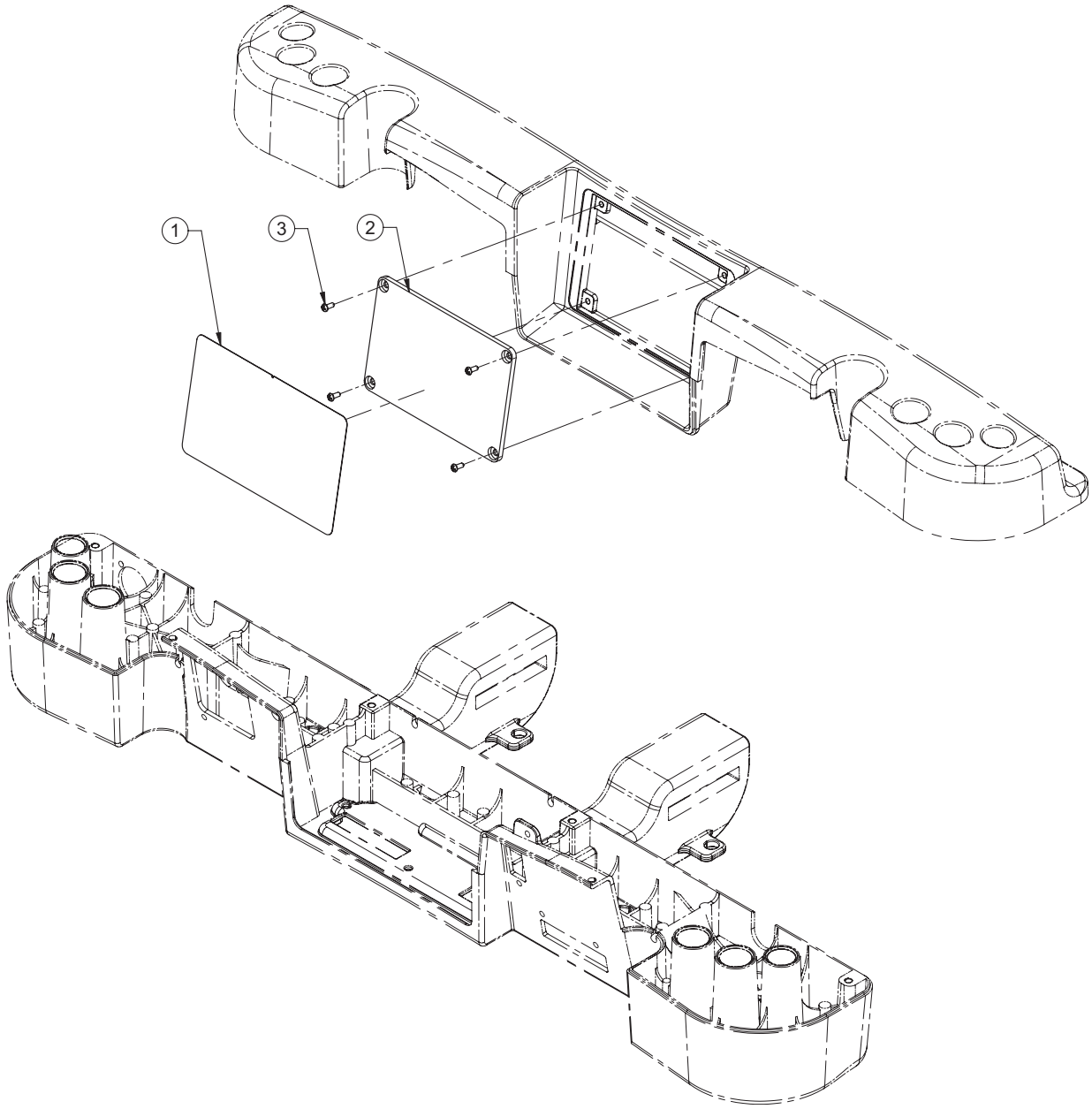

1	QDF27-1649	1
2	QP27-1650	1
3	VV23A9C12HL	4

Return To Table of Contents

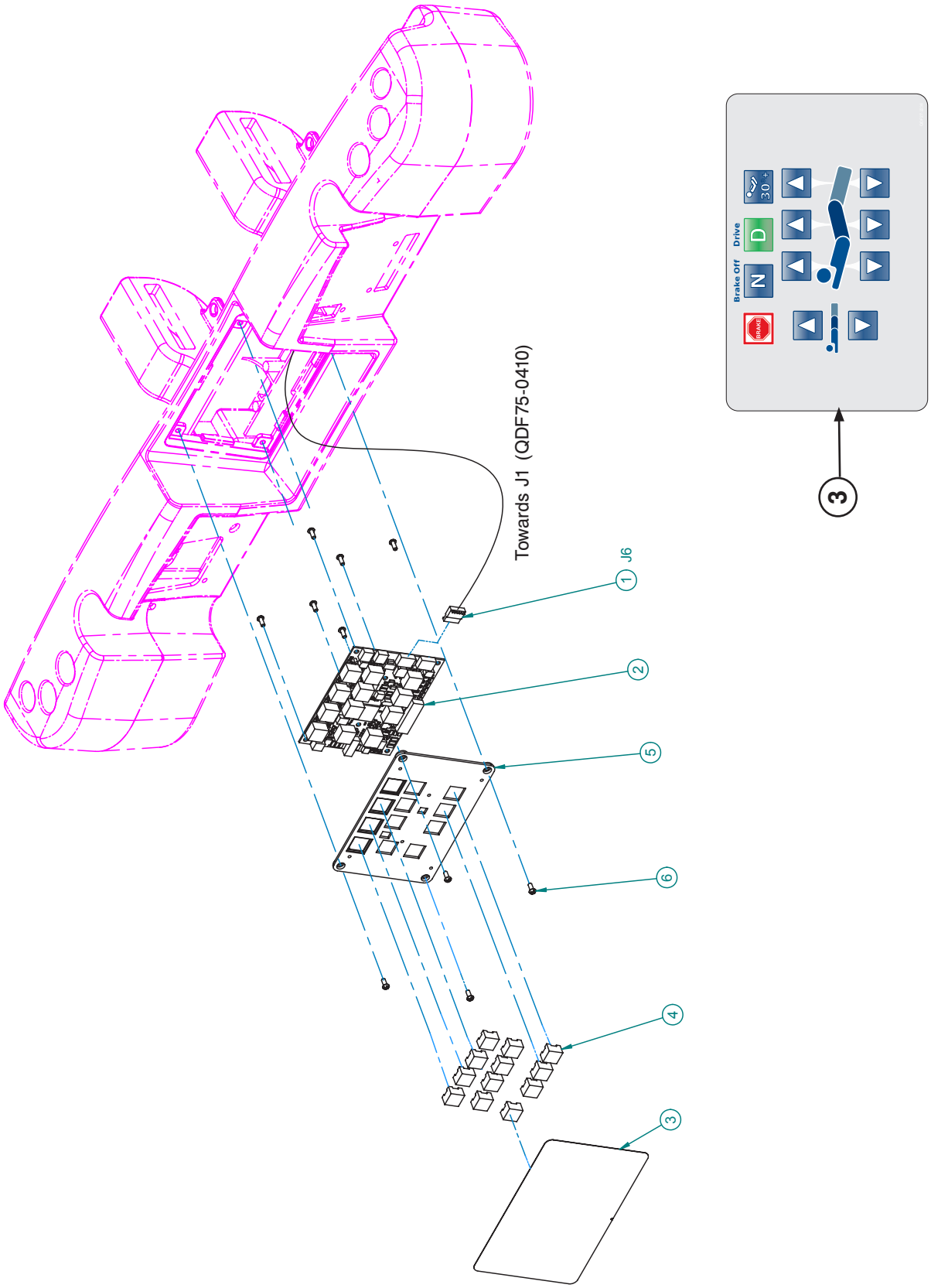

Return To Table of Contents

QDF21-2895 CONNECTION			
Cable No	**Connector No.**	**Cable No**	**Connector No.**
QDF21-2895	MTA6	QDF27-1099	J6 (QDF27-1098)
QDF21-2895	MTA6	QDF75-0410	J1 (L27-055)

DIP SWITCH CONFIGURATION ON QDF27-1099			
SW13	ON	OFF	ON
SW14	OFF	OFF	-

1	QDF21-2895	1
2	QDF27-1099	1
3	QDF27-2236-eng	1 (English) or
	QDF27-2236-bil	1(English/Français)
	QDF27-2236-ger	1 (Deutsch) or
	QDF27-2236-ita	1 (Italiano) or
	QDF27-2236-dut	1 (Nederlands) or
	QDF27-2236-gre	1 (Ελληνική)
4	QDF9183	12
5	QP27-1111	1
6	VV23A9C12HL	10

Return To Table of Contents

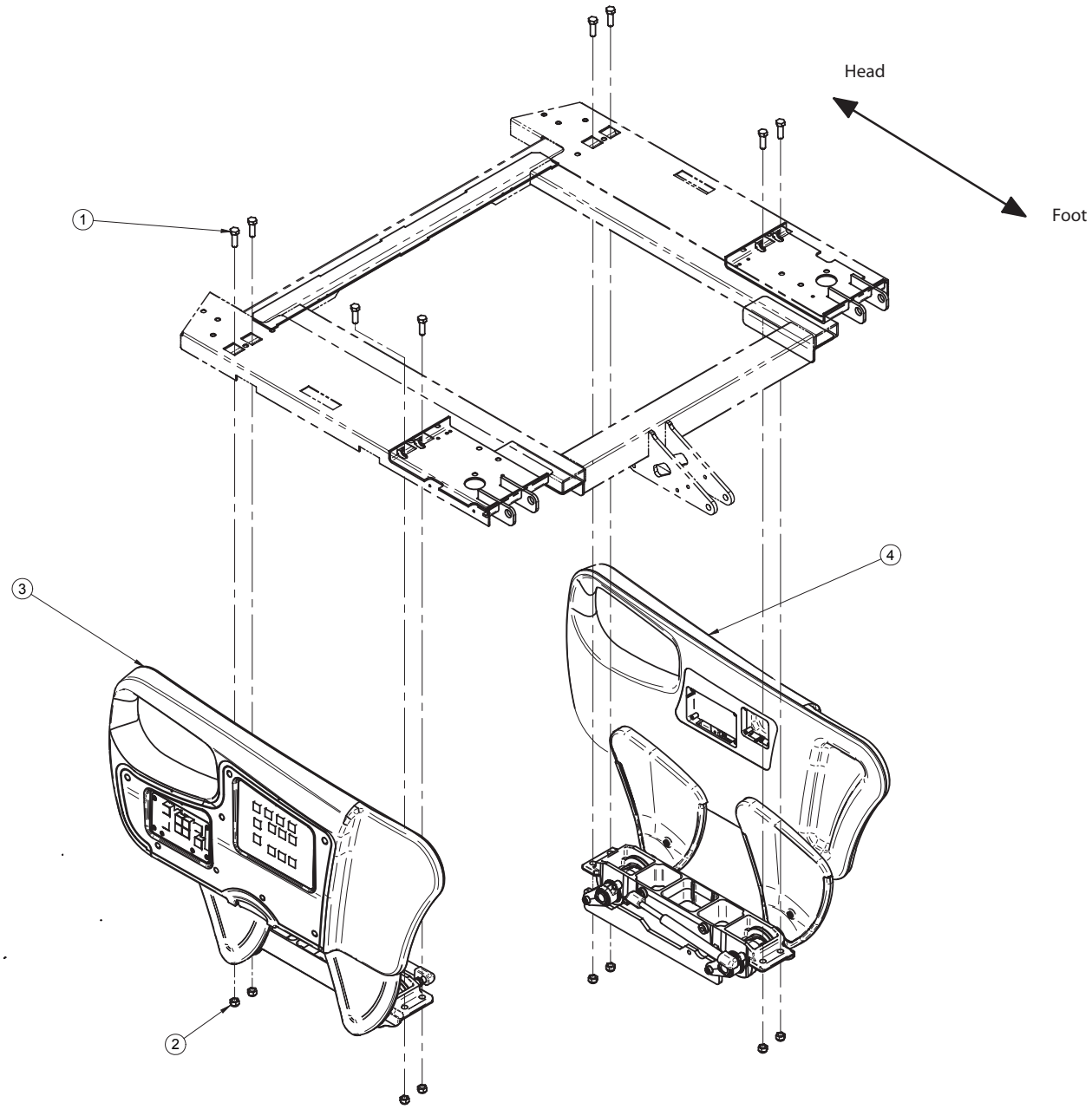

1	VB18A1O32	8
2	VE30A1O	8
3	27-2287W	1
4	27-2288W	1

Return To Table of Contents

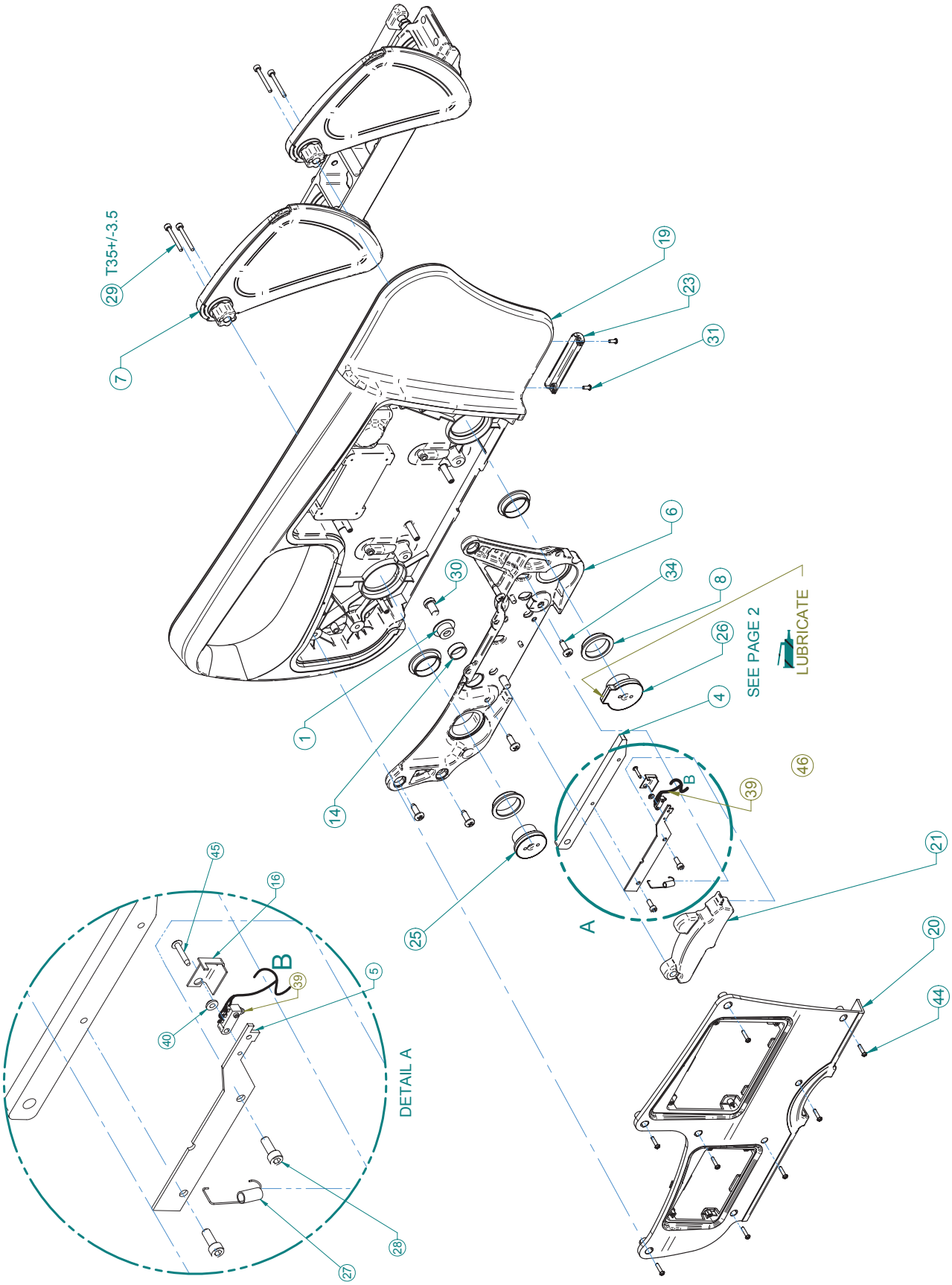

Return To Table of Contents

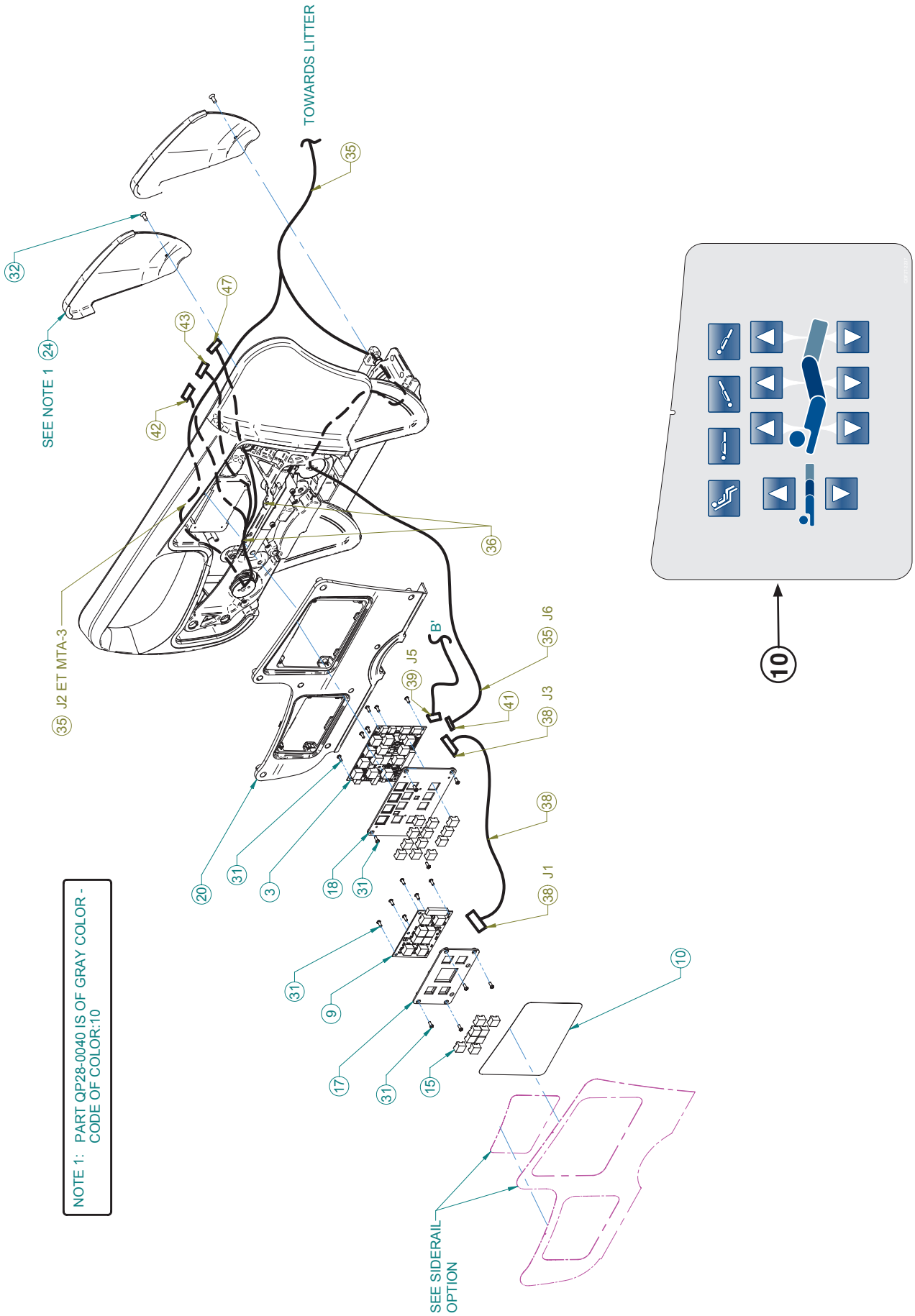

Return To Table of Contents

POSITION ON CONNECTOR						
Cable 36	Position on Connector 47	Position on Connector 41	Position on Connector 43	Position on Connector 42	Signal	Color
1	-	1	-	-	“CAN H”	Black / Red
2	-	2	-	-	“CAN L”	Red
3	-	3	-	-	+12V	Black / White
4	-	4	-	-	“GND”	White
5	-	5	-	-	“SAFE”	Black / Green
6	-	6	-	-	+24V	Green
-	-	-	-	-	Audioshield	-
1	-	-	1	-	“SPK HIGH”	Black
2	-	-	2	-	“SPK COM”	White
1	-	-	-	1	N.O.	Red
2	-	-	-	2	COM	Green
3	-	-	-	3	N.C.	Brown
1	1	-	-	-	Speaker	Blue
2	2	-	-	-	Speaker	Orange

DIPSWITCH SETUP ON QDF27-1099			
SW13	ON	ON	ON
SW14	ON	ON	-

CABLES CONNECTION				
Cable No.	Connector No.	To	Cable No.	Connector No.
QDF27-1681	MTA – 3 Positions	To	QDF27-1099	J5
QDF27-1156	MTA – 6 Positions	To	QDF27-1099	J3
QDF27-1156	MTA – 6 Positions	To	QDF27-1097	J1
QDF27-1784	MTA – 3 Positions	To	QDF27-2212	MTA-2 Postions
QDF27-2212	Mate N Lock 12 Pos.	To	QDF27-2213	J105 (L27-056)
QDF27-2212	MTA – 6 Positions	To	QDF27-1099	J6
QDF27-2212	MTA – 3 Positions	To	See OL270256, OL270253, OL270164, OL270254, OL270255, OL270175	
QDF27-2212	MTA – 2 Positions	To		
QDF27-2212	Connector 2 Pins	To		

Return To Table of Contents

1	QPA28-0493	1
3	QDF27-1099	1
4	QDF27-2574Z	1
5	27-2575Z	1
6	QPA27-2295	1
7	27-2061W	1
8	QDF2049	4
9	QDF27-1097	1
10	QDF27-2237	1
14	QDF28-0491	1
15	QDF9183	20
16	27-2292Z	1
17	QP27-1109-10	1
18	QP27-1111	1
19	QP27-2225-05	1
20	QP27-1265-05	1
21	QP27-1273-08	1
23	QP27-1496-05	1
24	QP28-0040-10	2
25	QPA28-0015	1
26	QPA28-0016	1
27	QRE27-1736	1
28	VV10A0G16-S	2
29	VV10B0G40-S	4
30	VV10A1P20-S	1
31	VV23A9C12HL	22
32	VV31A0G16	2
34	VVB3A9N24PF	5
35*	QDF27-2212	1
36*	QDF9518	2
38*	QDF27-1156	1
39*	QDF27-1521	1
40	27-1839	1
41*	QDF2088	1
42*	QDF9028	1
43*	QDF2087	1
44	VV23A9C20HL	8
45	VV87A9A20	1
46*	M0019	1
47*	QDF2127	1

Return To Table of Contents

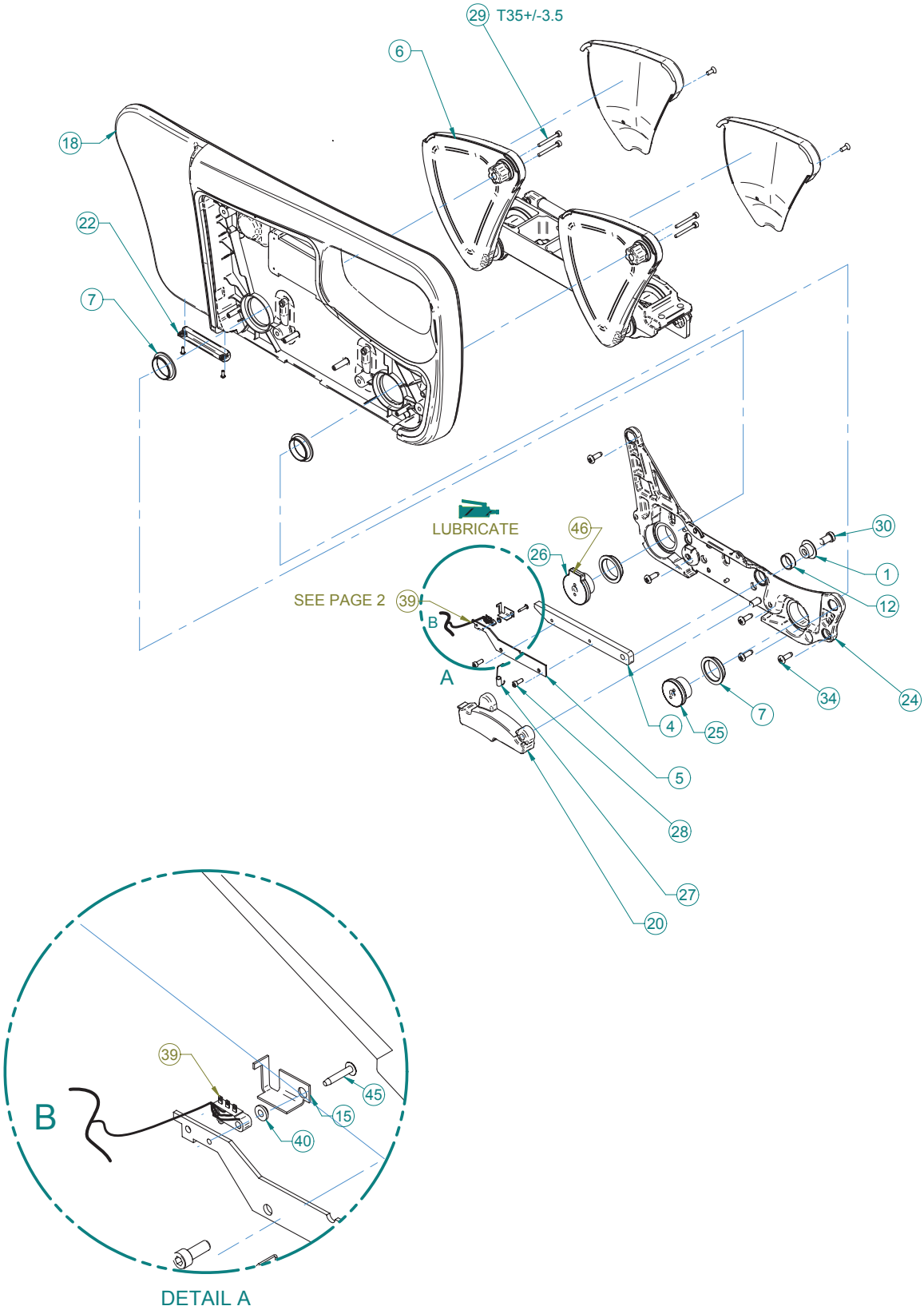

Return To Table of Contents

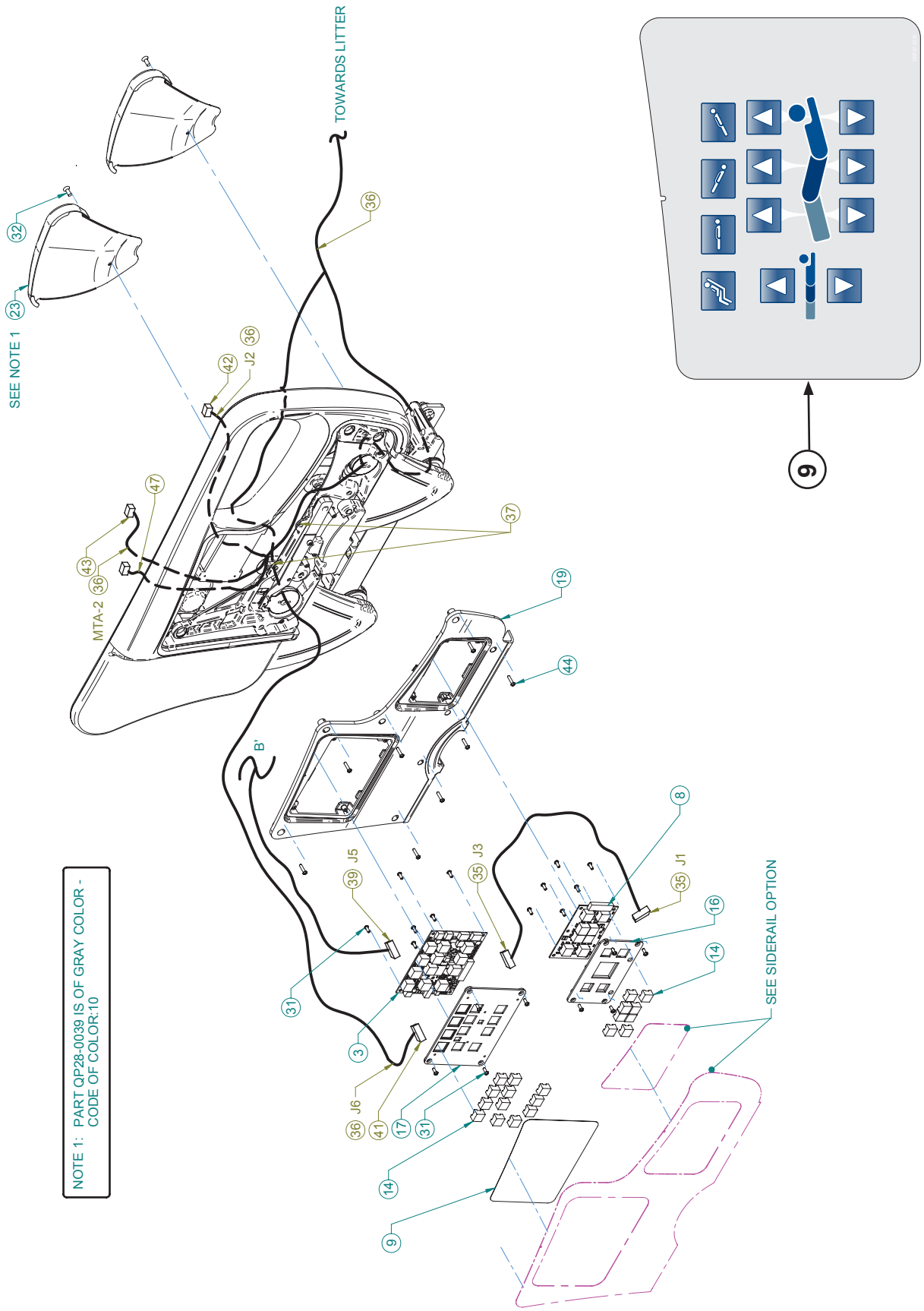

Return To Table of Contents

POSITION ON CONNECTOR						
Cable 36	Position on Connector 47	Position on Connector 41	Position on Connector 43	Position on Connector 42	Signal	Color
1	-	1	-	-	“CAN H”	Black / Red
2	-	2	-	-	“CAN L”	Red
3	-	3	-	-	+12V	Black / White
4	-	4	-	-	“GND”	White
5	-	5	-	-	“SAFE”	Black / Green
6	-	6	-	-	+24V	Green
-	-	-	-	-	Audioshield	-
1	-	-	1	-	“SPK HIGH”	Black
2	-	-	2	-	“SPK COM”	White
1	-	-	-	1	N.O.	Red
2	-	-	-	2	COM	Green
3	-	-	-	3	N.C.	Brown
1	1	-	-	-	Speaker	Blue
2	2	-	-	-	Speaker	Orange

DIPSWITCH SETUP ON QDF27-1099			
SW13	OFF	ON	ON
SW14	OFF	OFF	-

CABLES CONNECTION				
Cable No.	Connector No.	To	Cable No.	Connector No.
QDF27-1681	MTA – 3 Positions	To	QDF27-1099	J5
QDF27-1156	MTA – 6 Positions	To	QDF27-1099	J3
QDF27-1156	MTA – 6 Positions	To	QDF27-1097	J1
QDF27-1784	MTA – 3 Positions	To	QDF27-2212	MTA-2 Postions
QDF27-2212	Mate N Lock 12 Pos.	To	QDF27-2213	J105 (L27-038)
QDF27-2212	MTA – 6 Positions	To	QDF27-1099	J6
QDF27-2212	MTA – 3 Positions	To	See OL270256, OL270253, OL270164, OL270254, OL270255 OL270175	
QDF27-2212	MTA – 2 Positions	To		
QDF27-2212	Connector 2 Pins	To		

Return To Table of Contents

1	QPA28-0493	1
3	QDF27-1099	1
4	QDB27-1141	1
5	27-2291Z	1
6	27-2060W	1
7	QDF2049	4
8	QDF27-1097	1
9	QDF27-2238	1
12	QDF28-0491	1
14	QDF9183	20
15	27-2293Z	1
16	QP27-1109-10	1
17	QP27-1111	1
18	QP27-2226-05	1
19	QP27-1266 -05	1
20	QP27-1274-08	1
22	QP27-1496-05	1
23	QP28-0039-10	2
24	QPA27-2296	1
25	QPA28-0015	1
26	QPA28-0016	1
27	QRE27-1736	1
28	VV10A0G16-S	2
29	VV10B0G40-S	4
30	VV10A1P20-S	1
31	VV23A9C12HL	22
32	VV31A0G16	2
34	VVB3A9N24PF	5
35*	QDF27-1156	1
36*	QDF27-2212	1
37*	QDF9518	1
39*	QDF27-1521	1
40	27-1839	1
41*	QDF2088	1
42*	QDF9028	1
43*	QDF2087	1
44	VV23A9C20HL	8
45	VV87A9A20	1
46*	M0019	1
47*	QDF2127	1

Return To Table of Contents

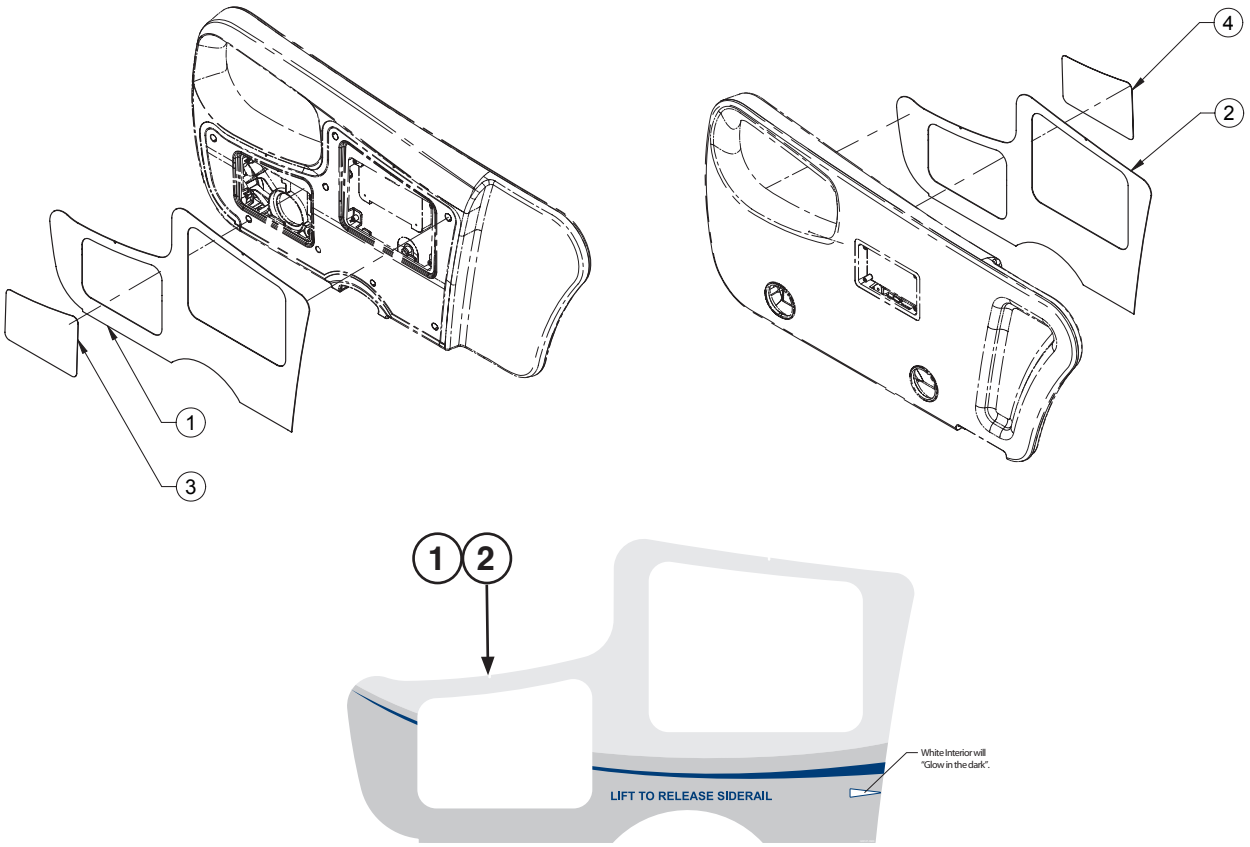

QDF27-0906-xxx - Right

1	QDF27-0906-eng	1 (English) or
	QDF27-0906-bil	1 (English/Français) or
	QDF27-0906-ger	1 (Deutsch) or
	QDF27-0906-ita	1 (Italiano) or
	QDF27-0906-dut	1 (Nederlands) or
	QDF27-0906-gre	1 (Ελληνική)
2	QDF27-0907-eng	1 (English) or
	QDF27-0907-bil	1 (English/Français) or
	QDF27-0907-ger	1 (Deutsch) or
	QDF27-0907-ita	1 (Italiano) or
	QDF27-0907-dut	1 (Nederlands) or
	QDF27-0907-gre	1 (Ελληνική)
3	QDF27-2239-eng	1 (English) or
	QDF27-2239-bil	1 (English/Français) or
	QDF27-2239-ger	1 (Deutsch) or
	QDF27-2239-ita	1 (Italiano) or
	QDF27-2239-dut	1 (Nederlands) or
	QDF27-2239-gre	1 (Ελληνική)
4	QDF27-2240-eng	1 (English) or
	QDF27-2240-bil	1 (English/Français) or
	QDF27-2240-ger	1 (Deutsch) or
	QDF27-2240-ita	1 (Italiano) or
	QDF27-2240-dut	1 (Nederlands) or
	QDF27-2240-gre	1 (Ελληνική)

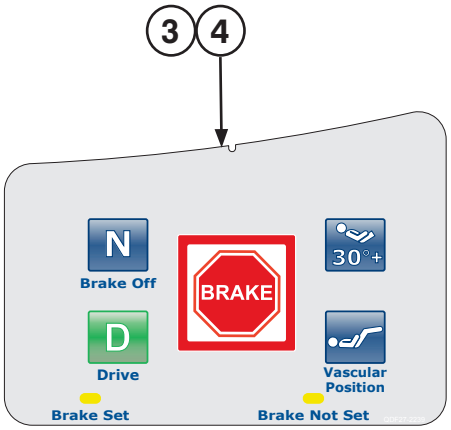

QDF27-2239-xxx - Left

Return To Table of Contents

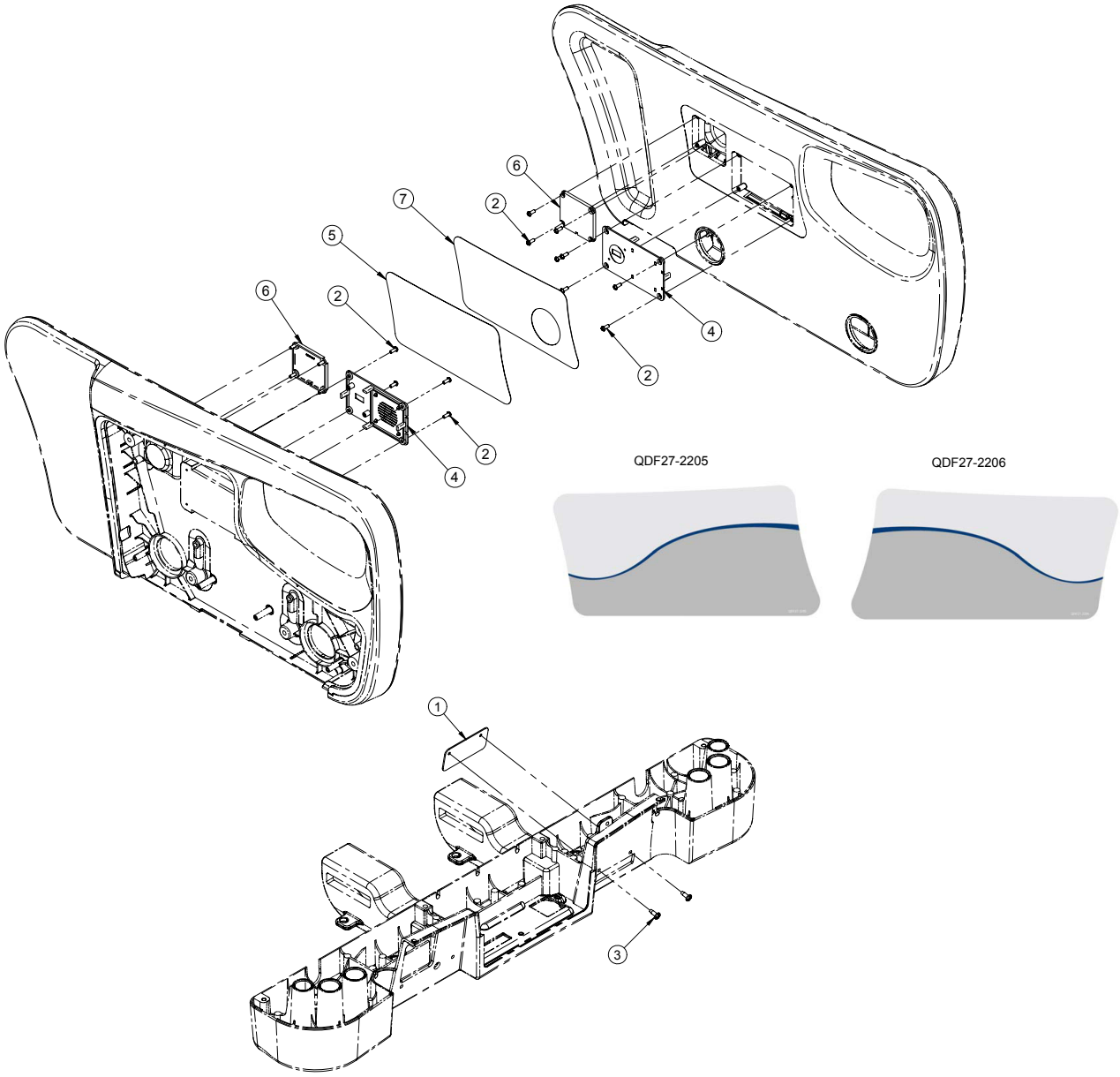

1	27-2137W	1
2	VV23A9C12HL	16
3	VV83A9G16	2
4	QP27-2136-05	2
5	QDF27-2206	1
6	QP27-2197-05	2
7	QDF27-2205	1

Return To Table of Contents

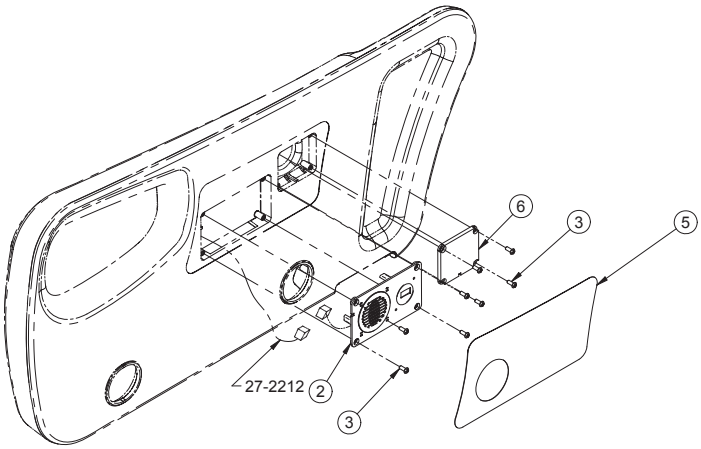

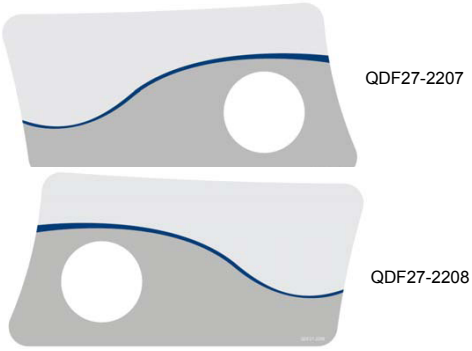

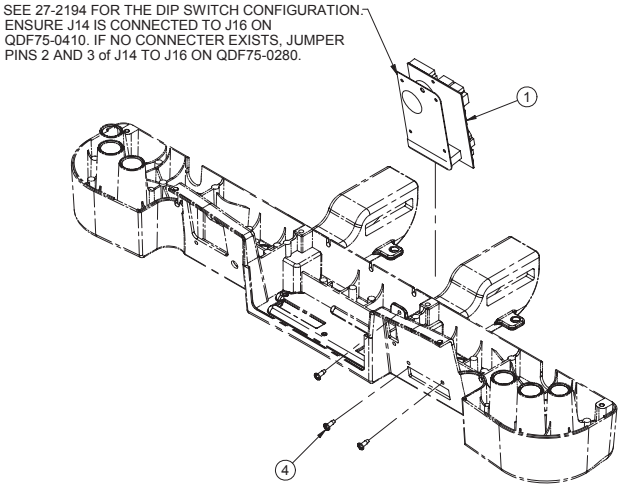

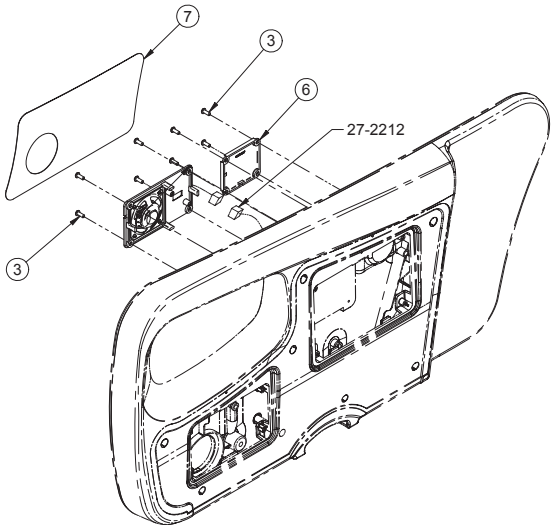

Cable No.	Cable Connection	To	Cable No.	Cable Connection
QDF27-2175	MTA-2 Positions	To	QDF27-2212	MTA-2 Positions (27-2288)
QDF27-2216	MTA-2 Positions	To	QDF27-2212	MTA-2 Positions (27-2287)

1	QDF75-0410	1
2	QDF27-2175	1
3	VV23A9C12HL	16
4	VV83A9G16	3
5	QDF27-2208	1
6	QP27-2197-05	2
7	QDF27-2207	1
8	QDF27-2216	1

Return To Table of Contents

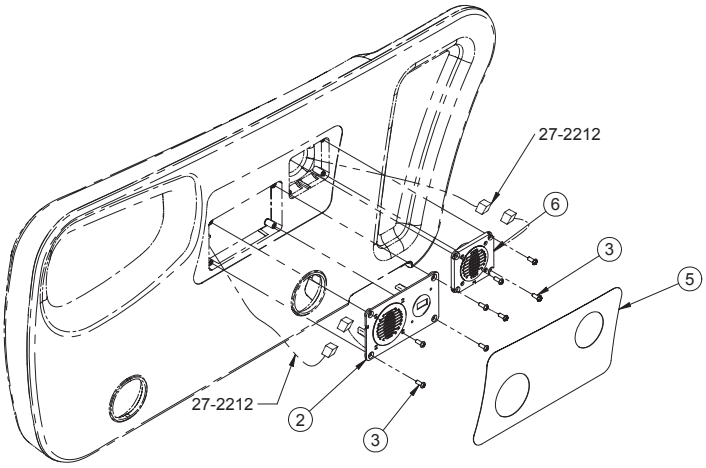

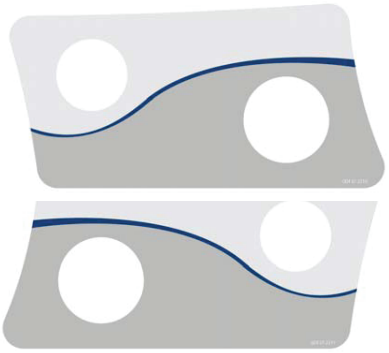

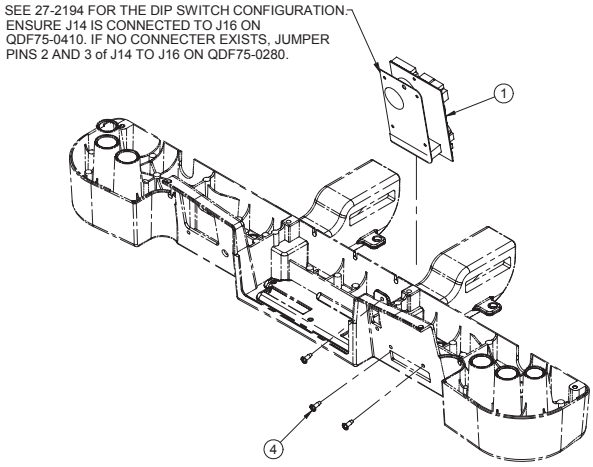

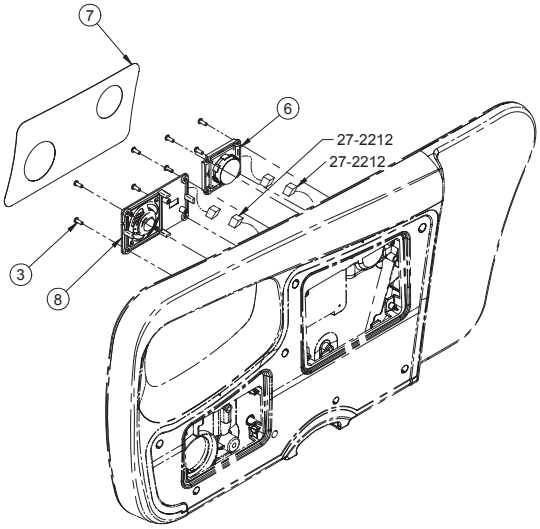

Cable No.	Cable Connection	To	Cable No.	Cable Connection
QDF27-2175	MTA-2 Positions	To	QDF27-2212	MTA-2 Positions (Siderail S.A., Left)
QDF27-2216	MTA-2 Positions	To	QDF27-2212	MTA-2 Positions (Siderail S.A., Right, HE)
QDF27-2196	2 Position Conn.	To	QDF27-2212	(Siderail S.A., Right, HE) and (Siderail S.A., Left, HE)

1	QDF75-0410	1
2	QDF27-2175	1
3	VV23A9C12HL	16
4	VV83A9G16	3
5	QDF27-2211	1
6	QDF27-2196	2
7	QDF27-2210	1
8	QDF27-2216	1

Return To Table of Contents

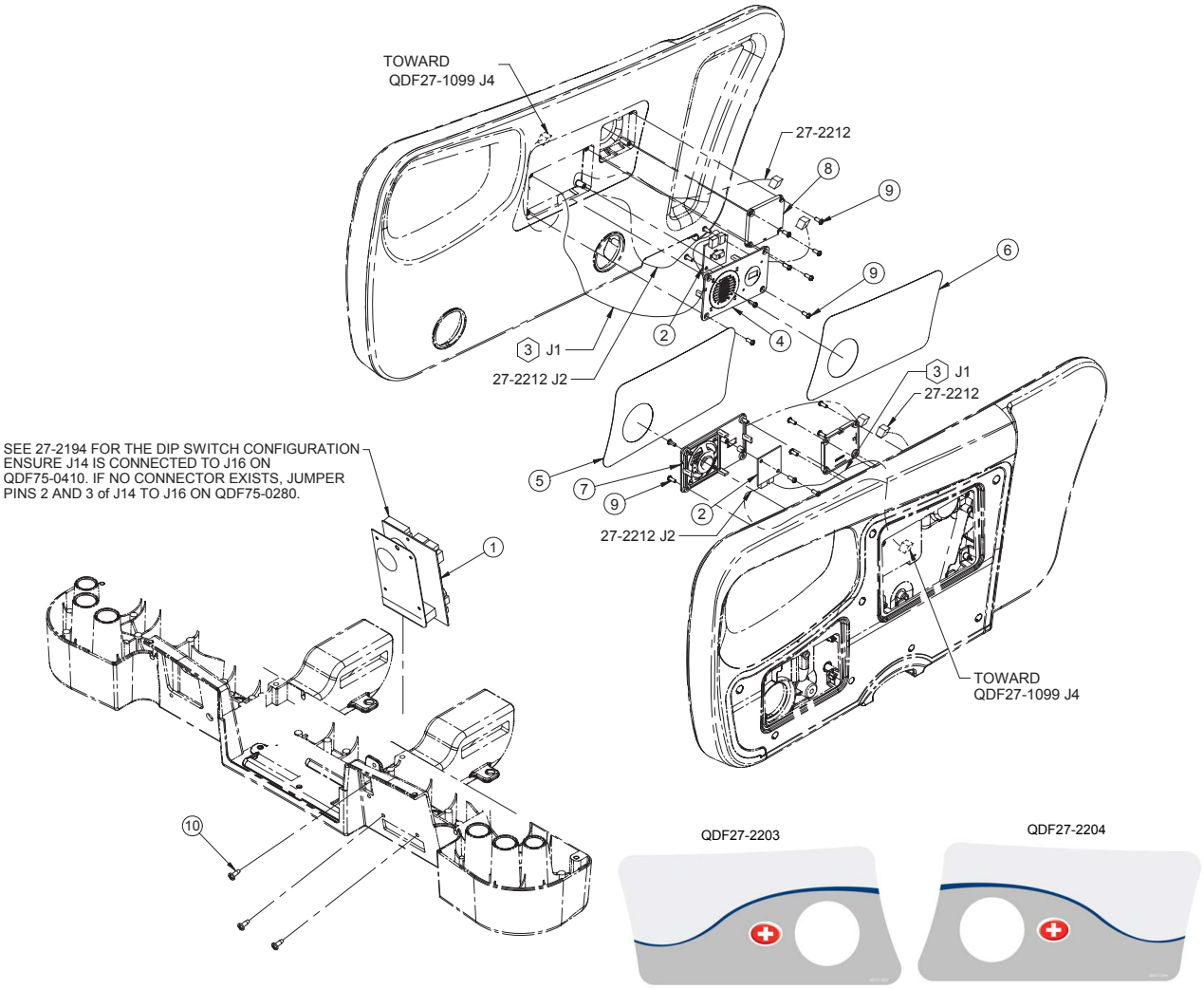

Cable No.	Connector No.	To	Cable No.	Connector No.
QDF27-2175	MTA-2 Positions	To	QDF27-2212	MTA-2 Positions (27-2288)
QDF27-1429	J1	To	QDF27-1682	MTA-3 Positions
QDF27-1429	J2	To	QDF27-1206	MTA-3 Positions (27-2287, 27-2288)
QDF27-1682	MTA-3 Positions	To	QDF27-1429	J1
QDF27-1682	MTA-3 Positions	To	QDF27-1099	J4 (27-2287, 27-2288)
QDF27-2216	MTA-2 Positions	To	QDF27-2212	MTA-2 Positions (27-2287)

1	QDF75-0410	1
2	QDF27-1429	2
3*	QDF27-1682	2
4	QDF27-2175	1
5	QDF27-2203	1
6	QDF27-2204	1
7	QDF27-2216	1
8	QP27-2197-05	2
9	VV23A9C12HL	20
10	VV83A9G16	3

Return To Table of Contents

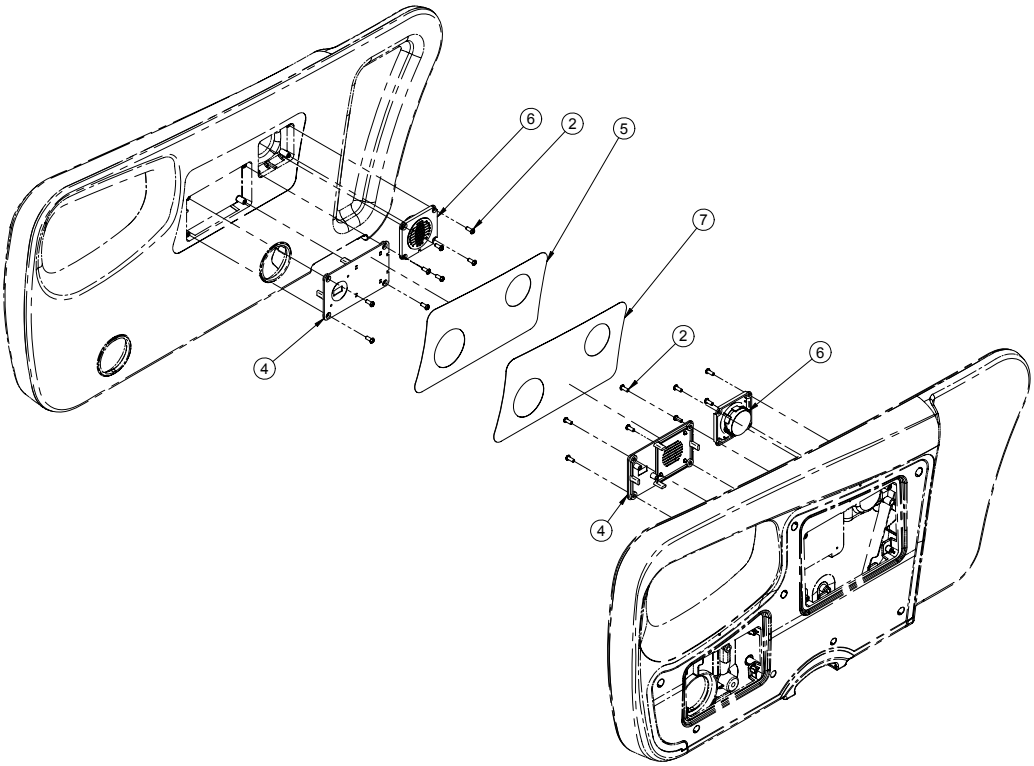

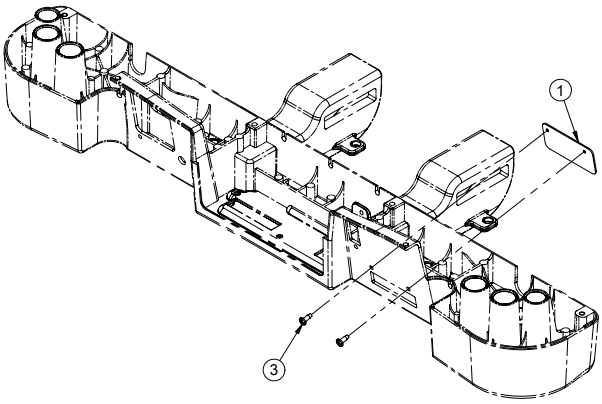

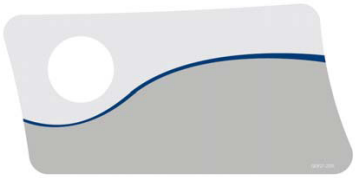

QDF27-2201

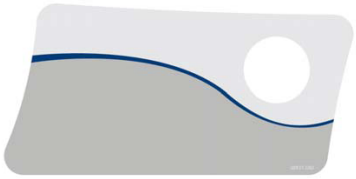

QDF27-2202

1	27-2137W	1
2	VV23A9C12HL	16
3	VV83A9G16	2
4	QP27-2136-05	2
5	QDF27-2201	1
6	QDF27-2196	2
7	QDF27-2202	1

Return To Table of Contents

For Reference Only: Part Number OL270256 Rev-00

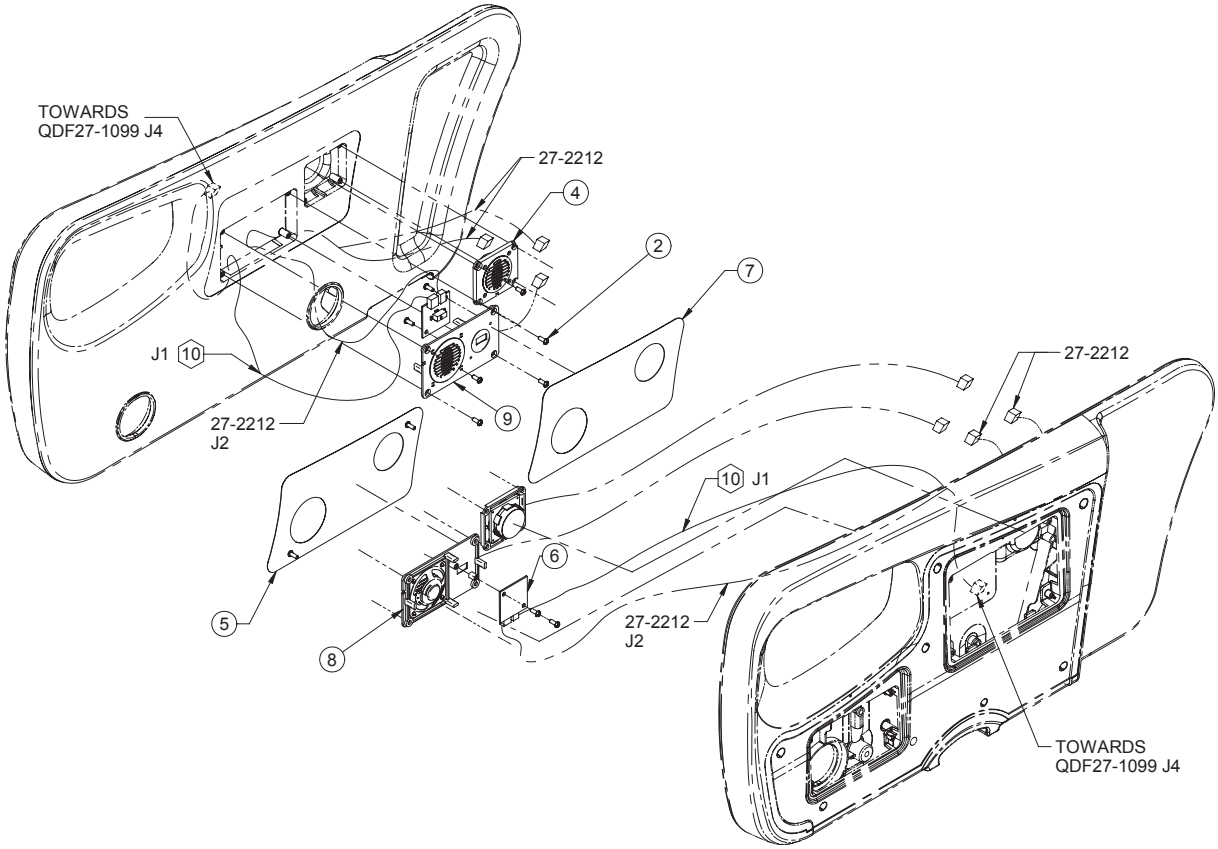

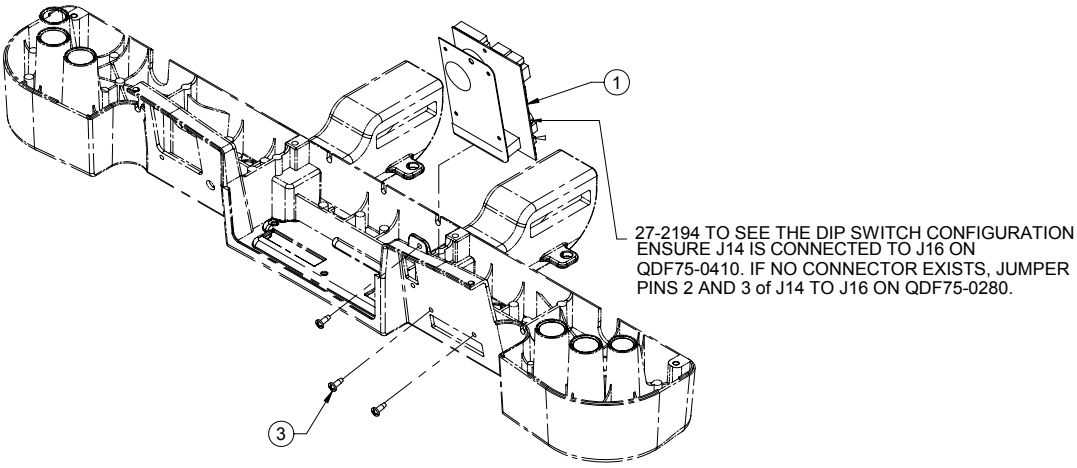

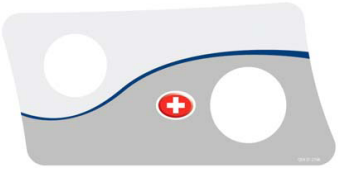

QFD27-2198

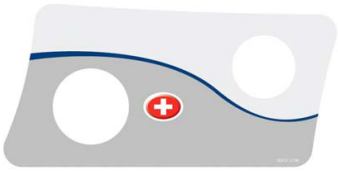

QFD27-2199

Return To Table of Contents

1	QDF75-0410	1
2	VV23A9C12HL	20
3	VV83A9G16	3
4	QDF27-2196	2
5	QDF27-2198	1
6	QDF27-1429	2
7	QDF27-2199	1
8	QDF27-2216	1
9	QDF27-2175	1
10*	QDF27-1682	1

Cable No.	Cable Connection	To	Cable No.	Cable Connection
QDF27-2175	MTA-2 Positions	To	QDF27-2212	MTA-2 Positions (27-2288)
QDF27-1429	J1	To	QDF27-1682	MTA-3 Positions
QDF27-1429	J2	To	QDF27-1206	MTA-3 Positions (27-2287, 27-2288)
QDF27-1682	MTA-3 Positions	To	QDF27-1429	J1
QDF27-1682	MTA-3 Positions	To	QDF27-1099	J4 (27-2287 & 27-2288)
QDF27-2216	MTA-2 Positions	To	QDF27-2212	MTA-2 Positions (27-2287)
QDF27-2196	CONN 2 Positions	To	QDF27-2212	(27-2287, 27-2288)

Return To Table of Contents

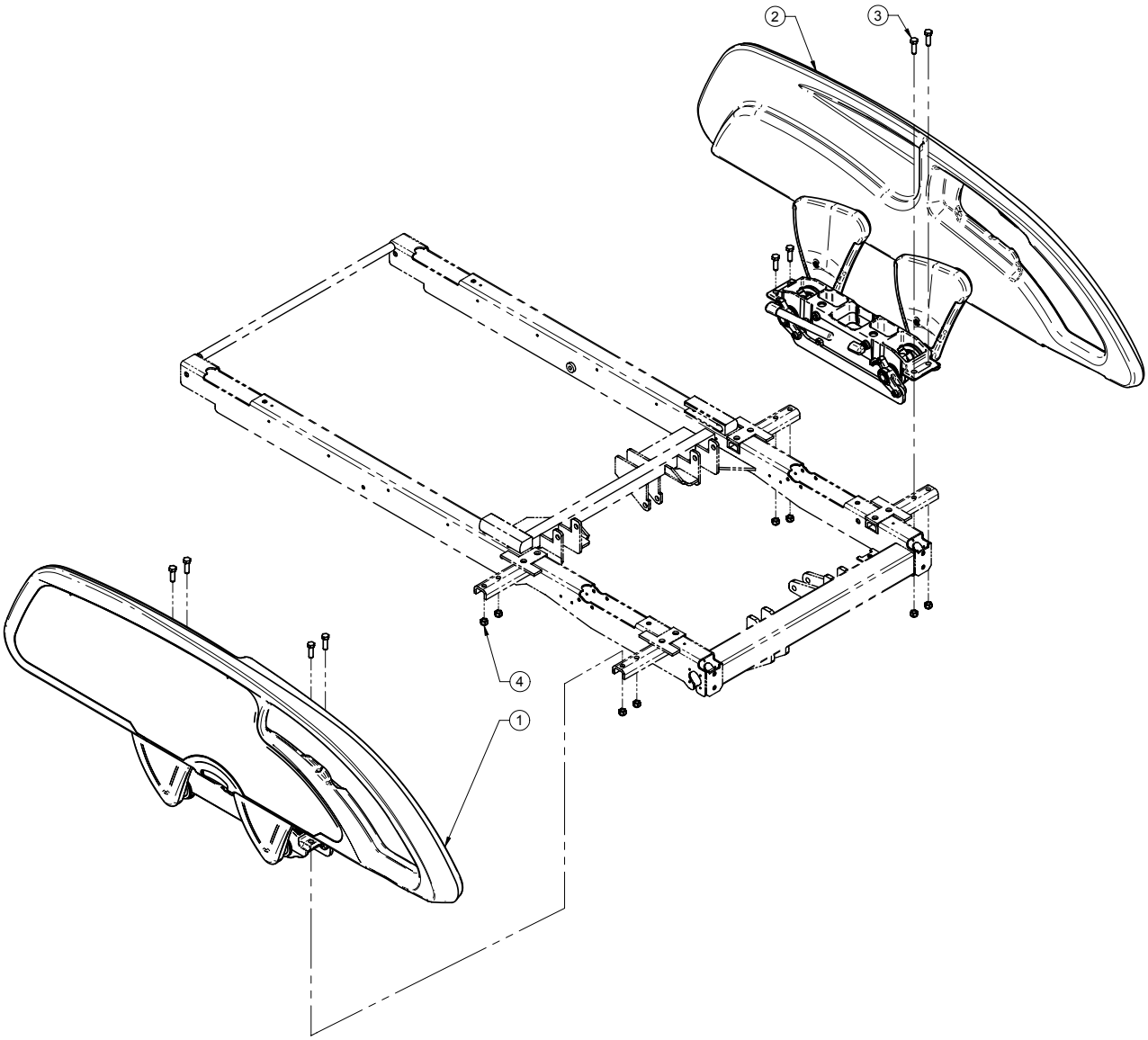

1	27-2289W	1
2	27-2290W	1
3	VB18A1O32	8
4	VE30A1O	8

Return To Table of Contents

PART QP28-0039 IS OF GRAY COLOR - CODE OF COLOR:10

21 T35±3.5

B'

TOWARDS FRAME

B

39 LUBRICATE

A 37

36

A

T22 ±2

37 B

SEE SIDERAIL OPTION

RACEWAY

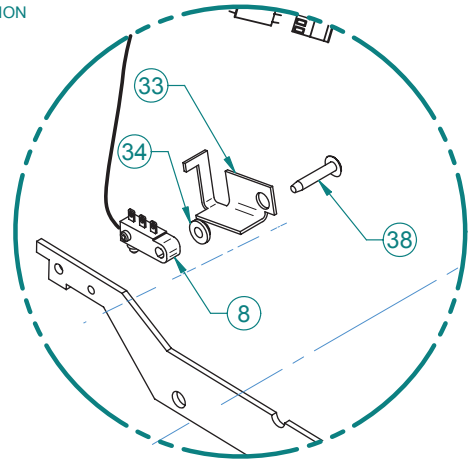

DETAIL A

Return To Table of Contents

POSITION ON CONNECTOR			
Cable No.	**Connector No.**	**Cable No.**	**Connector No.**
QDF27-1521	MTA-100 3 Positions	QDF27-1208	MTA-100 3 Positions
QDF27-1208	MTA-100 3 Positions	QDF27-1521	MTA-100 3 Positions
QDF27-1208	Mate N Lock 3 Positions	QDF27-1481	J172 (L27-053)

POSITION ON CONNECTOR				
Cable QDF27-1208 (7)	**Signal**	**Color**	**Position on Connector (37)(A)**	**Position on Connector (37)(B)**
1	NO SWITCH	White	1	-
2	COM SWITCH	Black	2	-
3	NC SWITCH	Green	3	-
4	LED1 LBS	Orange	-	1
5	+12V	Red	-	2
6	LED2 LBS	Blue	-	3

1	QPA28-0493	1
3	QDF27-2574Z	1
4	27-2575	1
5	27-2060W	1
6	QDF2049	4
7	QDF27-1208	1
8	QDF27-1521	1
9	QDF28-0491	1
11	QP27-1263-05	1
12	QP27-1267-05	1
13	QP27-1274-08	1
14	QP27-1508-05	1
15	QP28-0039-10	2
16	QPA27-2297	1
17	QPA28-0015	1
18	QPA28-0016	1
19	QRE27-1736	1
20	VV10A0G16-S	2
21	VV10B0G40-S	4
22	VV10A1P20-S	1
23	VV23A9C12HL	15
24	VV31A0G16	2
26	VVB3A9N24PF	6
27	QRE28-0293	1
33	27-2293Z	1
34	27-1839	1
36	QDF2080	1
37	QDF2099	2
38	VV87A9A20	1
39	M0019	1
40	QDF5096	1
41	QDF9518	1

Return To Table of Contents

PART QP28-0039 IS OF GRAY COLOR - CODE OF COLOR:10

T35±3.5

TOWARDS FRAME

T22 ±2

SEE SIDERAIL OPTION

RACEWAY

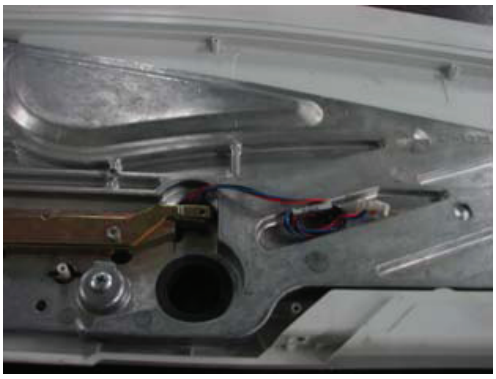

DETAIL A

POSITION ON CONNECTOR			
Cable No.	**Connector No.**	**Cable No.**	**Connector No.**
QDF27-1521	MTA-100 3 Positions	QDF27-1208	MTA-100 3 Positions
QDF27-1208	MTA-100 3 Positions	QDF27-1521	MTA-100 3 Positions
QDF27-1208	Mate N Lock 3 Positions	QDF27-1481	J172 (L27-053)

POSITION ON CONNECTOR				
Cable QDF27-1208 (24)	**Signal**	**Color**	**Position on Connector (29)(A)**	**Position on Connector (29)(B)**
1	NO SWITCH	White	1	-
2	COM SWITCH	Black	2	-
3	NC SWITCH	Green	3	-
4	LED1 LBS	Orange	-	1
5	+12V	Red	-	2
6	LED2 LBS	Blue	-	3

1	QDF28-0491	1
3	QDF-2574Z	1
4	27-2575Z	1
5	QP27-1264-05	1
6	27-2061W	1
7	QDF2049	4
8	QDF27-1521	1
9	QPA28-0493	1
10	QP27-1268-05	1
11	QP27-1273-08	1
12	QP28-0040-10	2
13	QPA27-2298	1
14	QPA28-0015	1
15	QPA28-0016	1
16	QRE27-1736	1
17	VV10A0G16-S	2
18	VV10B0G40-S	4
19	VV10A1P20-S	1
20	VV23A9C12HL	15
21	VV31A0G16	2
23	VVB3A9N24PF	6
24	QDF27-1208	1
26	QRE28-0293	1
27	QP27-1509-05	1
28	QDF2080	1
29	QDF2099	2
33	27-2292Z	1
34	27-1839	1
35	VV87A9A20	1
36	QDF5096	1
37	QDF9518	1

Return To Table of Contents

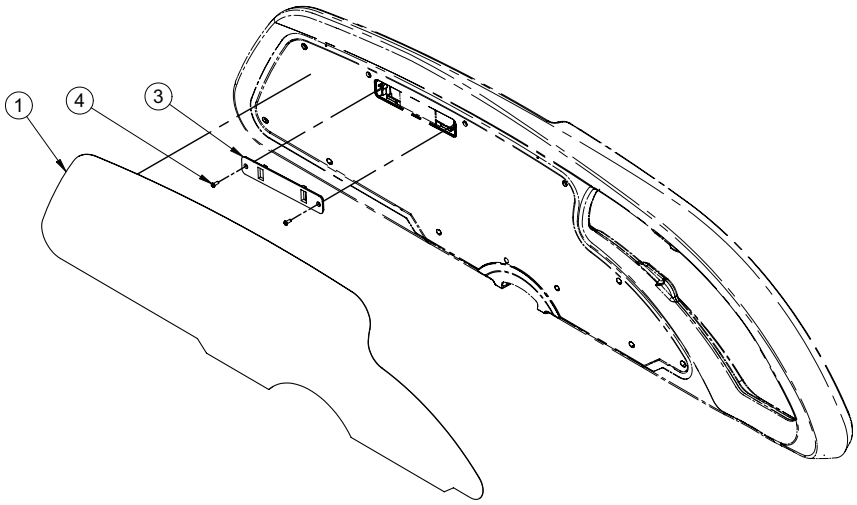

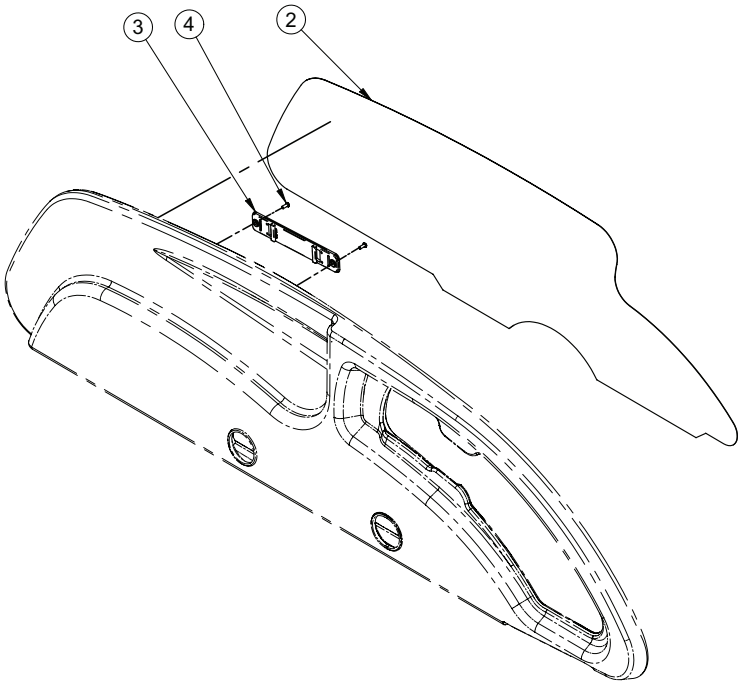

1	QDF27-0909-eng	1 (English) or
	QDF27-0909-bil	1 (English/Français) or
	QDF27-0909-ger	1 (Deutsch) or
	QDF27-0909-ita	1 (Italiano) or
	QDF27-0909-dut	1 (Nederlands) or
	QDF27-0909-gre	1 (Ελληνική)
2	QDF27-0910-eng	1 (English) or
	QDF27-0910-bil	1 (English/Français) or
	QDF27-0910-ger	1 (Deutsch) or
	QDF27-0910-ita	1 (Italiano) or
	QDF27-0910-dut	1 (Nederlands) or
	QDF27-0910-gre	1 (Ελληνική)
3	QP27-1831	2
4	VV23A9C12HL	4

Return To Table of Contents

Postion on Wire 27-1834	Postion on Connector	Postion on Wire 27-1208	Signal
1	1	1	LED 1
2	2	2	LED 2
3	3	3	+12V

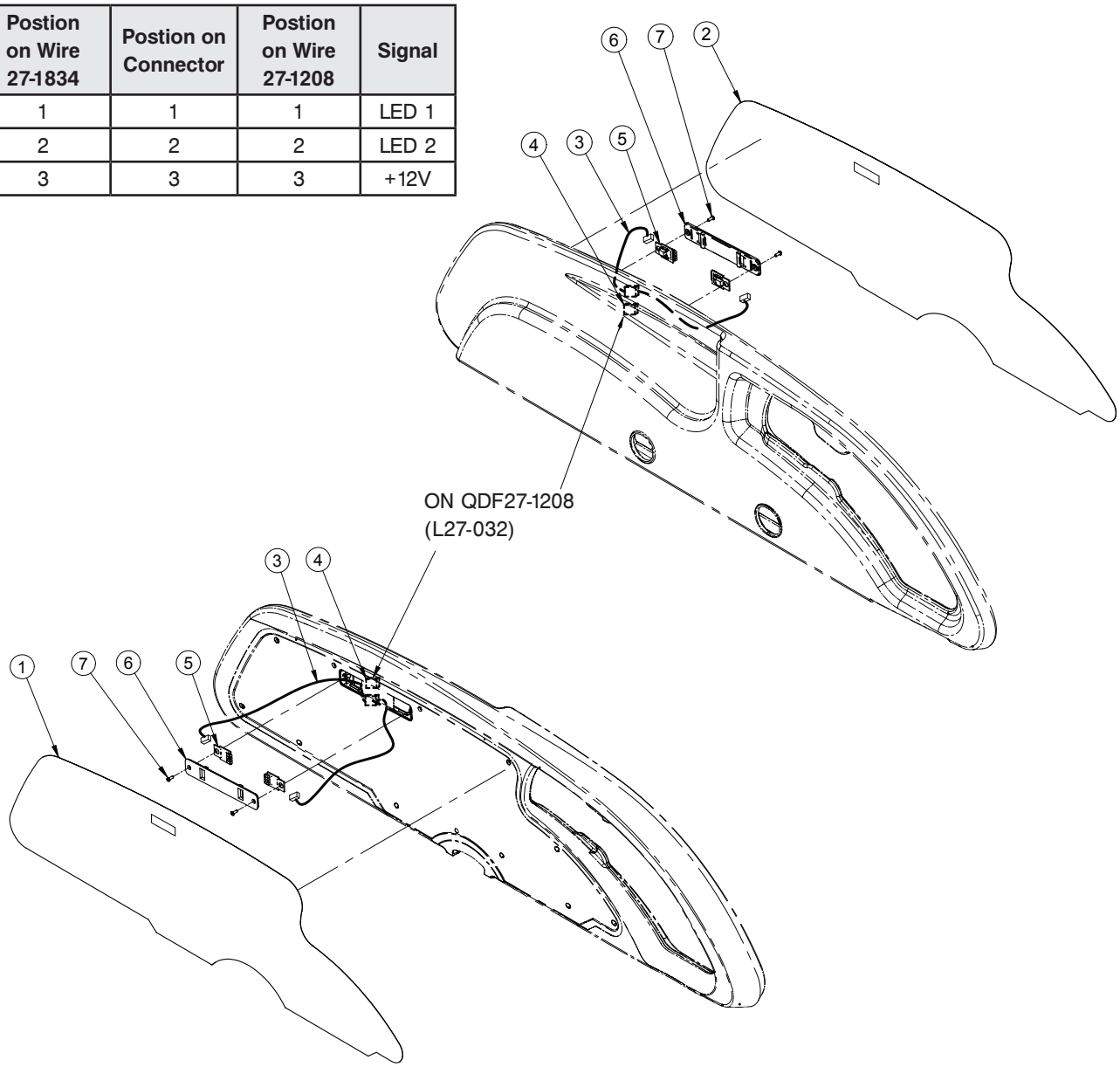

1	QDF27-2030-eng	1 (English) or
	QDF27-2030-bil	1 (English/Français) or
	QDF27-2030-ger	1 (Deutsch) or
	QDF27-2030-ita	1 (Italiano) or
	QDF27-2030-dut	1 (Nederlands) or
	QDF27-2030-gre	1 (Ελληνική)
1	QDF27-2031-eng	1 (English) or
	QDF27-2031-bil	1 (English/Français) or
	QDF27-2031-ger	1 (Deutsch) or
	QDF27-2031-ita	1 (Italiano) or
	QDF27-2031-dut	1 (Nederlands) or
	QDF27-2031-gre	1 (Ελληνική)
3	QDF27-1834	2
4	QDF2080	2
5	QDF27-1562	4
6	QP27-1831	2
7	VV23A9C12HL	4

Return To Table of Contents

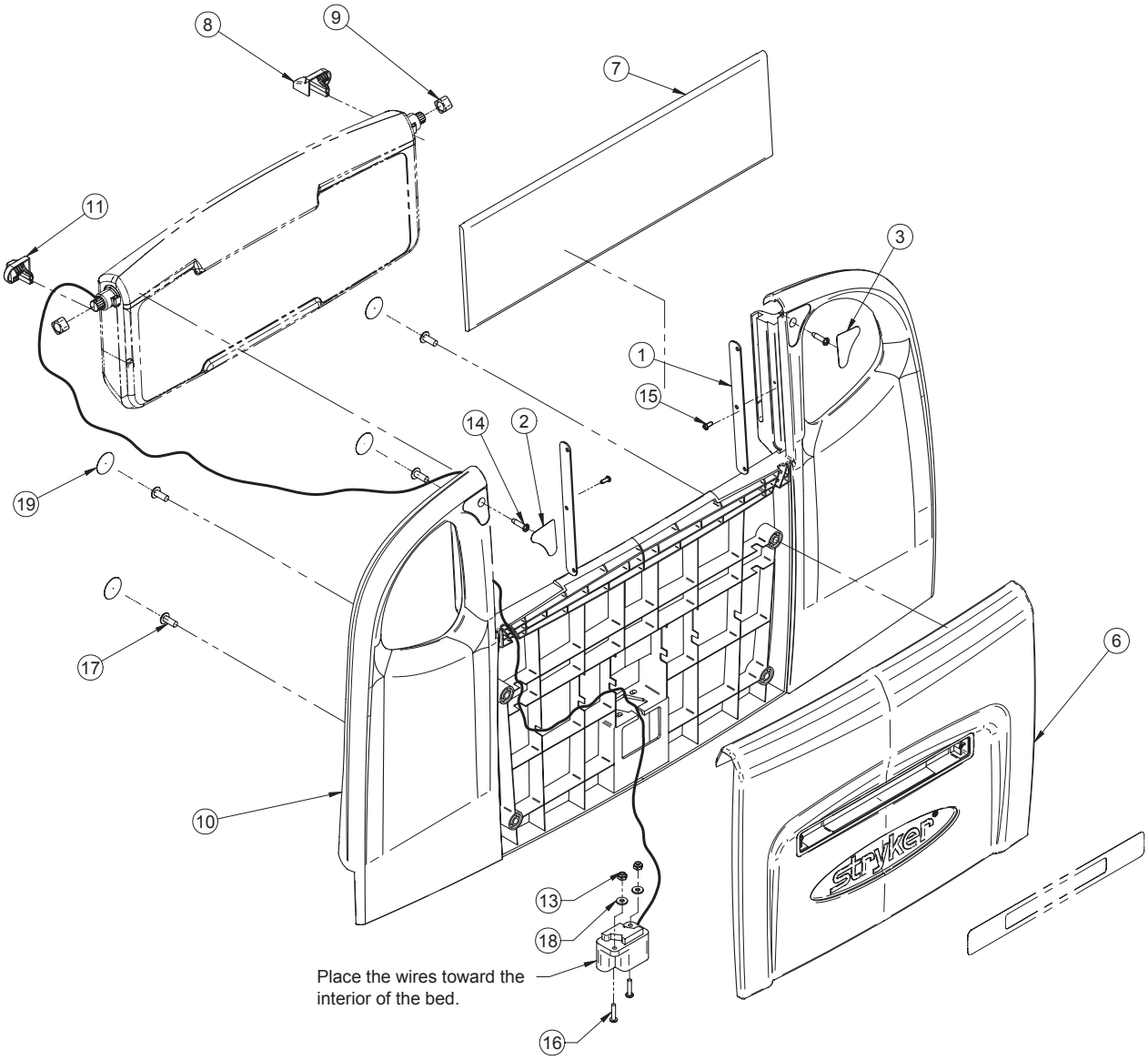

1	27-2274W	2
2	QDF27-1601	1
3	QDF27-1602	1
6	QP27-1026-10	1
7	QP27-1359-10	1
8	QP27-1493-05	1
9	QP27-1511	2
10	QP27-1538-05	1
11	QP27-1569-05	1
13	VE30A1E	2
14	VV23A1G24HL	2
15	VV23A9C12HL	2
16	VV33A1E24	2
17	VV37A1N20-S	4
18	VW11A9E	2
19	QDF21-3943	4

Return To Table of Contents

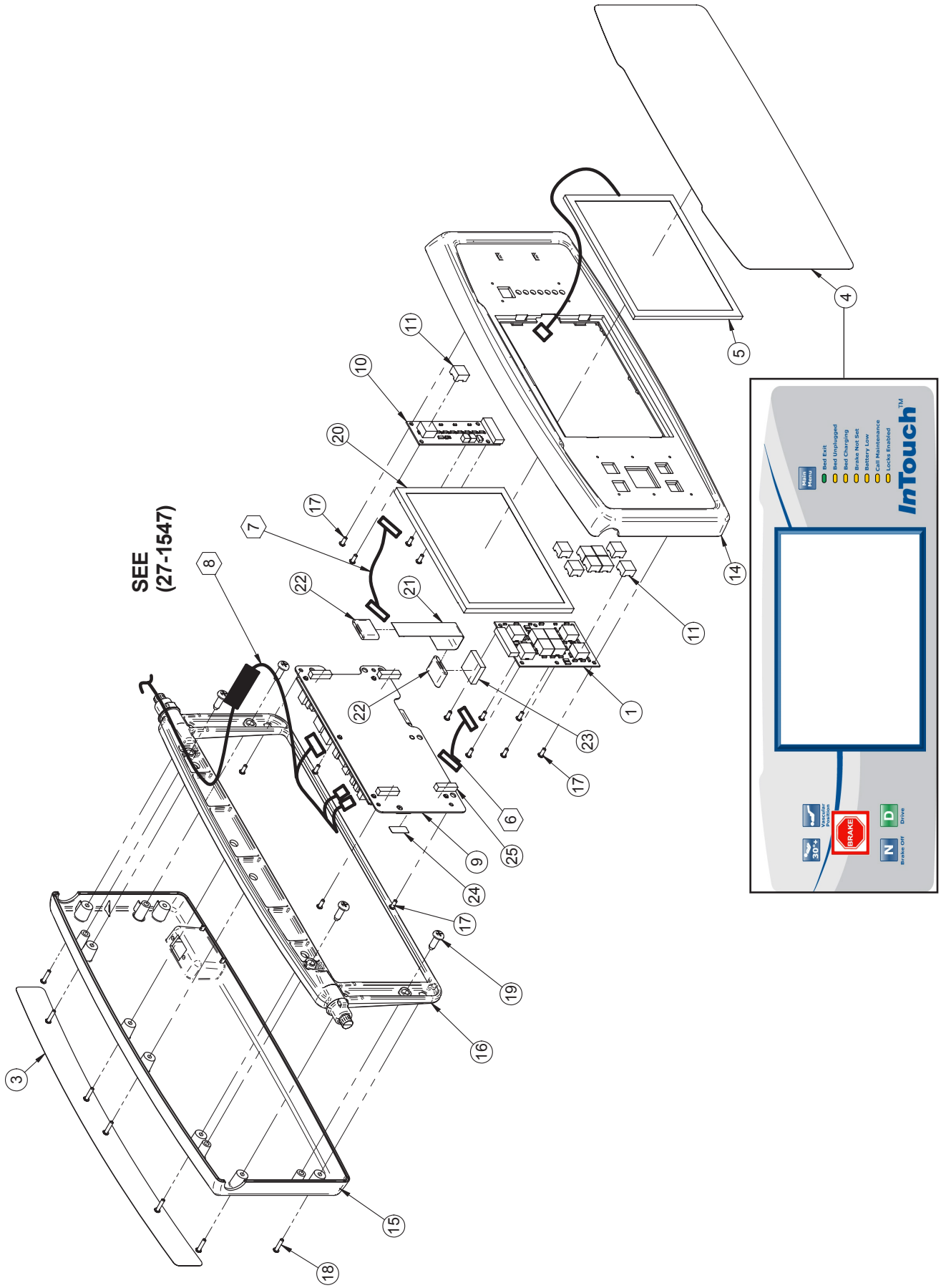

Return To Table of Contents

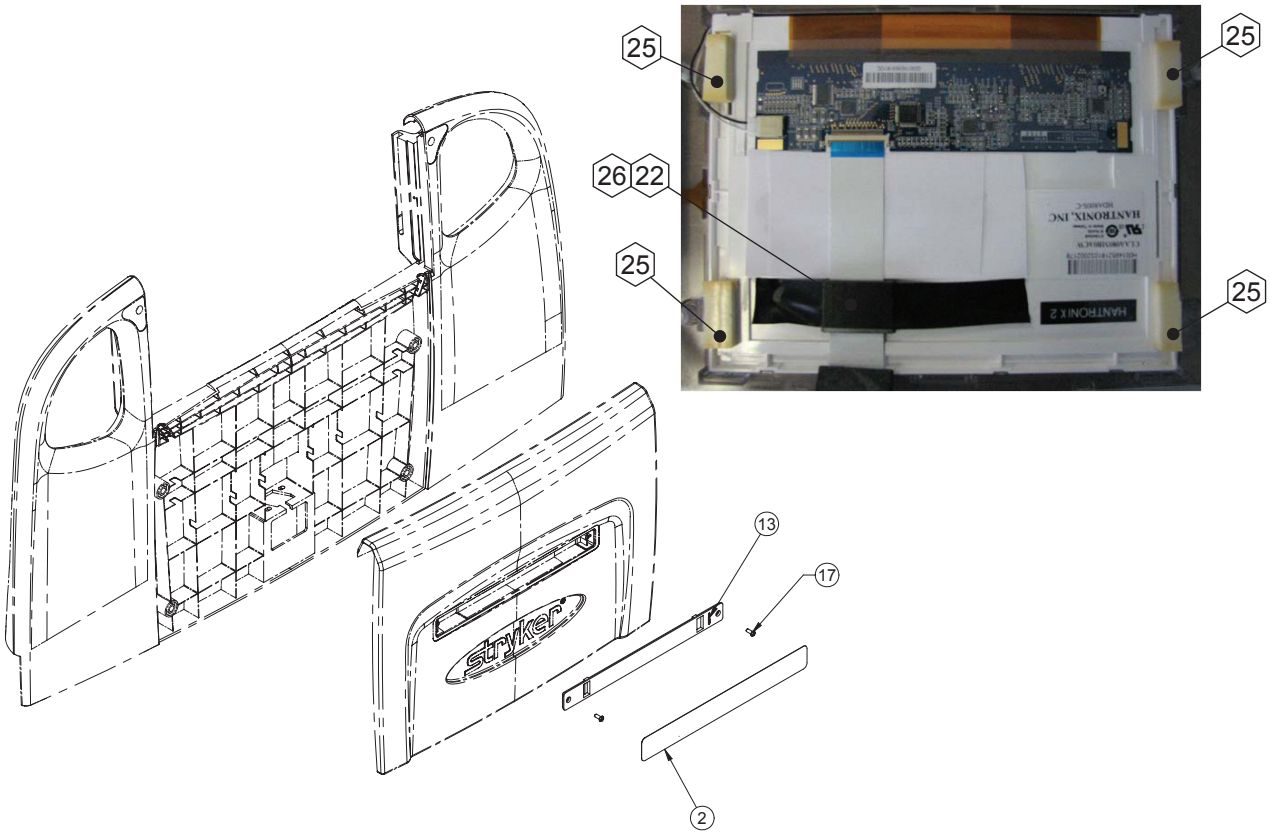

QDF75-0290 BOARD ASSEMBLY

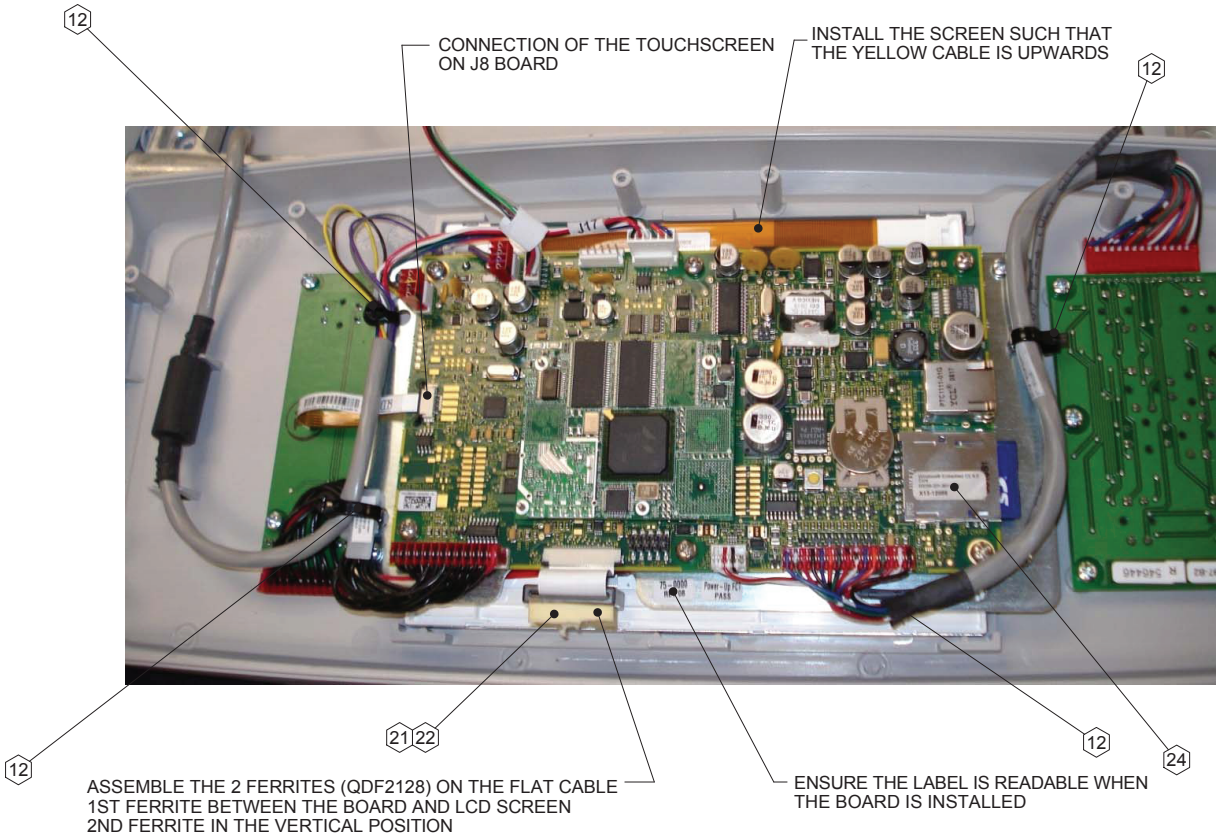

Return To Table of Contents

CABLE CONNECTION				
Cable No.	**Connector No.**	**To**	**Cable No.**	**Connector No.**
QDF27-2229	Connector MTA 15 Positions	To	QDF75-0290	J12 (Interface Board)
QDF27-2229	Connector MTA 15 Positions	To	QDF27-1097	J1 (Brake Board)
QDF27-2230	Connector MTA 13 Positions	To	QDF75-0290	J6 (Interface Board)
QDF27-2230	Connector MTA 13 Positions	To	QDF75-0010	J1 (Menu Board)
QDF27-2232	Connector Metrimate 19 Pos.	To	QDF27-2214	Con. Metrimate (27-2559)
QDF27-2232	Connector MTA 4 Positions J1	To	QDF75-0290	J1 (Interface Board)
QDF27-2232	Connector MTA 4 Positions J19	To	QDF75-0290	J19 (Interface Board)
QDF27-2232	Connector MTA 6 Positions	To	QDF75-0290	J17 (Interface Board)
QDF27-2193	Touch Screen	To	QDF75-0290	J3 (Interface Board)
QDF2129	Flat Connector	To	QDF75-0290	J7 (Interface Board)
QDF2129	Flat Connector	To	QDF2125	(LCD Screen)

1	QDF27-1097	1
2	QDF27-2054	1
3	QDF27-1768	1
4	QDF27-2054	1
5	QDF27-1768	1
6*	QDF27-2188	1
7*	QDF2230	1
8*	QDF27-2232	1
9	QDF75-0290	1
10	QDF75-0010	1
11	QDF9183	9
12*	QDF9518	1
13	QP27-1609	1
14	QP27-2185-10	1
15	QP27-2186-10	1
16	QPA27-1494	1
17	VV23A9C12HL	16
18	VV23A9C20HL	8
19	VVB3A9N24PF	4
20	QDF2125	1
21	QDF2129	1
22	QDF2128	2
23	QDF5101	1
24	QDF27-2279	1
25	QDF5101	1
26*	QDF2053	1
27*	75-0294	1

Return To Table of Contents

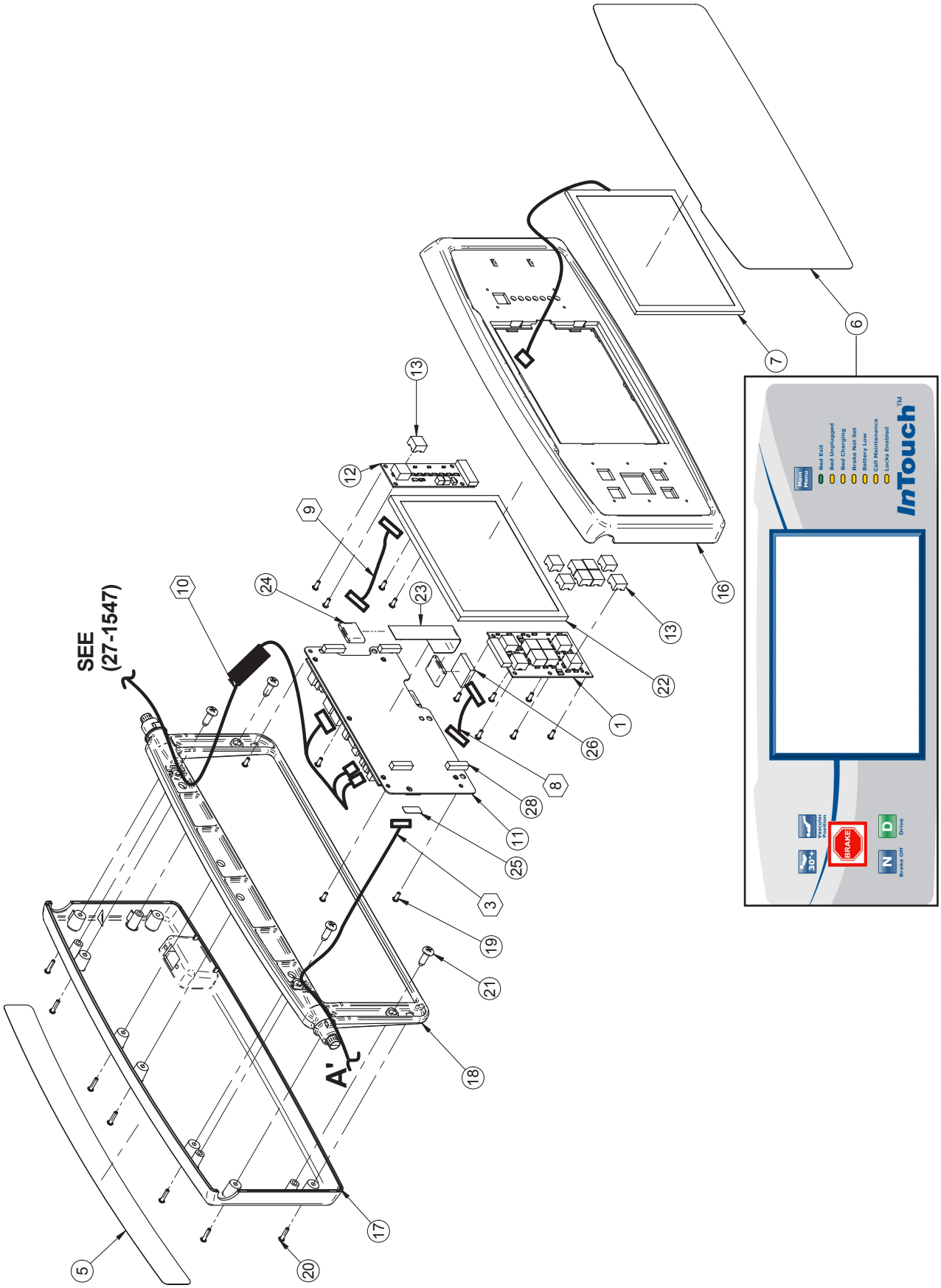

Return To Table of Contents

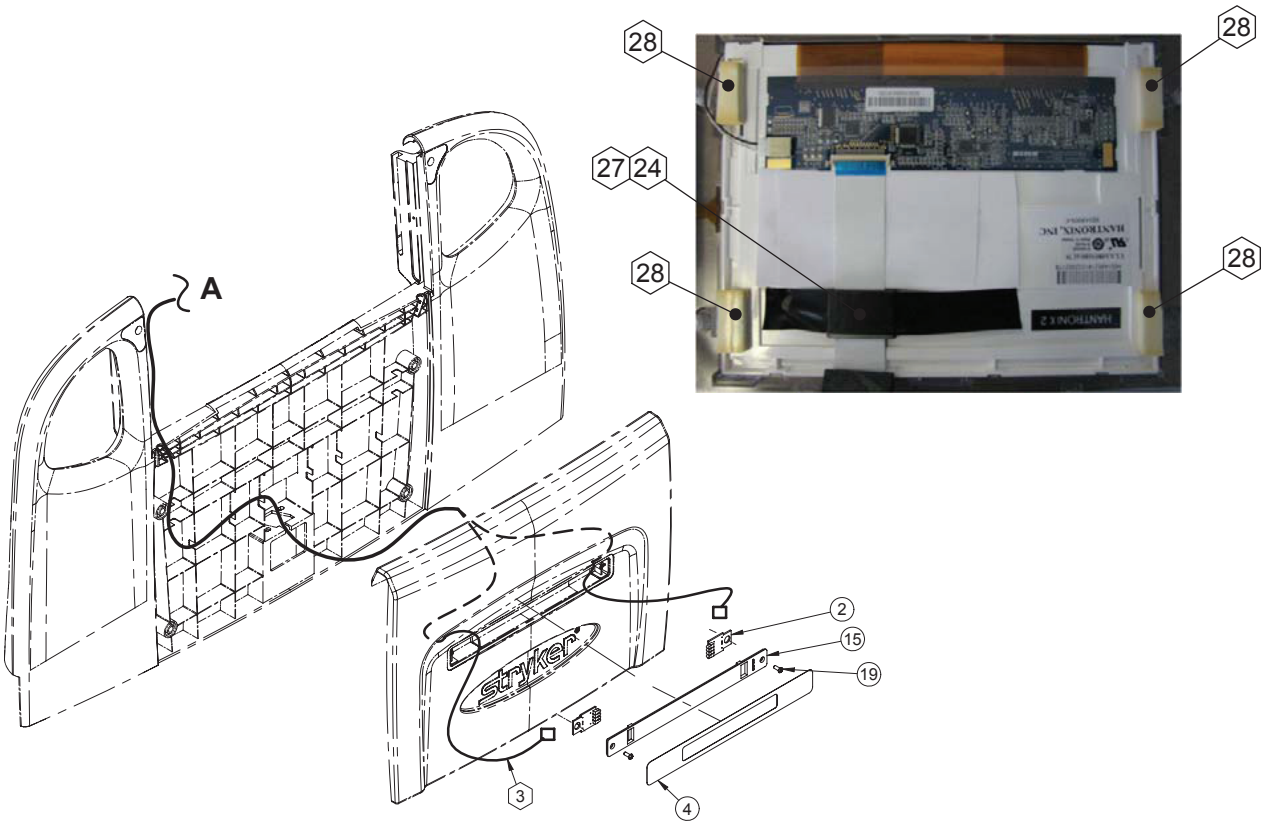

QDF75-0290 BOARD ASSEMBLY

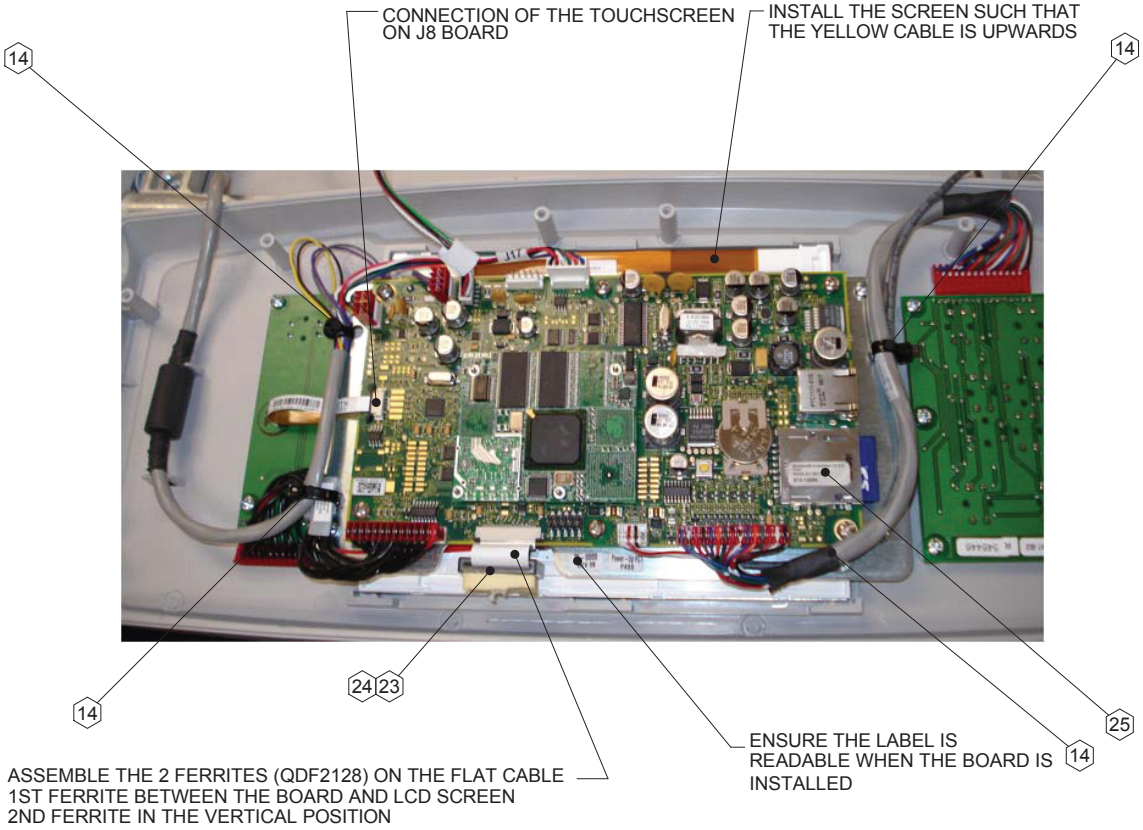

Return To Table of Contents

CABLE CONNECTION				
Cable No.	**Connector No.**	**To**	**Cable No.**	**Connector No.**
QDF27-2253	Connector MTA	To	QDF27-1562	Left Side
QDF27-2253	Connector MTA	To	QDF27-1562	Right Side
QDF27-2253	Con. MTA 4 Pos.	To	QDF75-0290	J9 (Interface Board)
QDF27-2229	Con. MTA 15 Pos.	To	QDF75-0290	J12 (Interface Board)
QDF27-2229	Con. MTA 15 Pos.	To	QDF27-1097	J1 (Brake Board)
QDF27-2230	Con. MTA 13 Pos.	To	QDF75-0290	J6 (Interface Board)
QDF27-2230	Con. MTA 13 Pos.	To	QDF75-0010	J1 (Menu Board)
QDF27-2232	Con. Metrimate 19 Pos.	To	QDF27-1213	Con. Metrimate (27-1661)
QDF27-2232	Con. MTA 4 Pos. J1	To	QDF75-0290	J1 (Interface Board)
QDF27-2232	Con. MTA 4 Pos. J19	To	QDF75-0290	J19 (Interface Board)
QDF27-2232	Con. MTA 6 Pos.	To	QDF75-0290	J17 (Interface Board)
QDF27-2193	Touch Screen	To	QDF75-0290	J3 (Interface Board)
QDF2129	Flat Connector	To	QDF75-0290	J7 (Interface Board)
QDF2129	Flat Connector	To	QDF2125	(LCD Screen)

1	QDF27-1097	1
2	QDF27-1562	2
3*	QDF27-2253	1
4	QDF27-1610	1
5	QDF27-1768	1
6	QDF27-2188	1
6	QDF27-2188-eng	1 (English) or
	QDF27-2188-bil	1 (English/Français) or
	QDF27-2188-ger	1 (Deutsch) or
	QDF27-2188-ita	1 (Italiano) or
	QDF27-2188-dut	1 (Nederlands) or
	QDF27-2188-gre	1 (Ελληνική)
7	QDF27-2193	1
8*	QDF27-2229	1
9*	QDF27-2230	1
10*	QDF27-2232	1
11	QDF75-0290	1
12	QDF75-0010	1
13	QDF9183	9
14*	QDF9518	1
15	QP27-1609	1
16	QP27-2185-10	1
17	QP27-2186-10	1
18	QPA27-1494	1
19	VV23A9C12HL	16
20	VV23A9C20HL	8
21	VVB3A9N24PF	4
22	QDF2125	1
23	QDF2129	1
24	QDF2128	2
25	QDF27-2279	1
26	QDF5101	1
27*	QDF2053	1
28	QDF5101	4
29*	75-0424	1

Return To Table of Contents

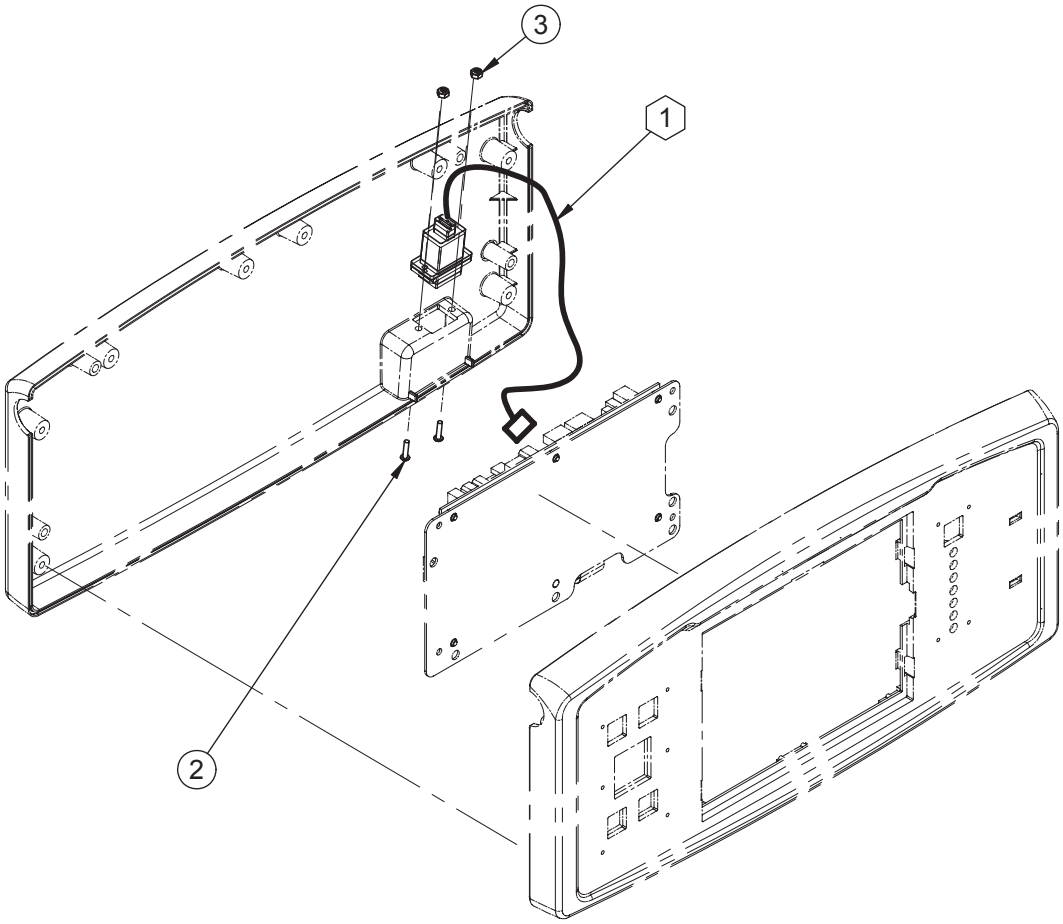

POSITION ON CONNECTOR			
Cable No.	**Connector No.**	**Cable No.**	**Connector No.**
QDF27-2231	USB connector	QDF27-2186-10	N/A
QDF27-2231	CON. 16POS 2mm	QDF75-0290	J18

1	QDF27-2231	1
2	VV33AOA16	2
3	VE39A0A	2

Return To Table of Contents

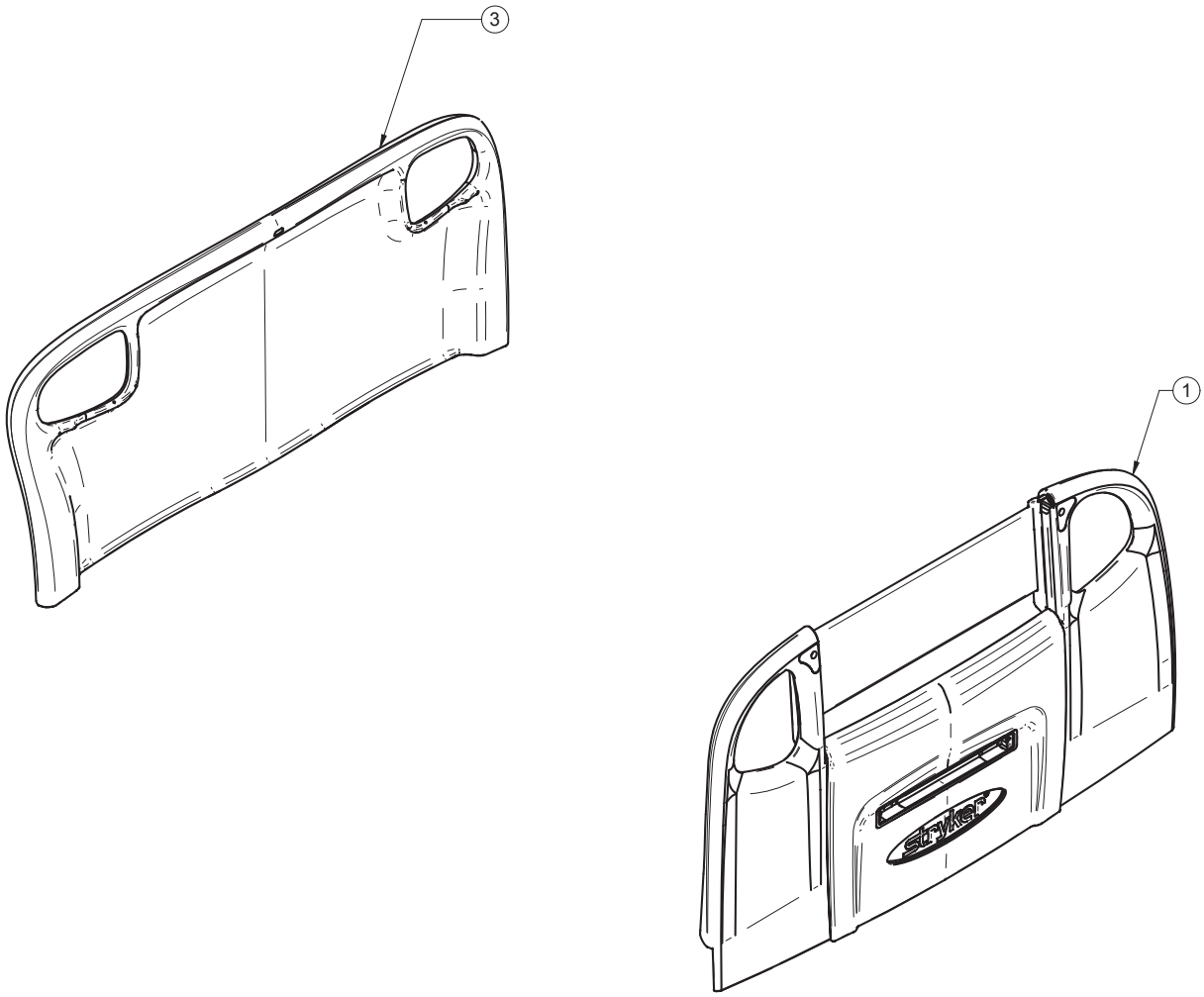

1	27-1547	1
3	QP27-1077-05	1

Return To Table of Contents

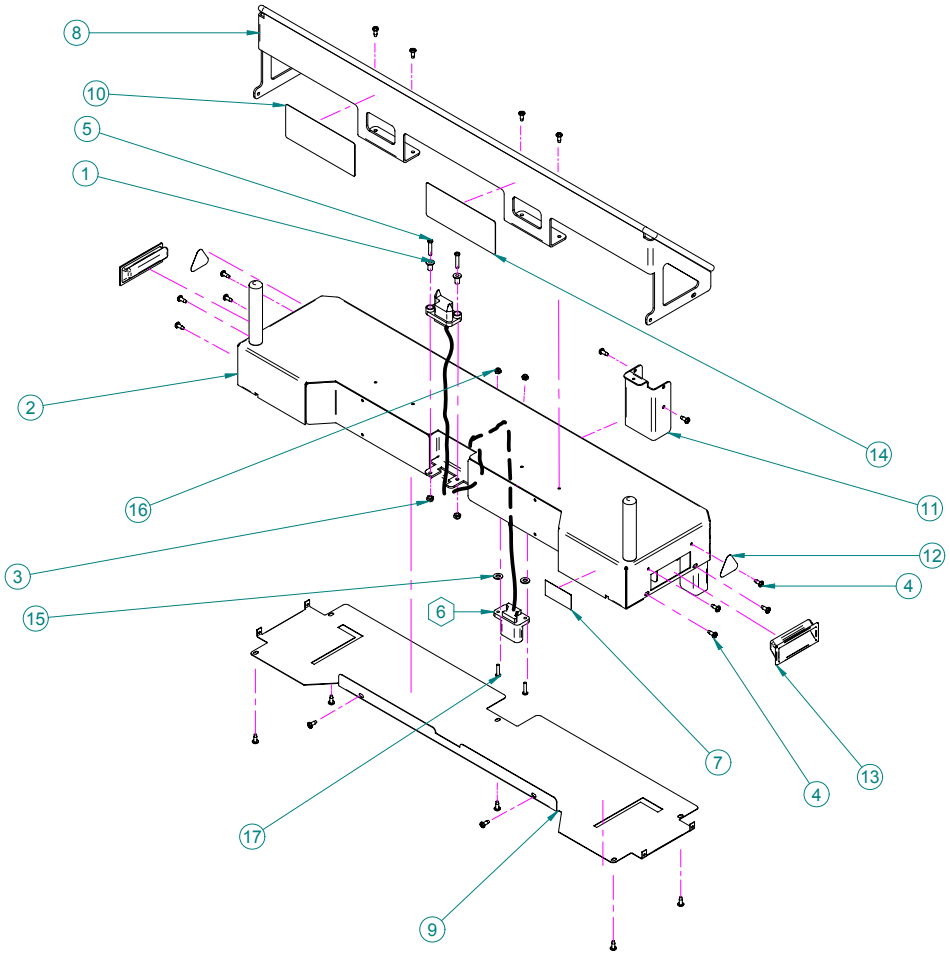

1	25-0527Z	2
2	64-1158W	1
3	VE30A0G	2
4	VV83A9G16	21
5	VV31A0G32	2
6	QDF64-1358	1
7	QE14399-T	1
8	64-1271W	1
9	64-1278W	1
10	QE71-1112-F	1
11	64-1284W	1
12	QE71-0533	2
13	QDF6029	2
14	QE71-1132-F	1
15	VW10C081802	2
16	VE30A1E	2
17	VV33A1E24	2

Return To Table of Contents

DM64197

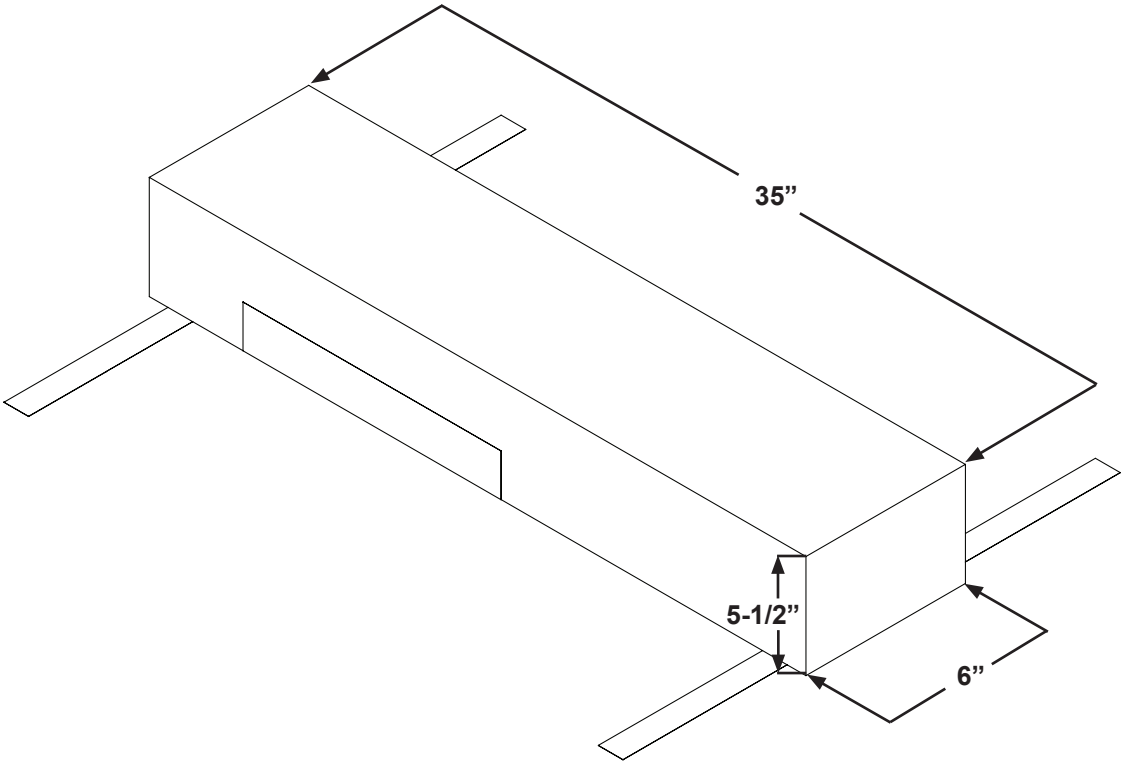

DM64196

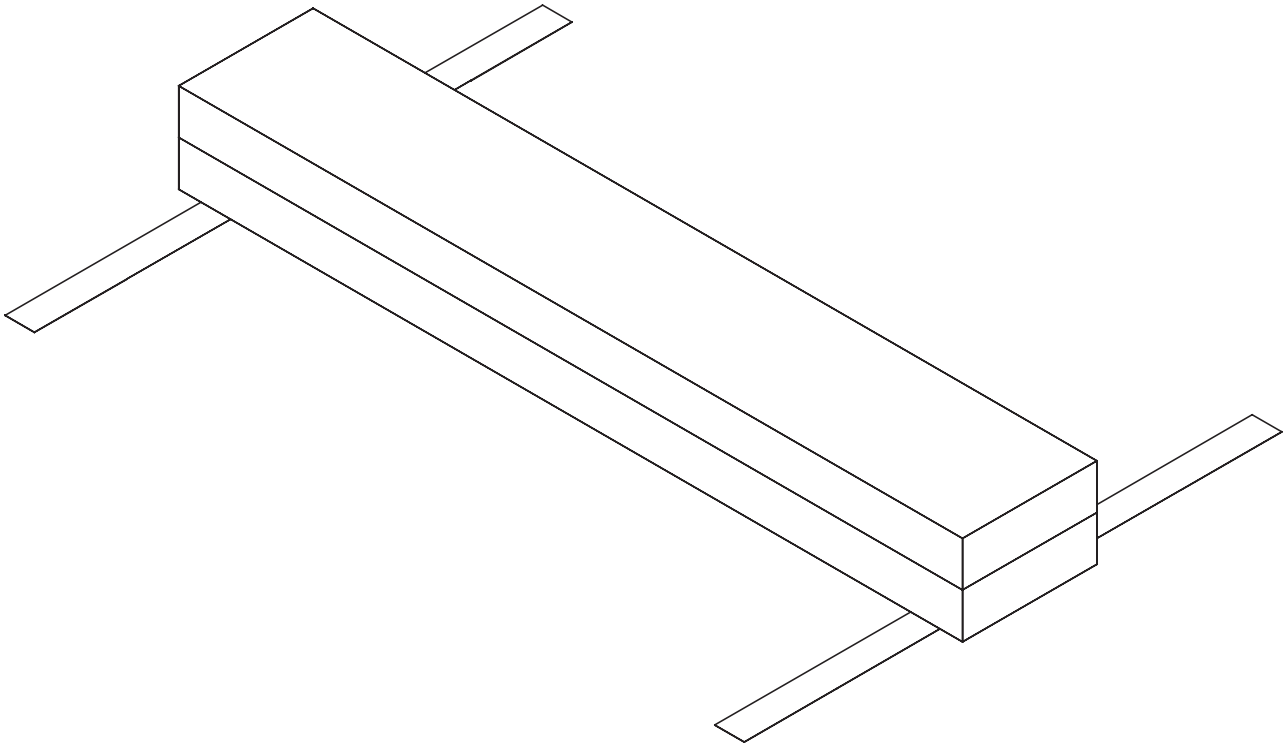

Return To Table of Contents

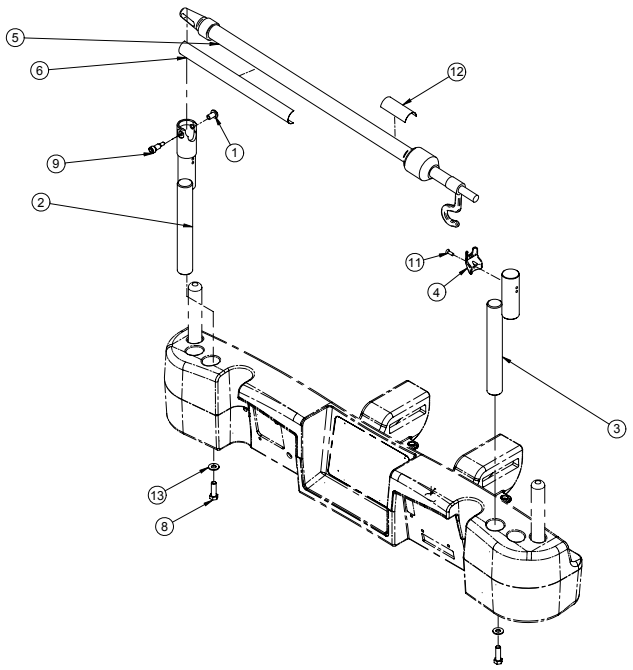

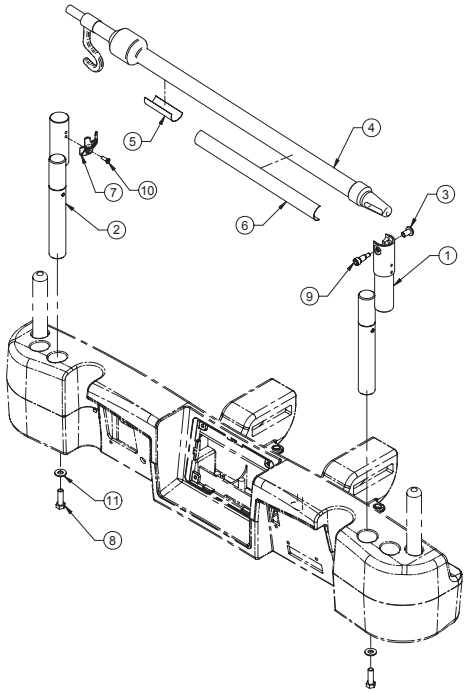

FA64221

1	QDF2121	1
2	QDF64-1362	1
3	QDB64-1365	1
4	QP64-1225-10	1
5	QDF5073	1
6	QE71-1246-T	1
8	VB15A1032-S	2
9	VD60A1N1016-S	1
11	VV81A9E16-10	1
12	QE14399-T	1
13	VW10A10	2

FA64238

1	QDF64-1366	1
2	QDF64-1367	1
3	QDF2121	1
4	QDF5073	1
5	QE14399-T	1
6	QE71-0246-T	1
7	QP64-1225	1
8	VB15A1O32-S	2
9	VD60A1N1016-S	1
10	VV81A9E16-10	1
11	VW10A10	2

Return To Table of Contents

FA64202

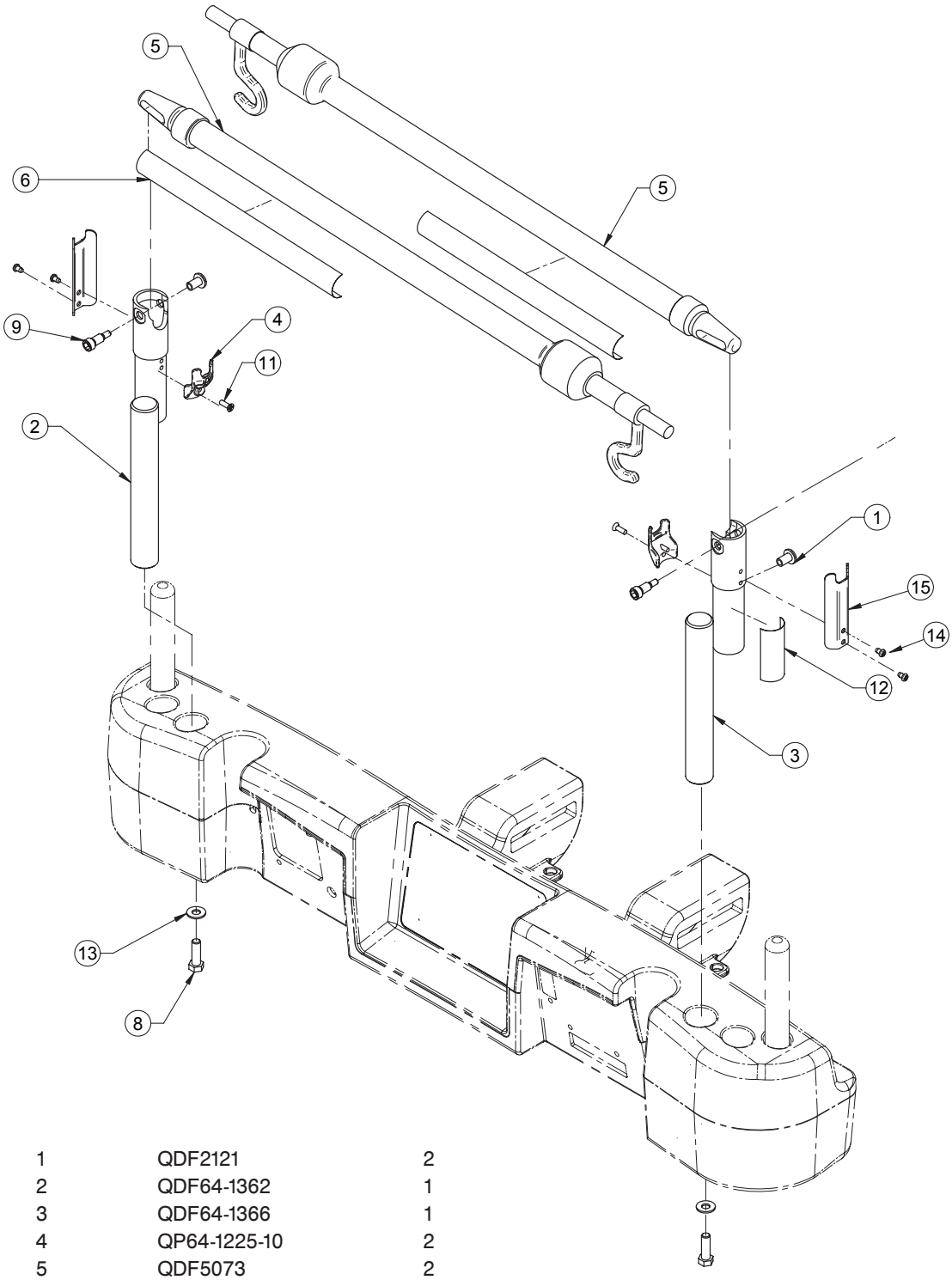

1	QDF2121	2
2	QDF64-1362	1
3	QDF64-1366	1
4	QP64-1225-10	2
5	QDF5073	2
6	QE71-0246-T	2
8	VB15A1O32-S	2
9	VD60A1N1016-S	2
11	VV81A9E16-10	2
12	QE14399-T	1
13	VW10A10	2
14	VV33A1G08-S	4
15	64-1269C	2

Return To Table of Contents

FA64210

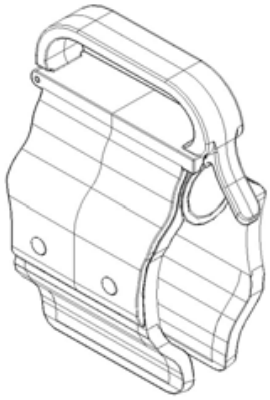

FA64214

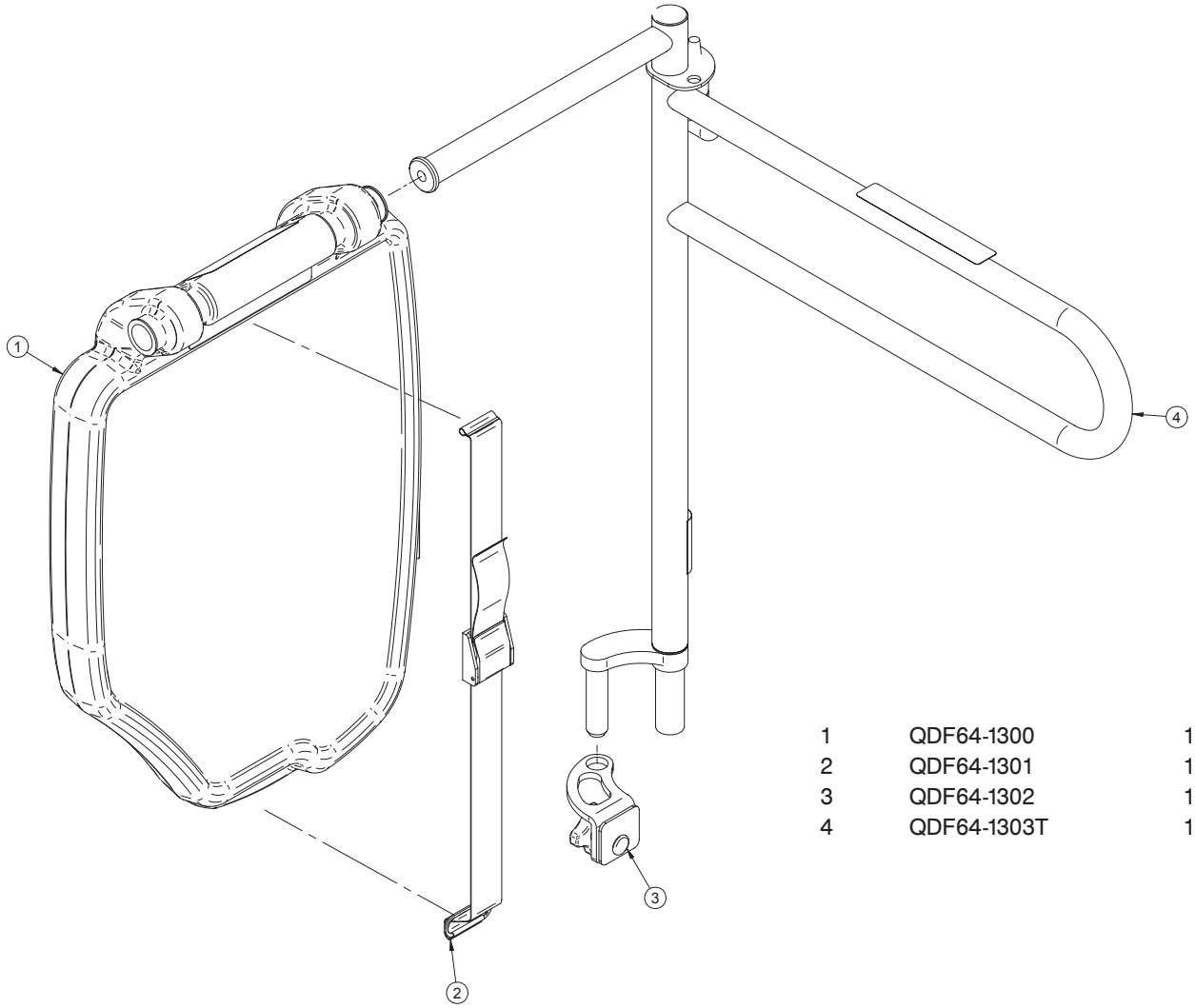

1	QDF64-1300	1
2	QDF64-1301	1
3	QDF64-1302	1
4	QDF64-1303T	1

Return To Table of Contents

FA64187

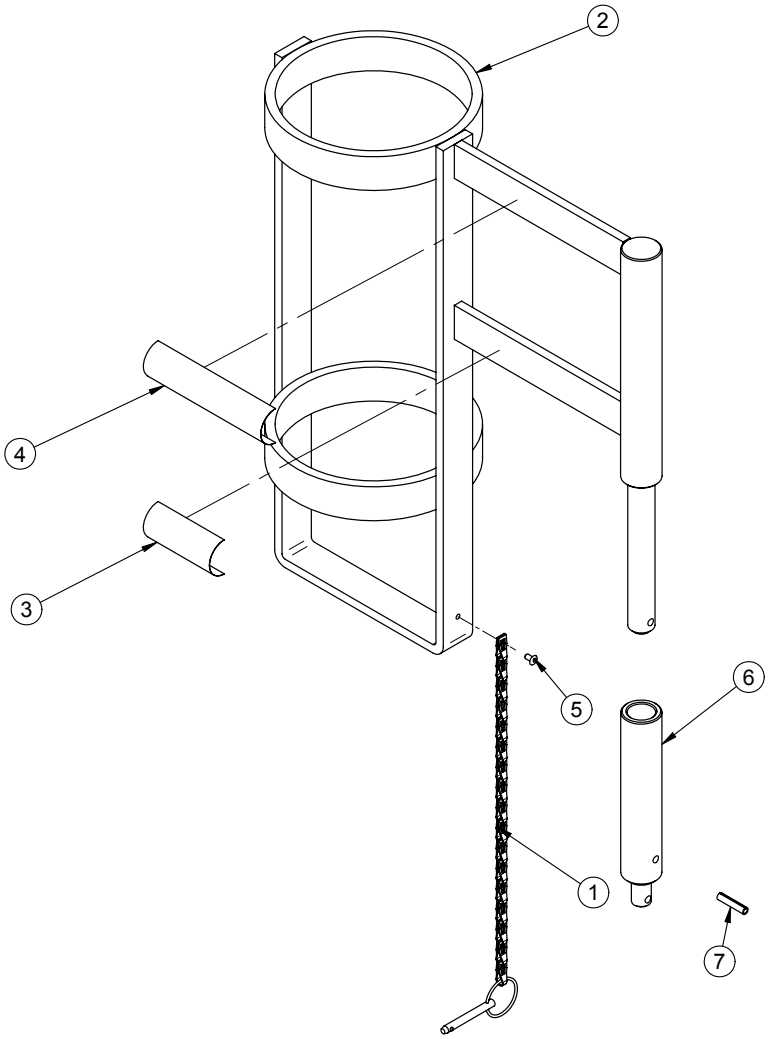

1	64-0647	1
2	QDF64-1059	1
3	QE14399-T	1
4	QE71-0601	1
5	VR11H42	1
6	QDF64-1285	1
7	VG10B0628	1

Return To Table of Contents

FA64203

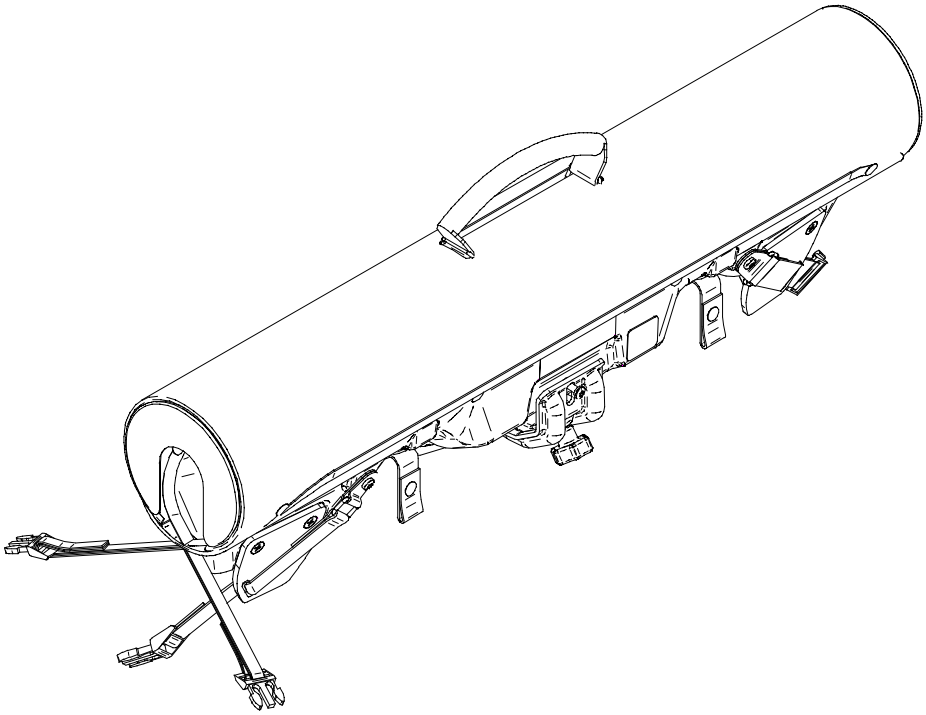

FA64209

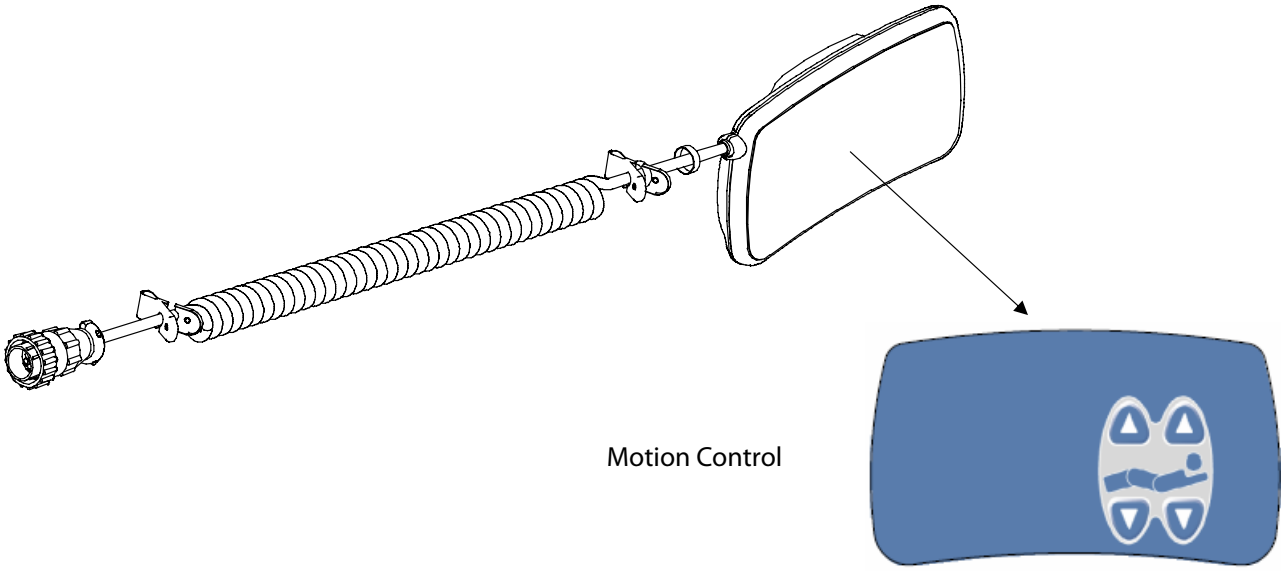

Return To Table of Contents

FA64226

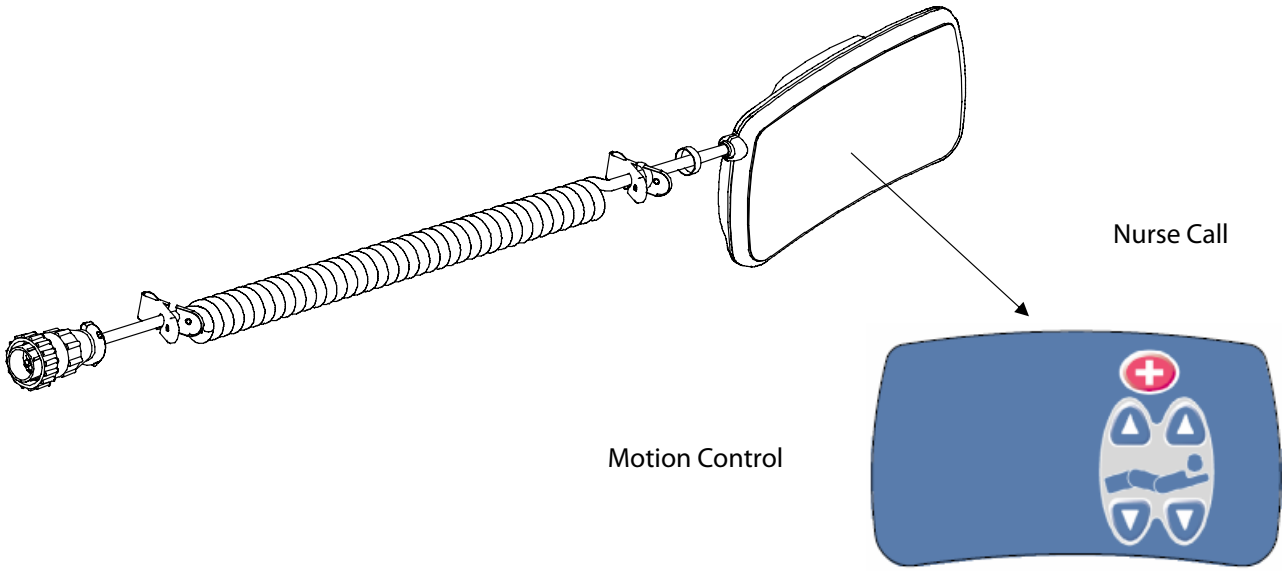

FA64195

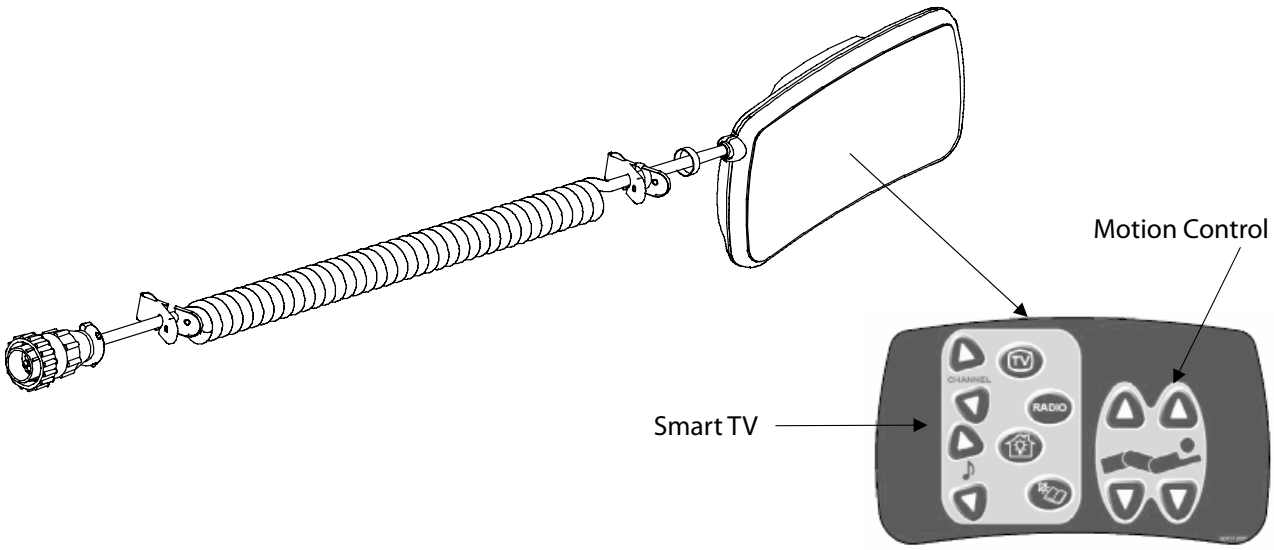

Return To Table of Contents

FA64225

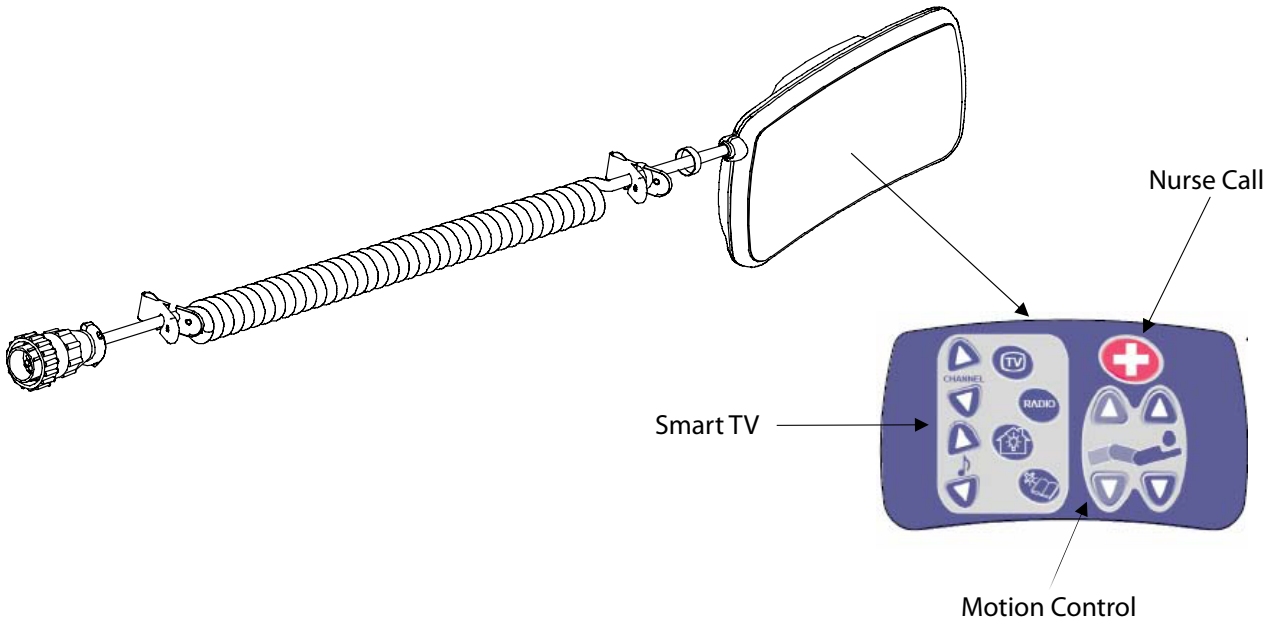

FA64186

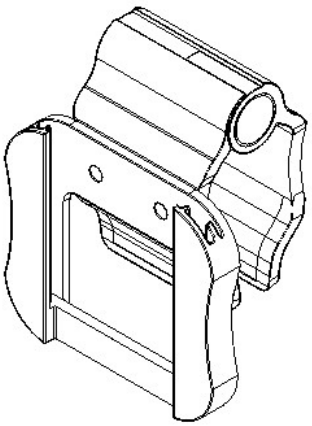

Return To Table of Contents

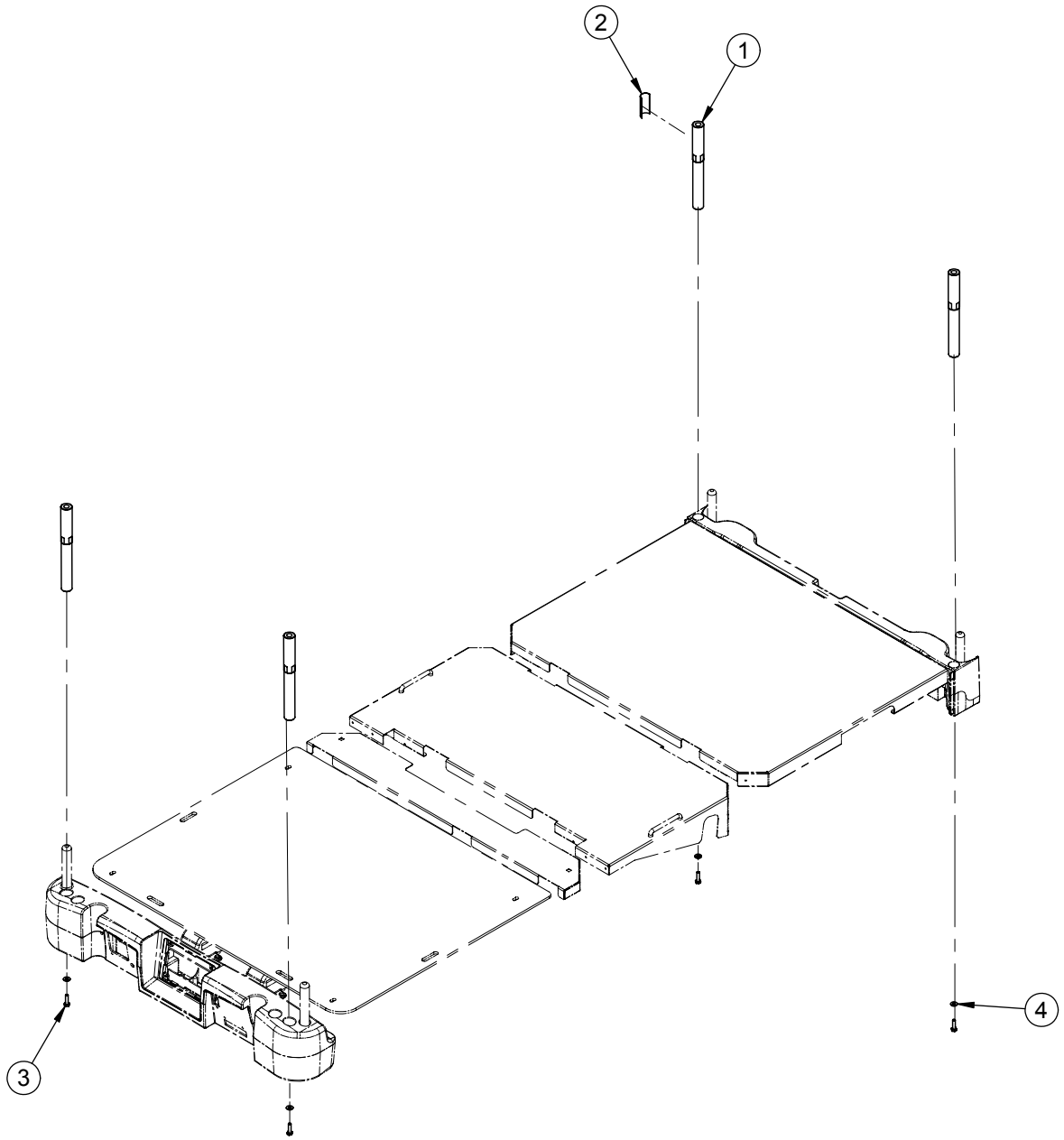

1	64-1262C	4
2	QE14399-T	1
3	VB15A1N32-S	4
4	VW10A08	4

Return To Table of Contents

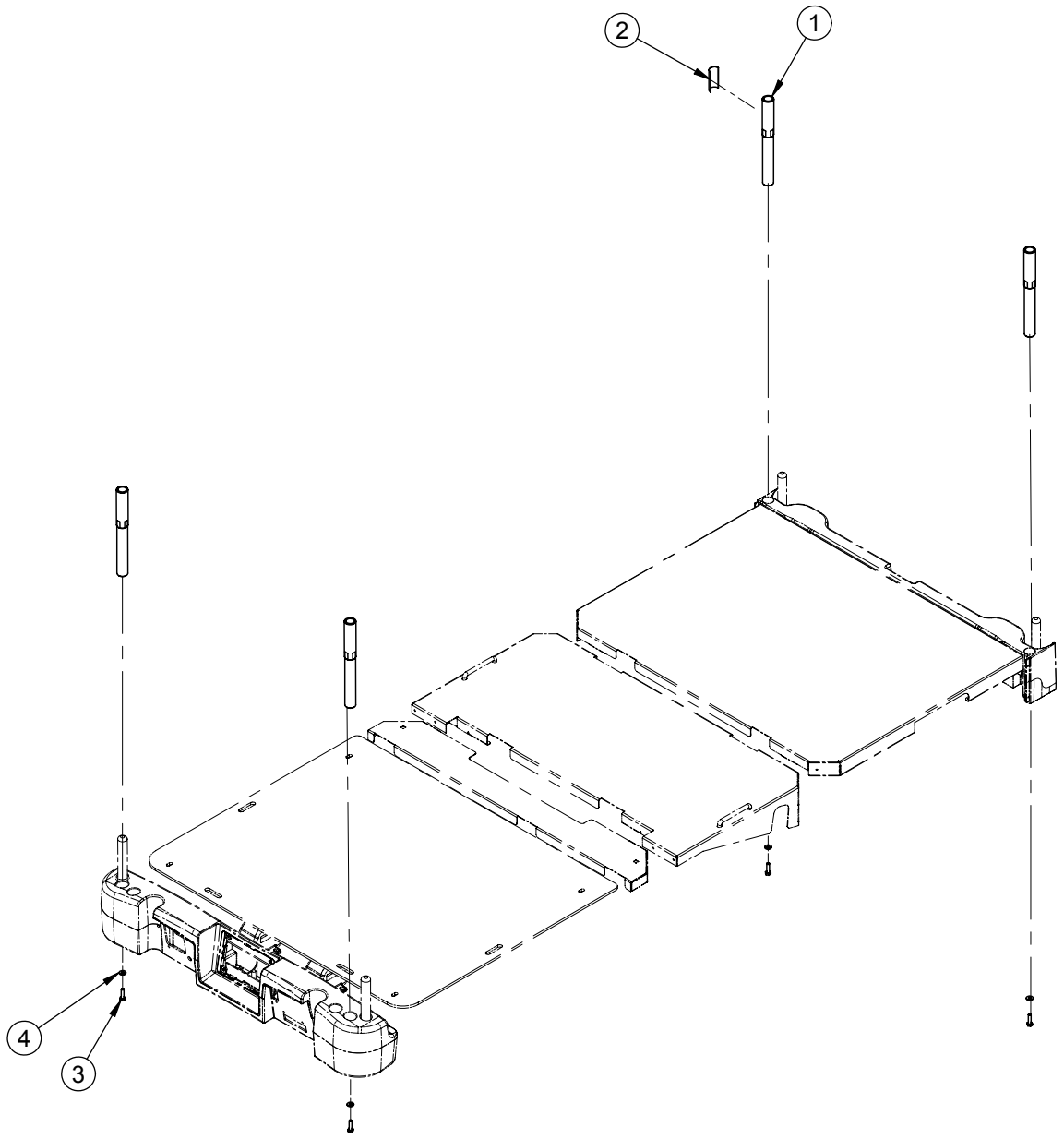

1	64-1263C	4
2	QE14399-T	1
3	VB15A1N32-S	4
4	VW10A08	4

Return To Table of Contents

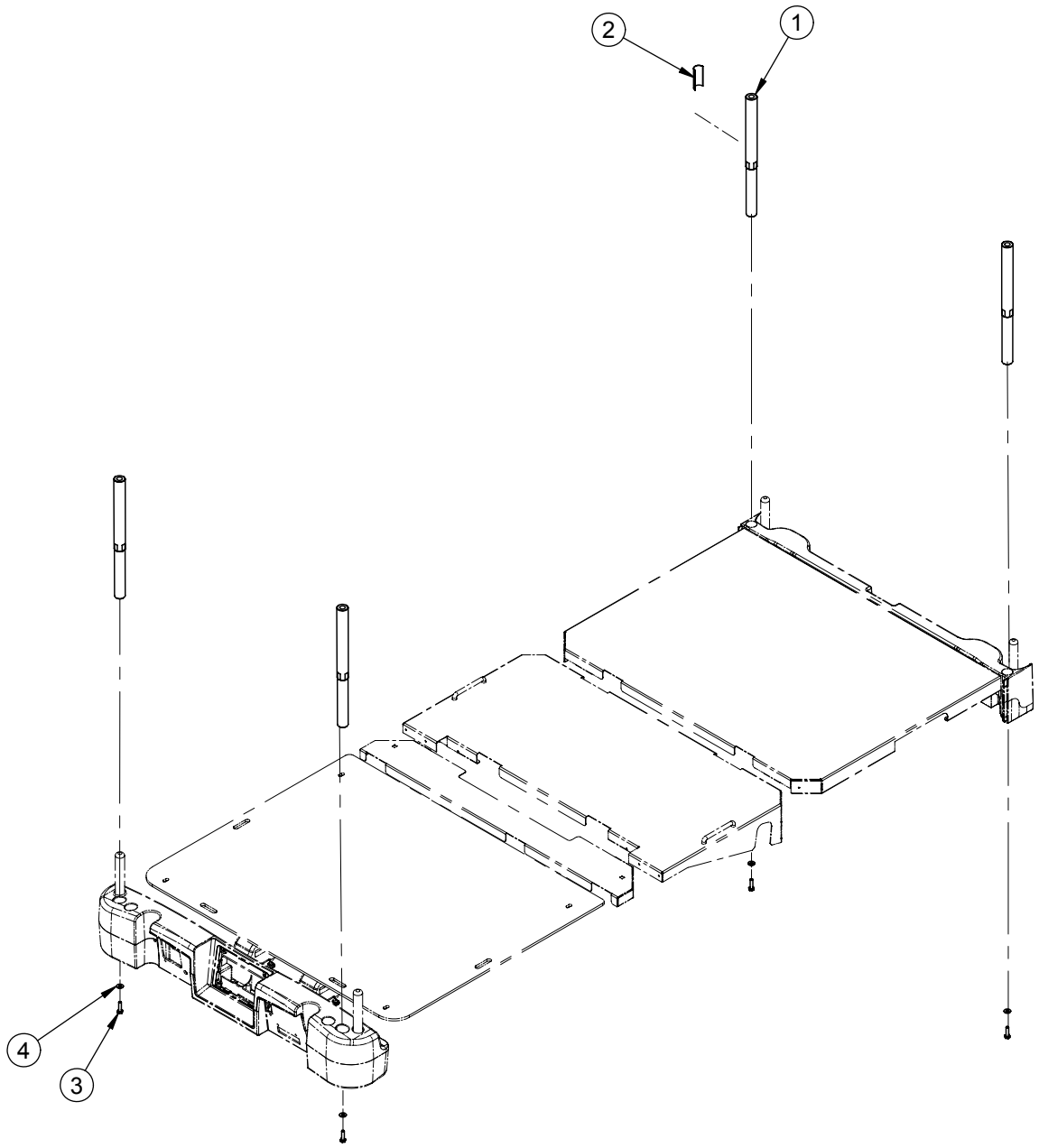

1	64-1264C	4
2	QE14399-T	1
3	VB15A1N32-S	4
4	VW10A08	4

Return To Table of Contents

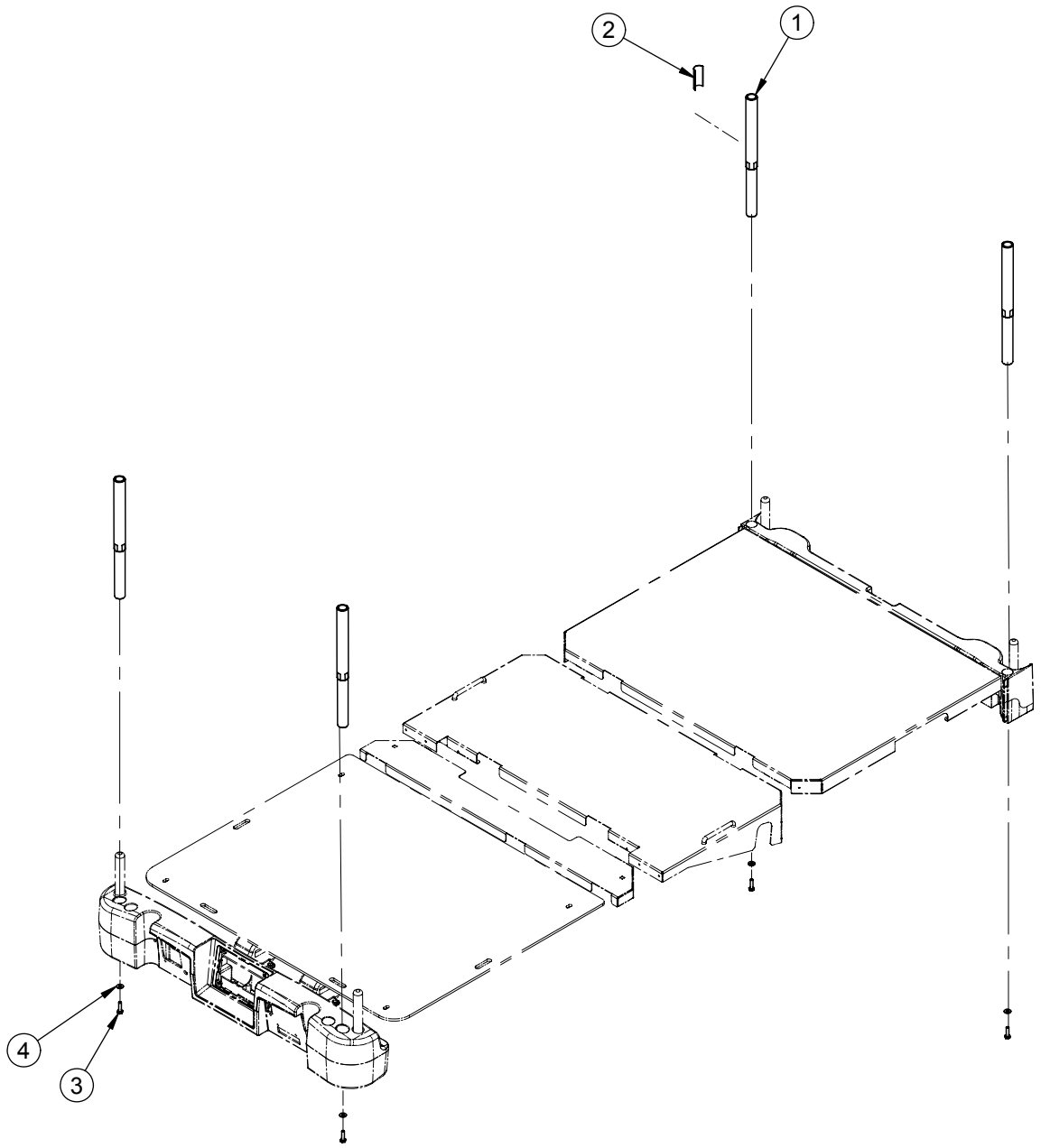

1	64-1265C	4
2	QE14399-T	1
3	VB15A1N32-S	4
4	VW10A08	4

Return To Table of Contents

FA64219

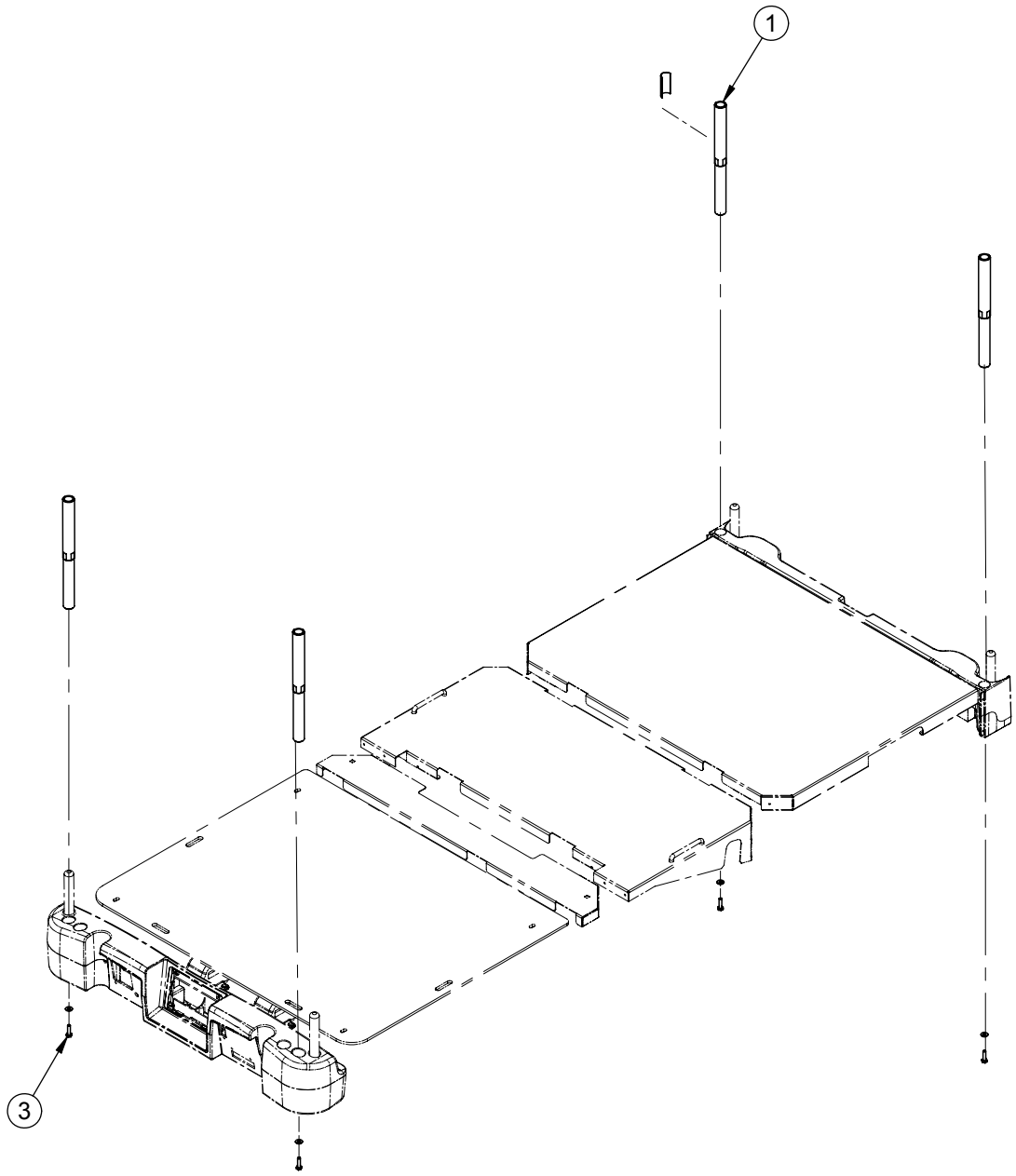

1	64-1266C	4
2	QE14399-T	1
3	VB15A1N32-S	4
4	VW10A08	4

Return To Table of Contents

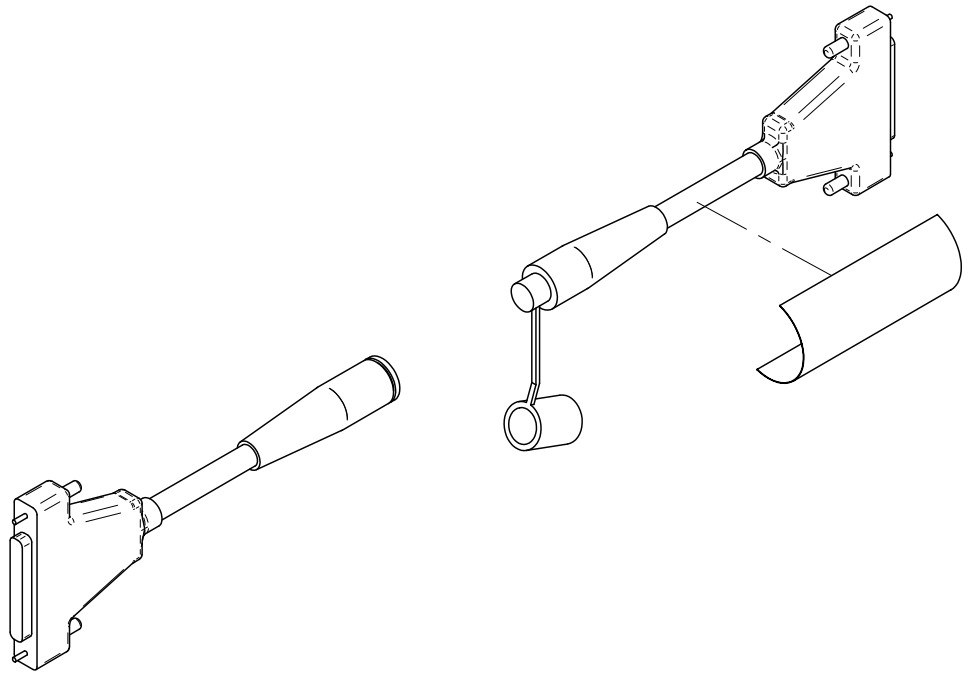

Return To Table of Contents

FA64205

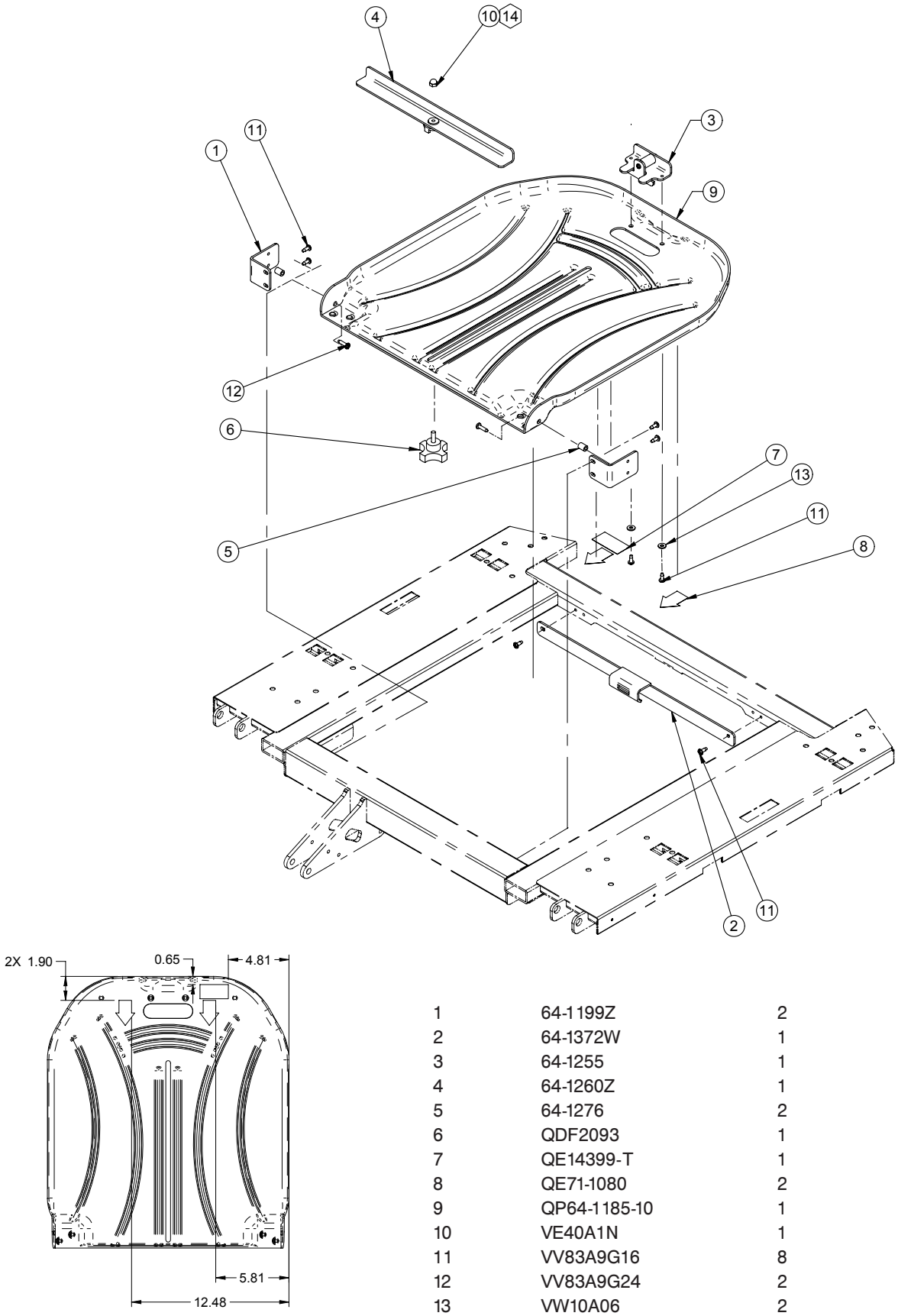

1	64-1199Z	2
2	64-1372W	1
3	64-1255	1
4	64-1260Z	1
5	64-1276	2
6	QDF2093	1
7	QE14399-T	1
8	QE71-1080	2
9	QP64-1185-10	1
10	VE40A1N	1
11	VV83A9G16	8
12	VV83A9G24	2
13	VW10A06	2
14*	M0008	-

Return To Table of Contents

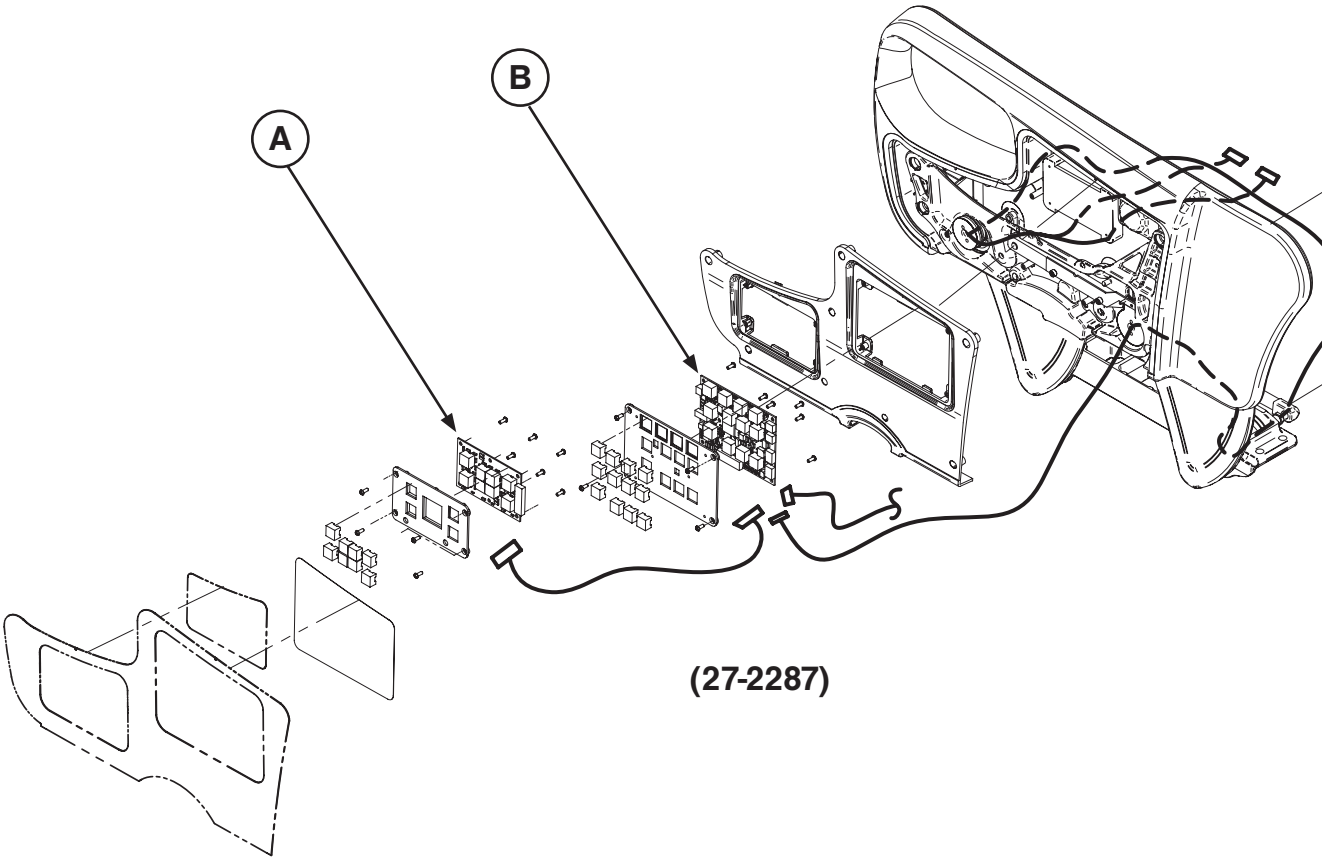

A	QDF27-1097	2
B	QDF27-1099	2

Return To Table of Contents

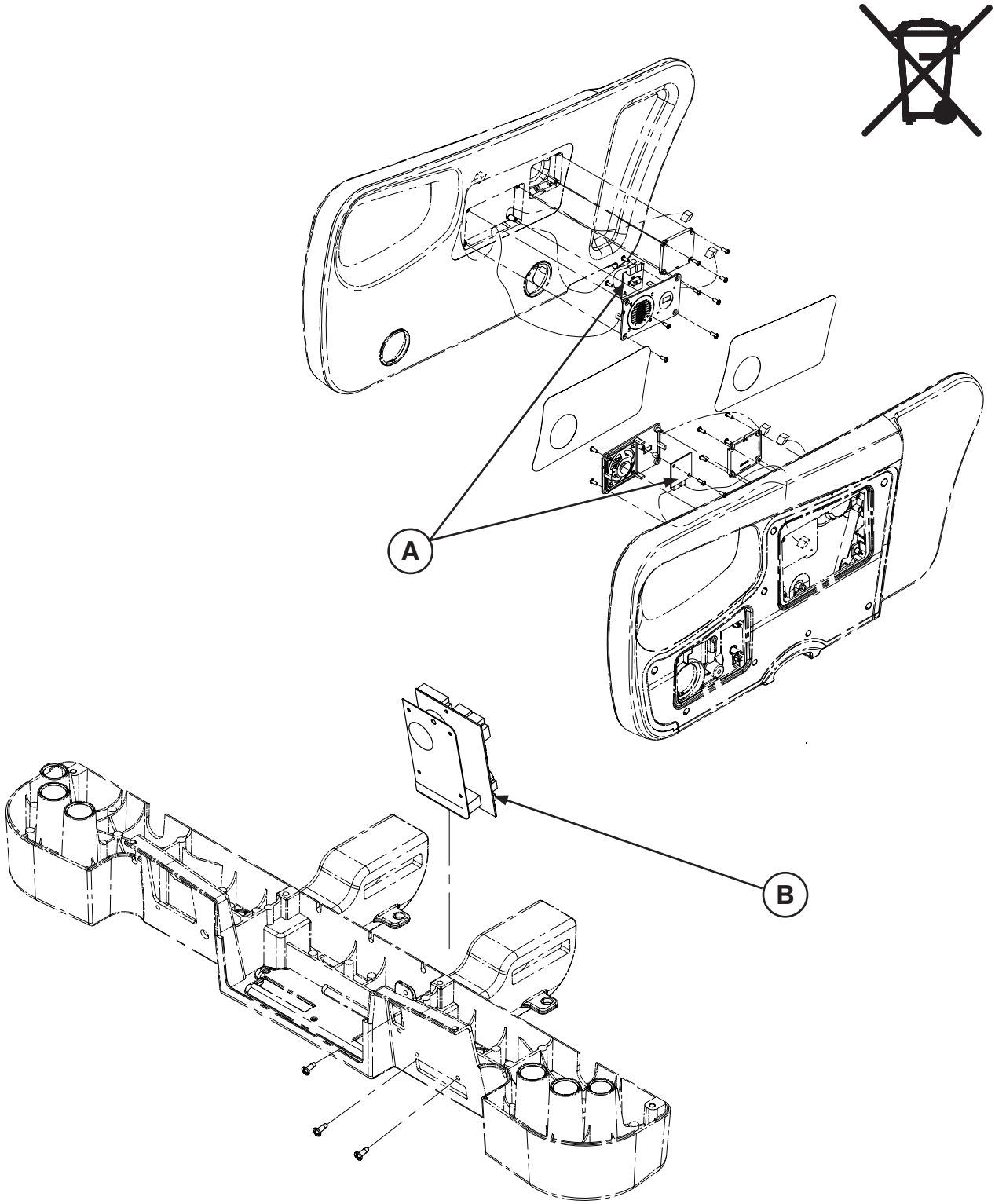

A	QDF27-1429	2
B	QDF75-0410	1

Return To Table of Contents

OL270032

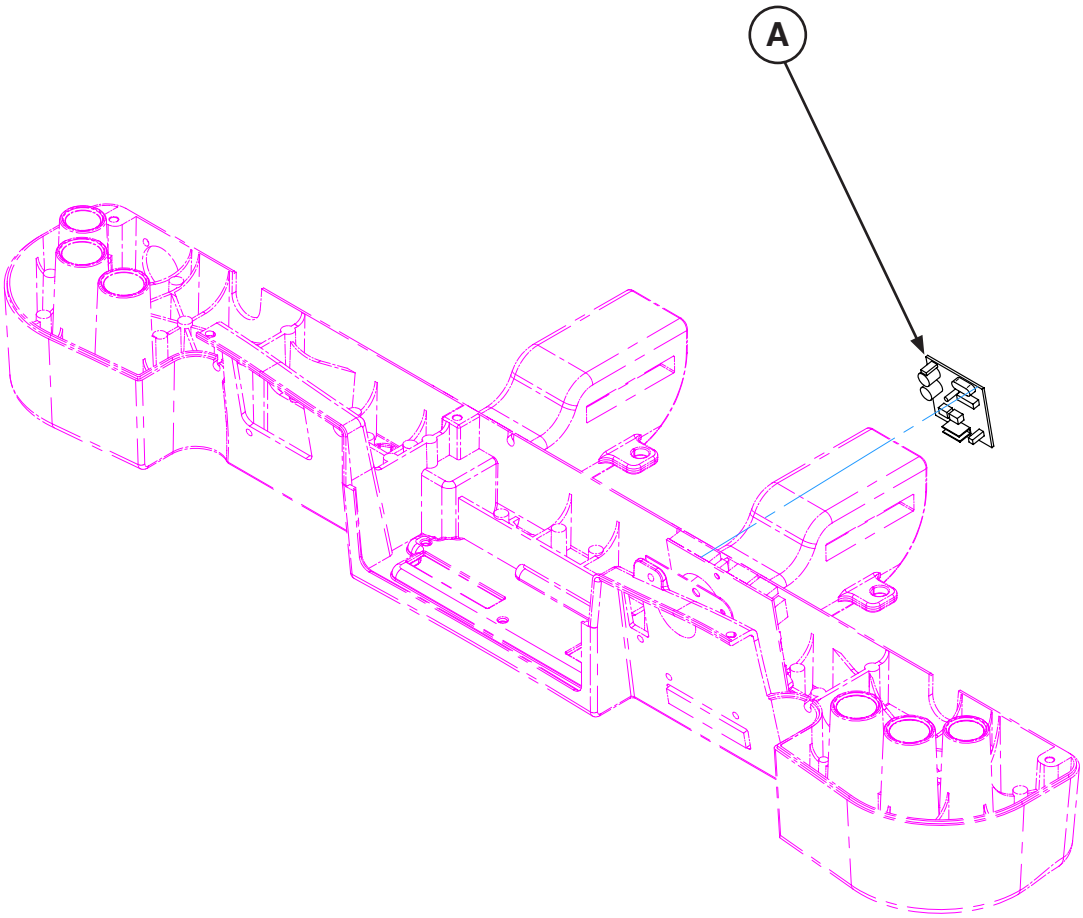

A	QDF2060	1

Return To Table of Contents

OL270060-XXX

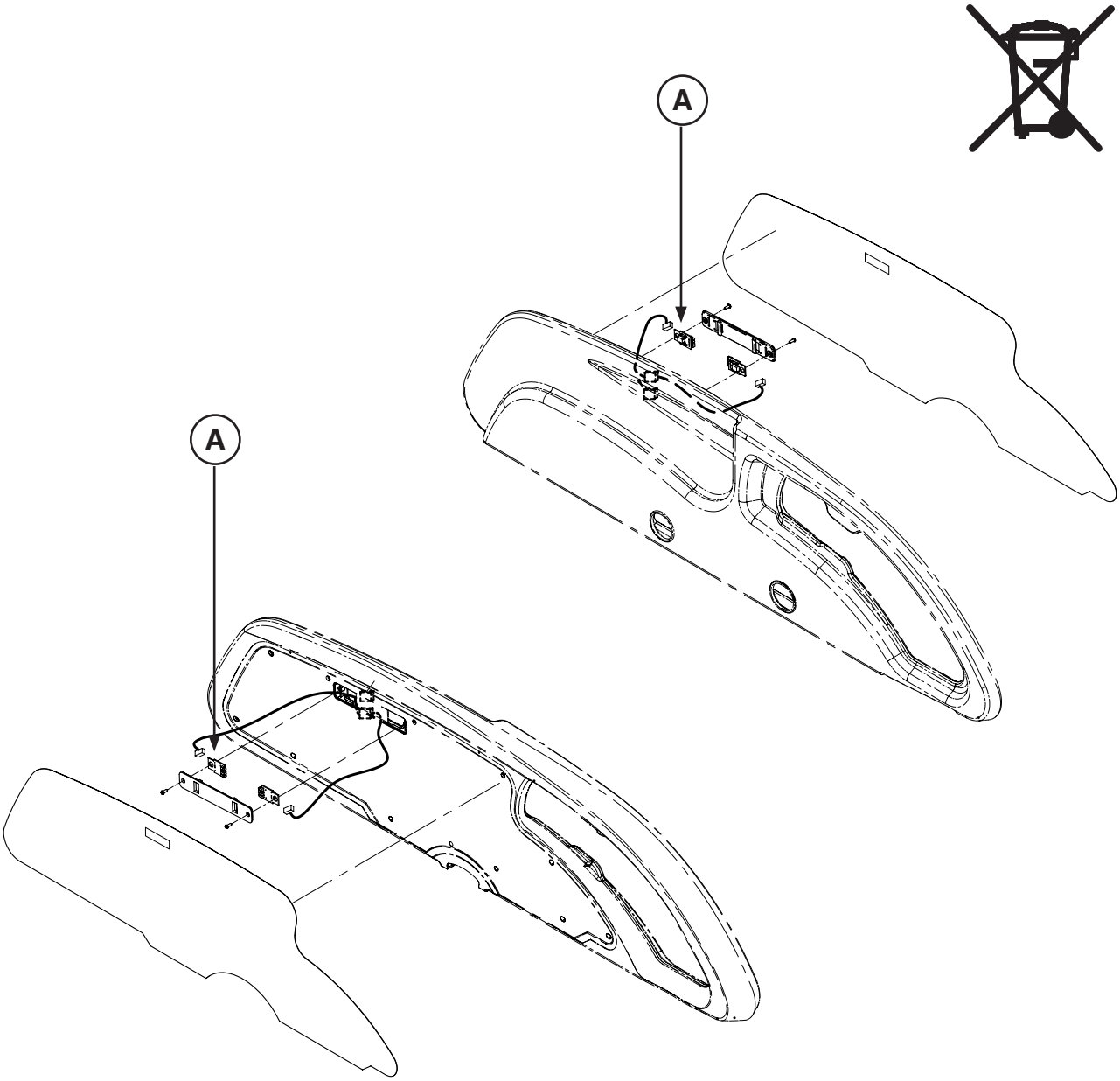

A	QDF27-1562	4

Return To Table of Contents

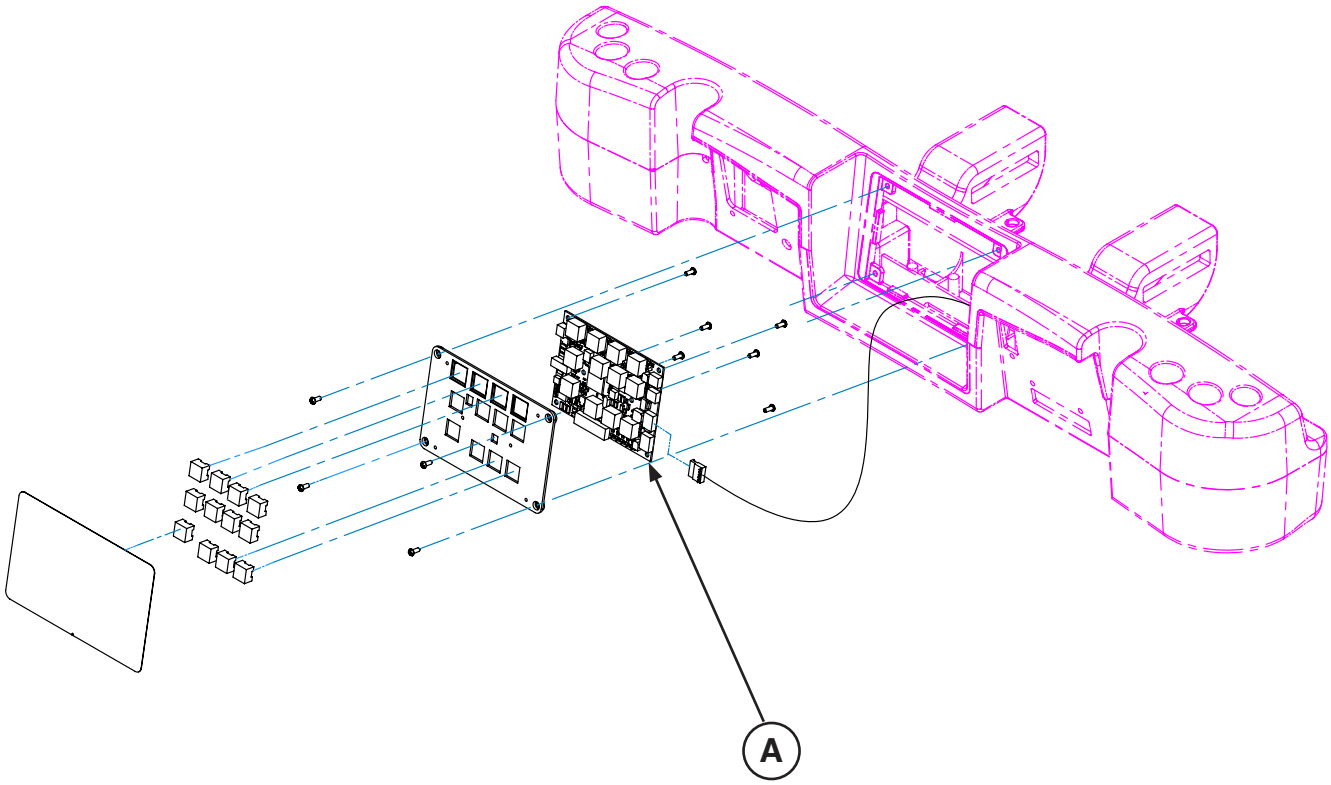

A	QDF27-1099	3

Return To Table of Contents

27-2456

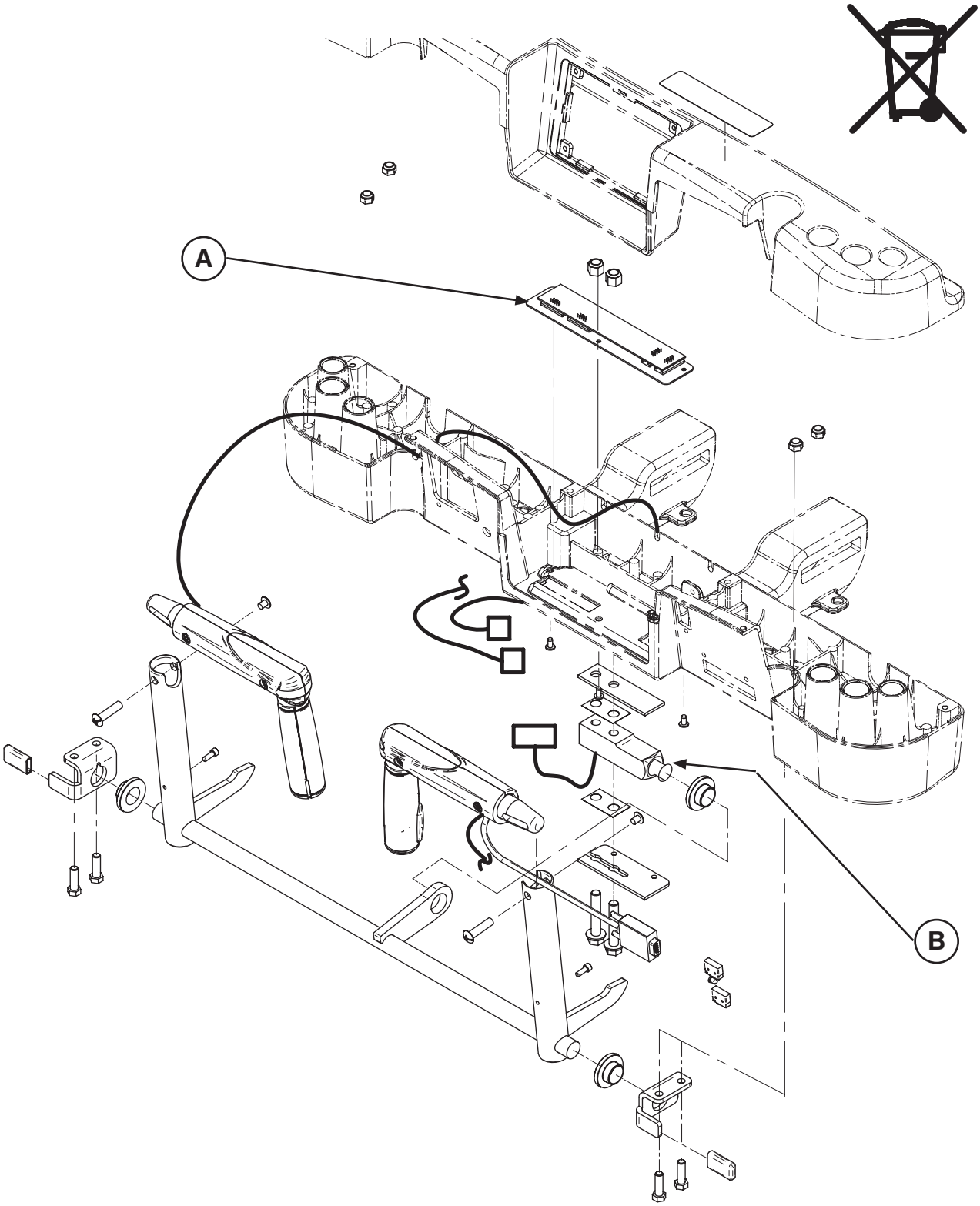

A	QDF75-0240	1
B	QDF9136	1

Return To Table of Contents

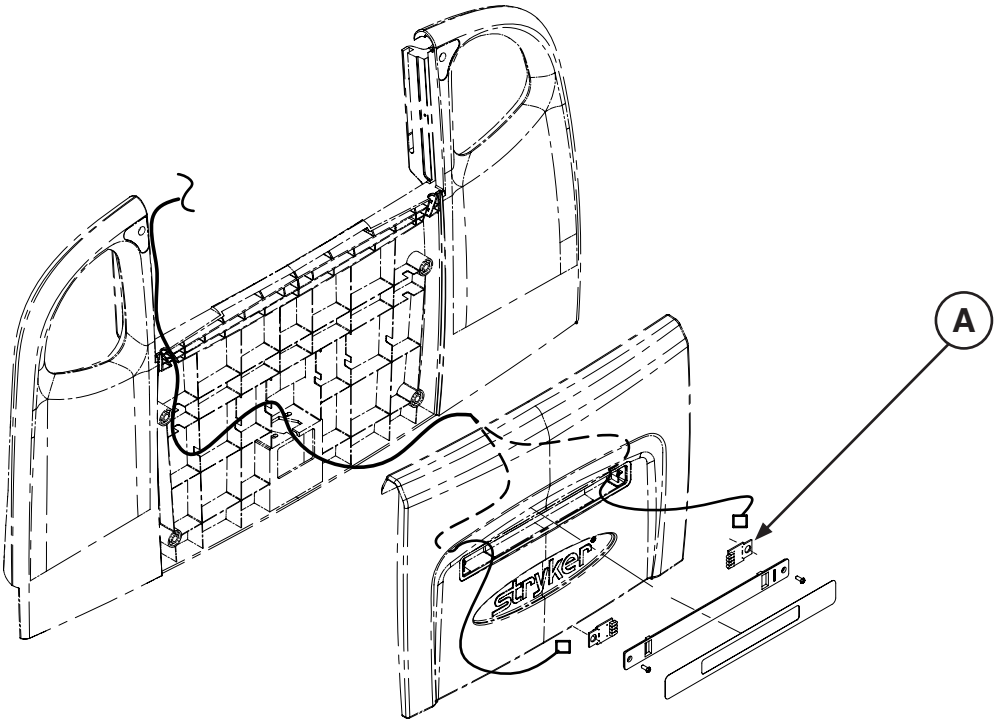

A	QDF27-1562	4

Return To Table of Contents

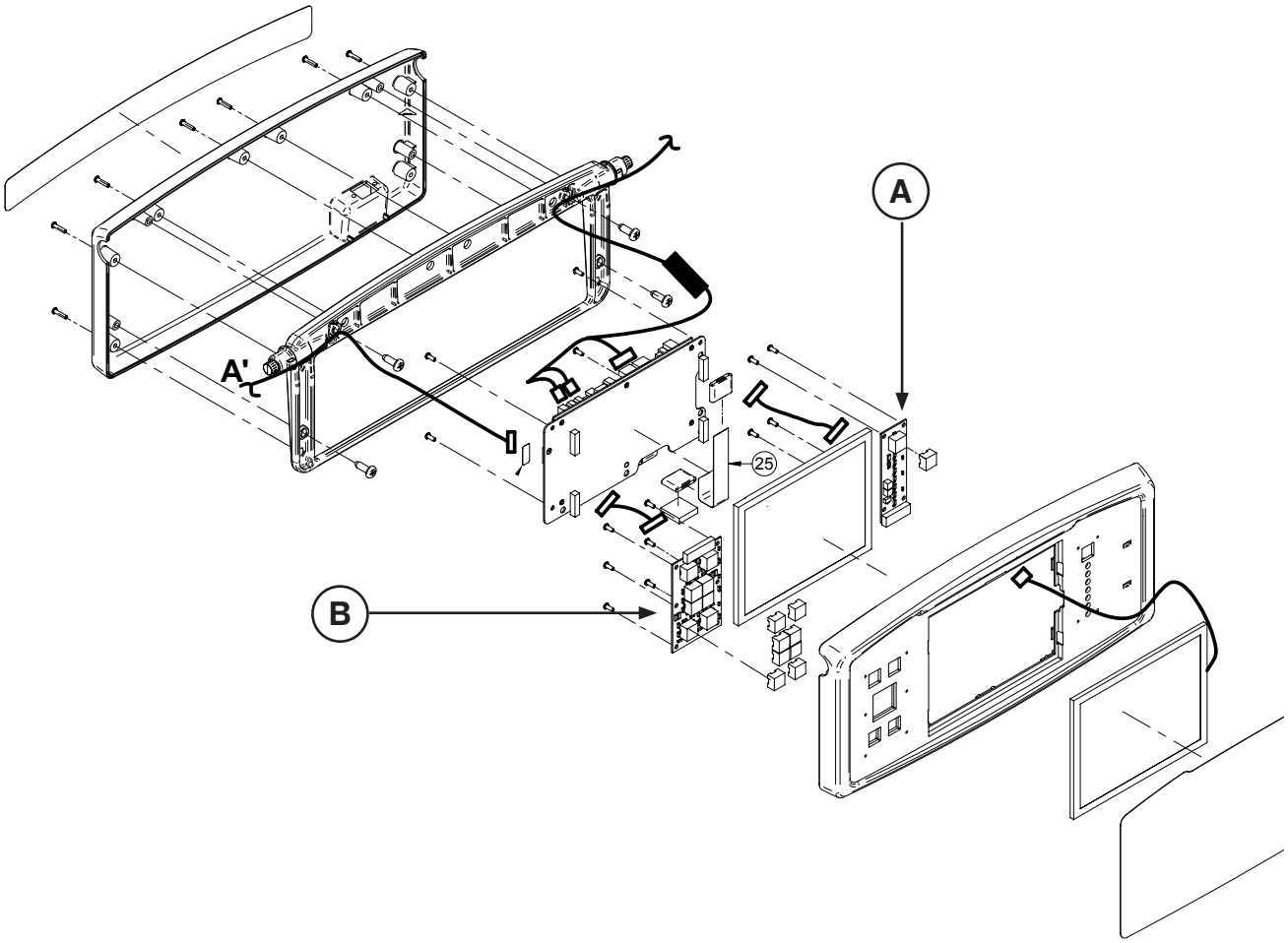

A	QDF75-0010	1
B	QDF27-1097	1

Return To Table of Contents

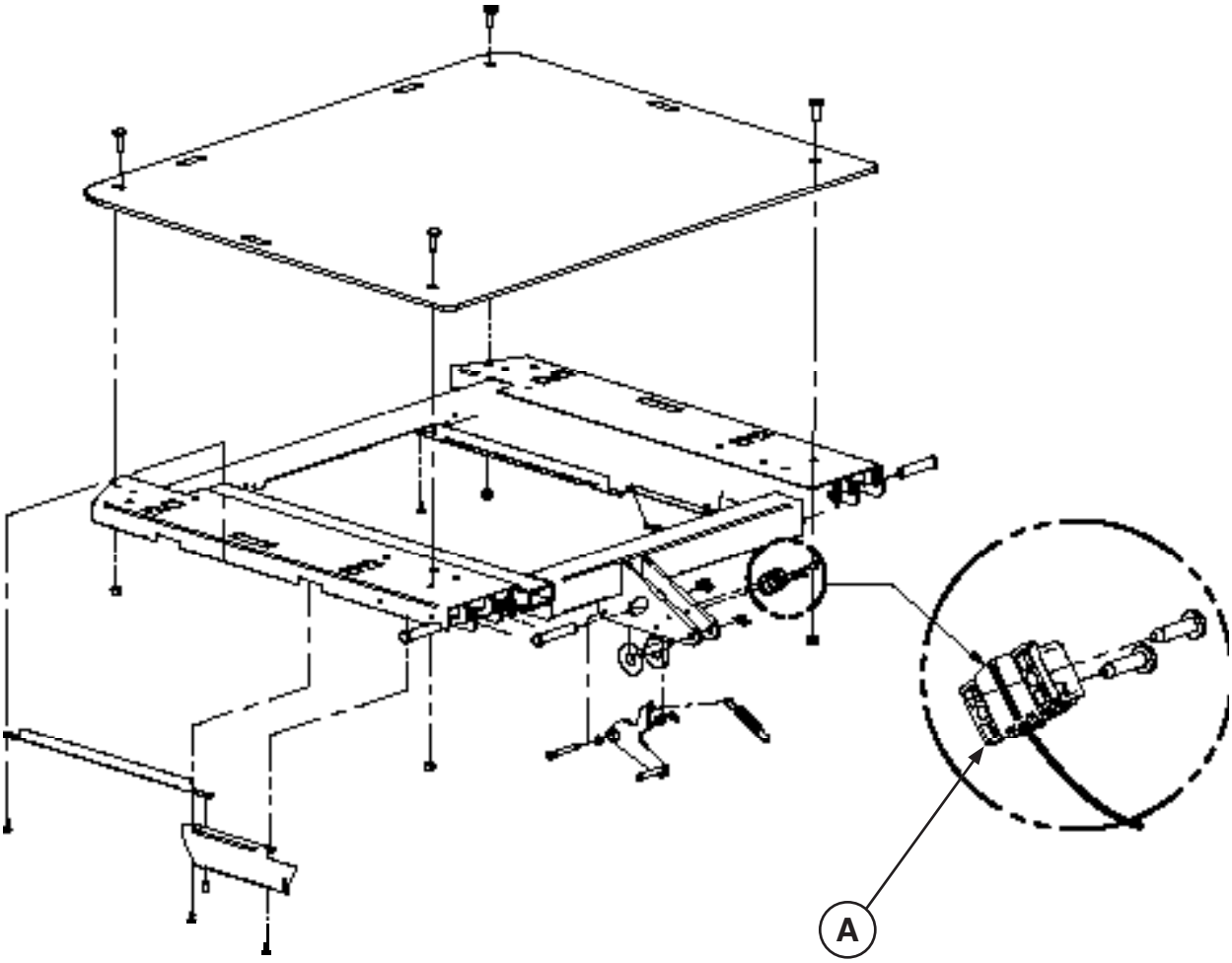

A	27-2477	1

Return To Table of Contents

L27-056

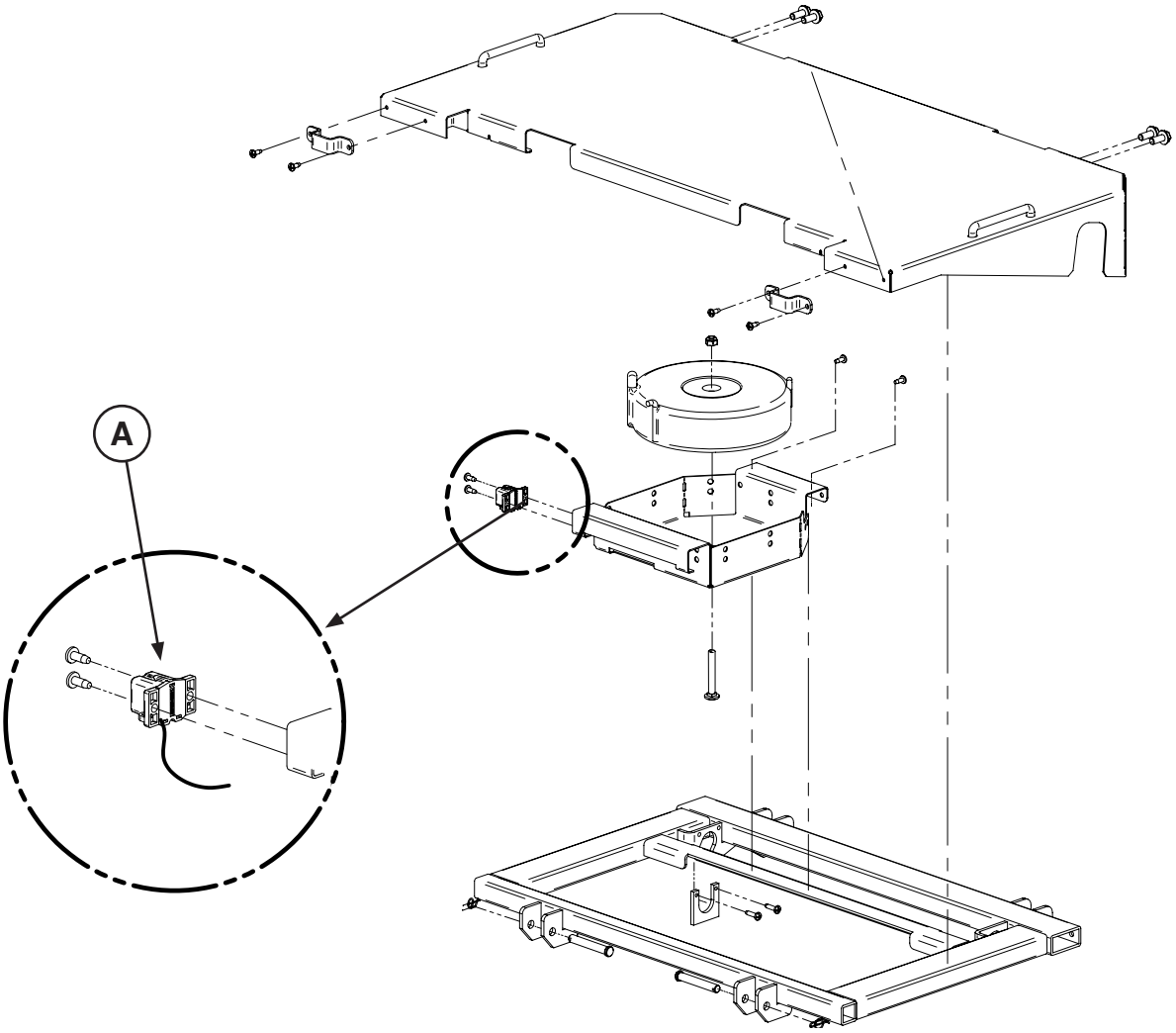

A	27-2477	1

Return To Table of Contents

27-2478

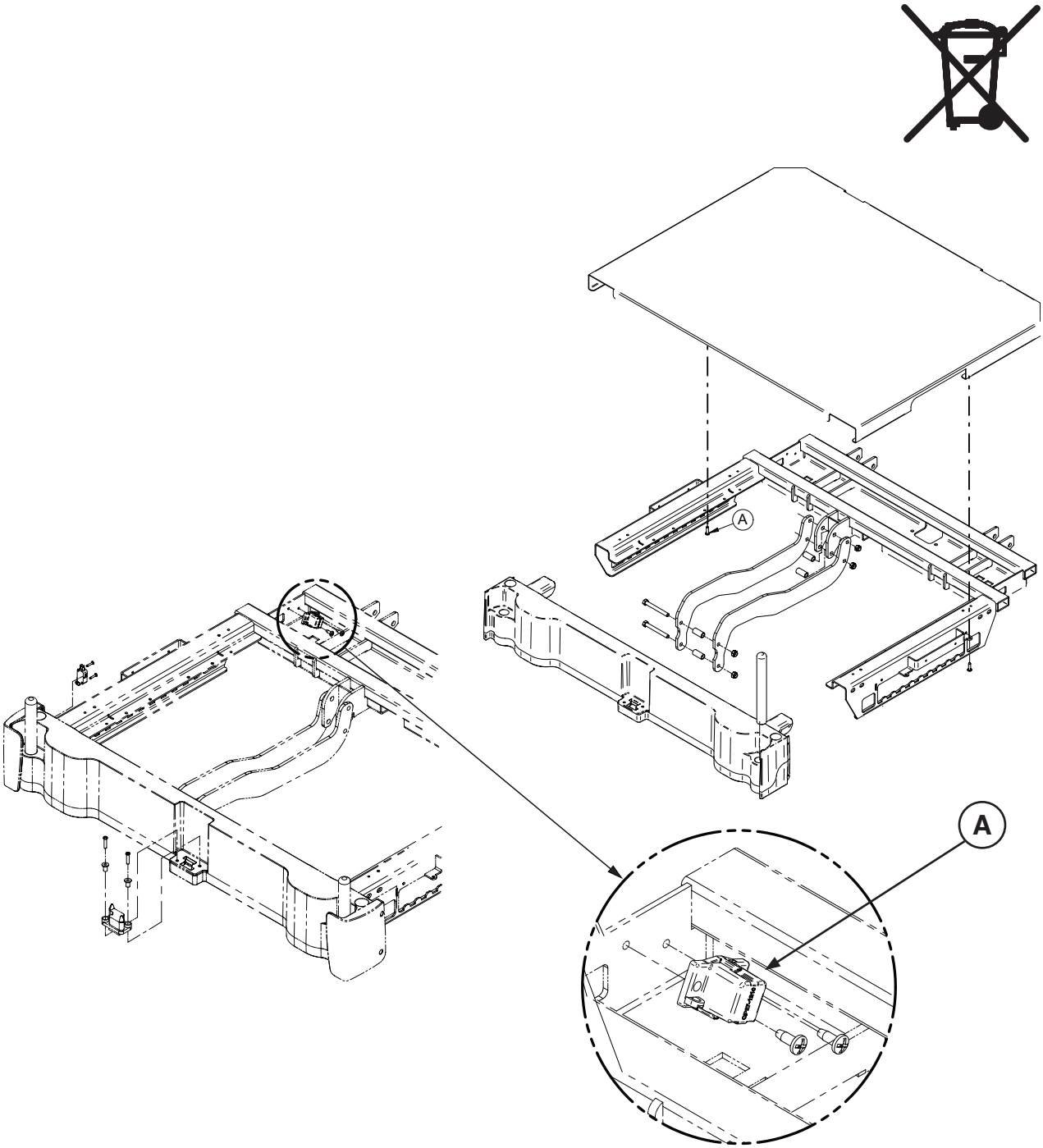

A	27-2477	1

Return To Table of Contents

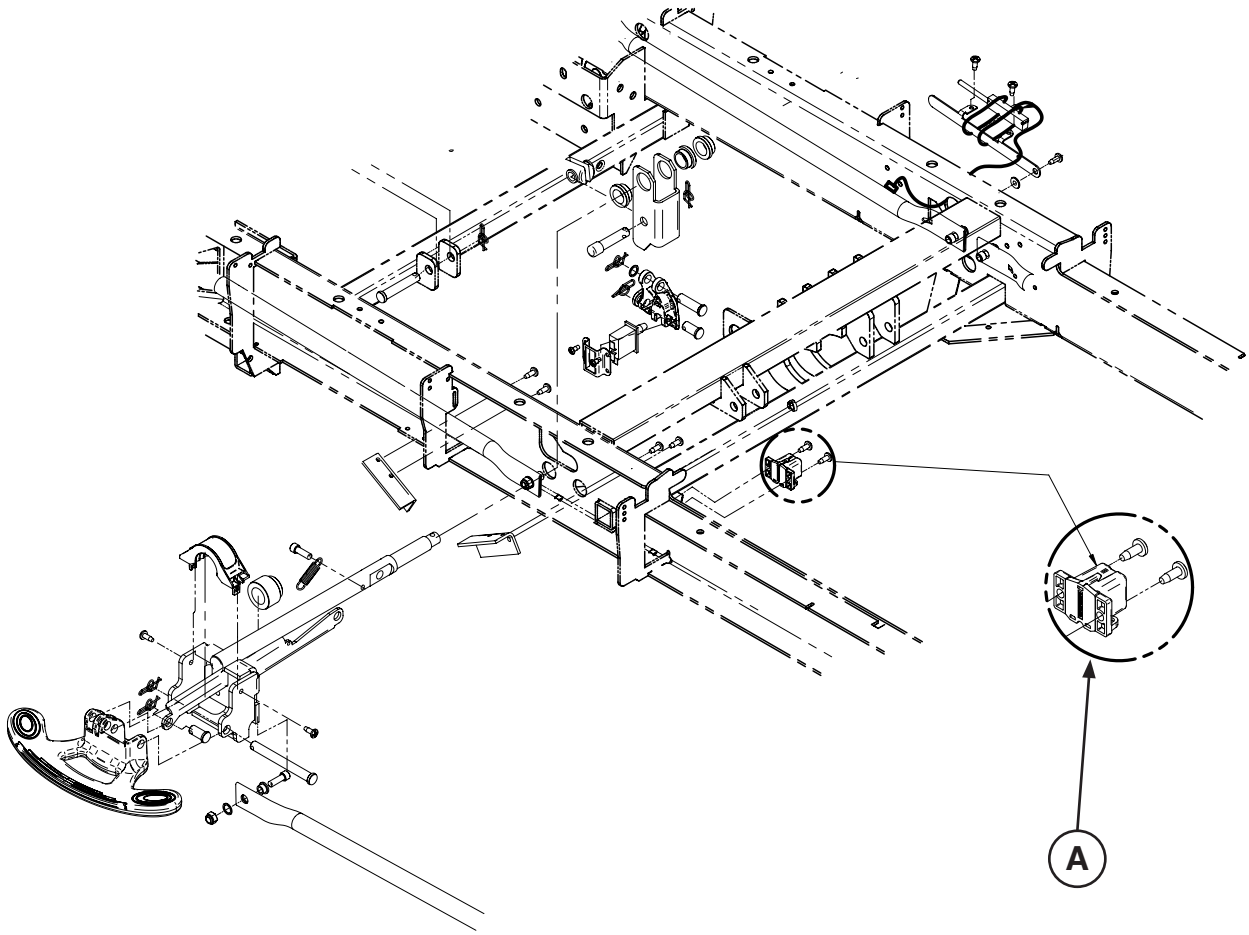

A	27-2477	1

Return To Table of Contents

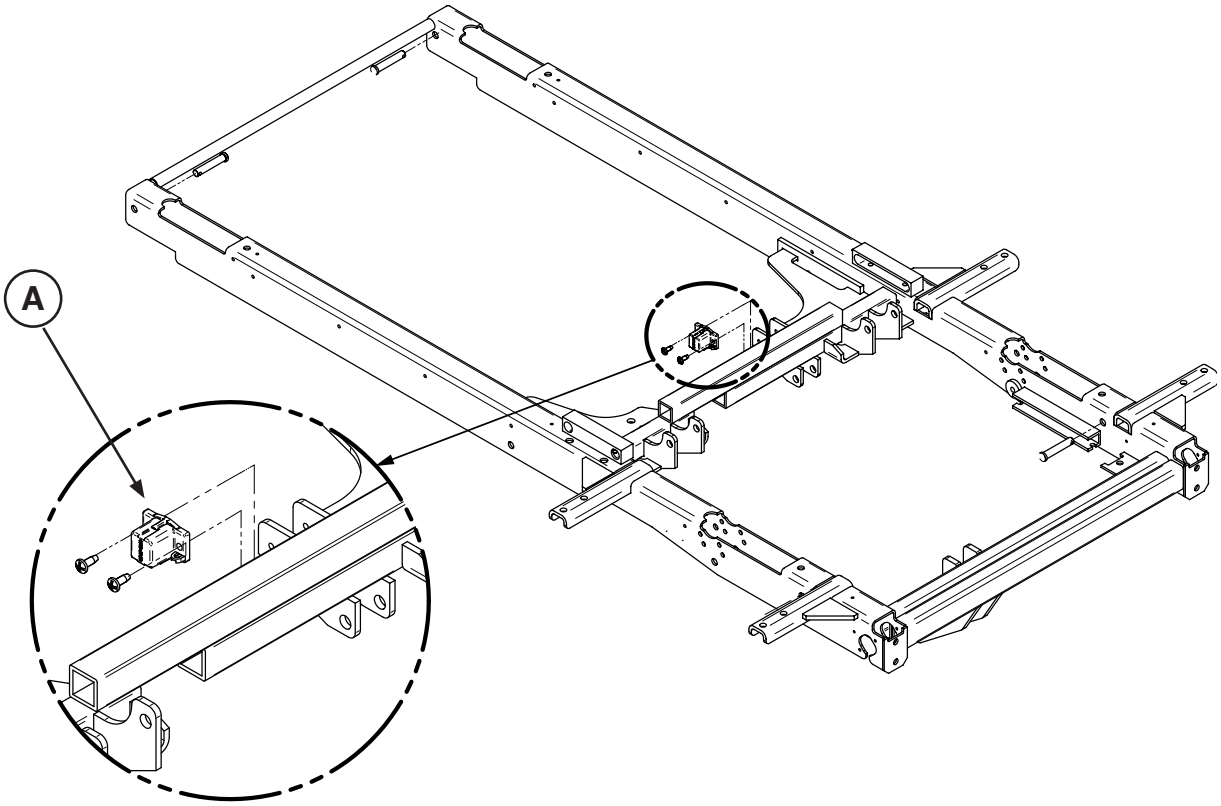

A	27-2477	1

Return To Table of Contents

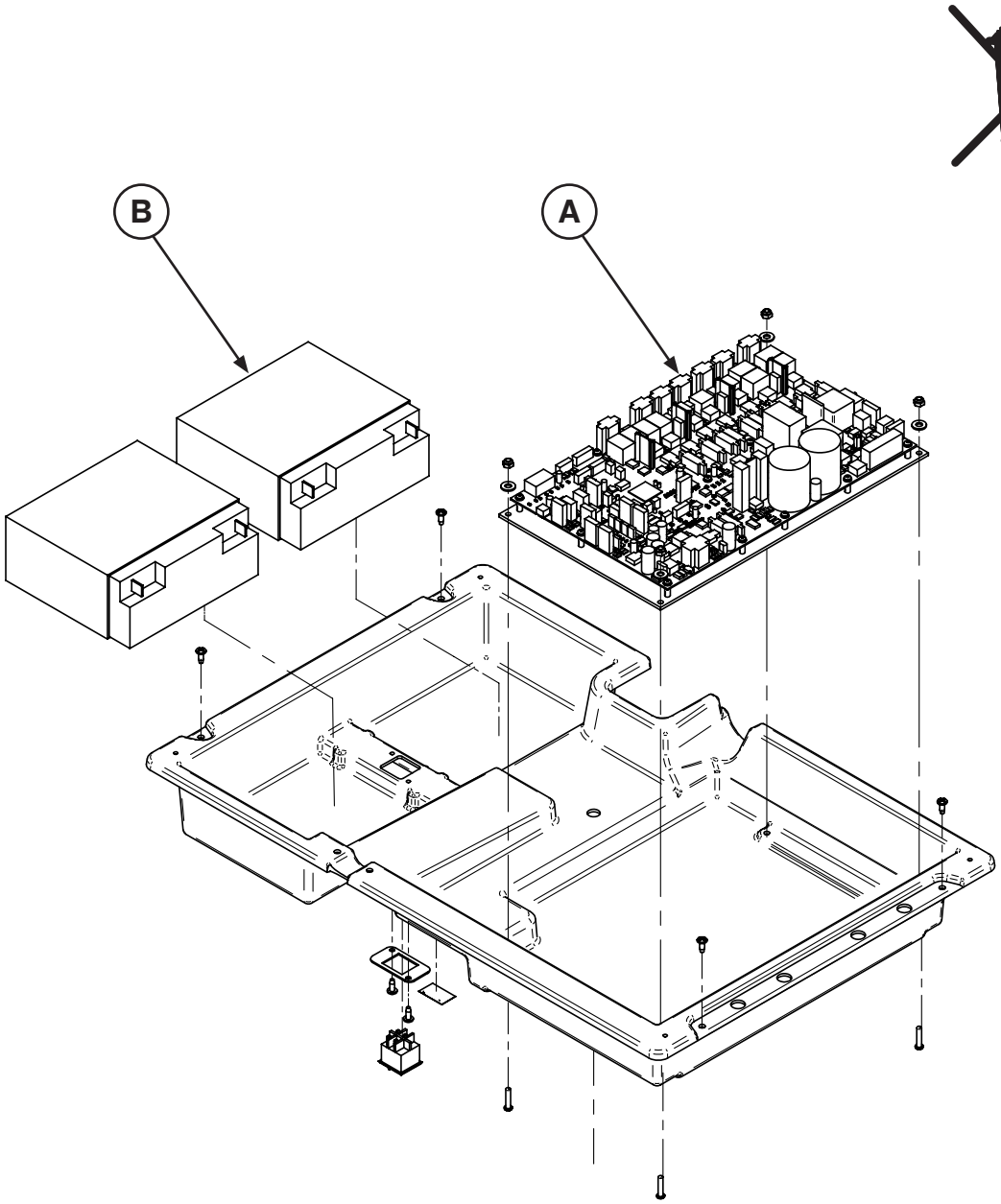

A	QDF75-0110	1
B	QDF9188	1

Return To Table of Contents

27-2546

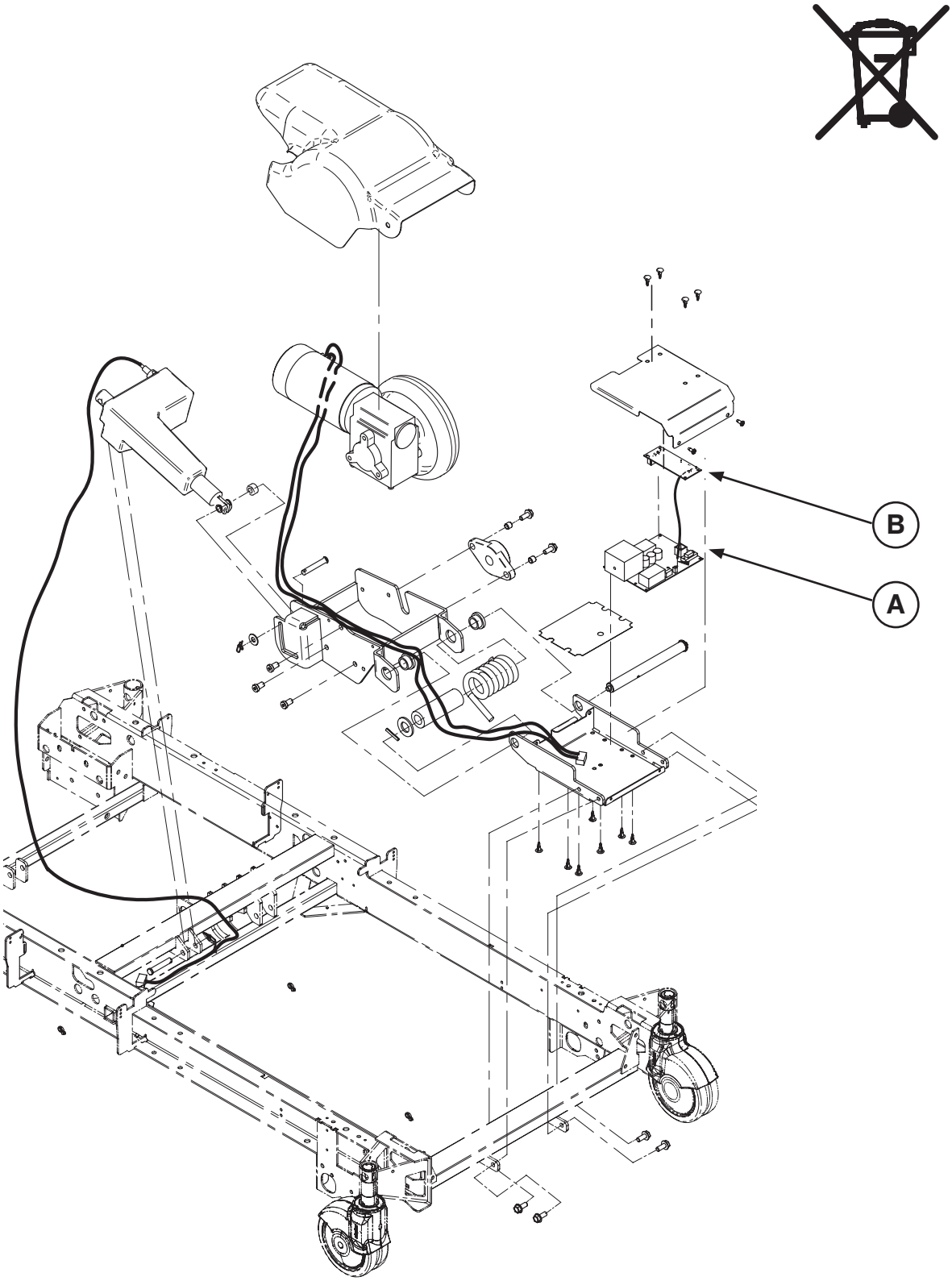

A	QDF27-1430	1
B	QDF75-0240	1

Return To Table of Contents

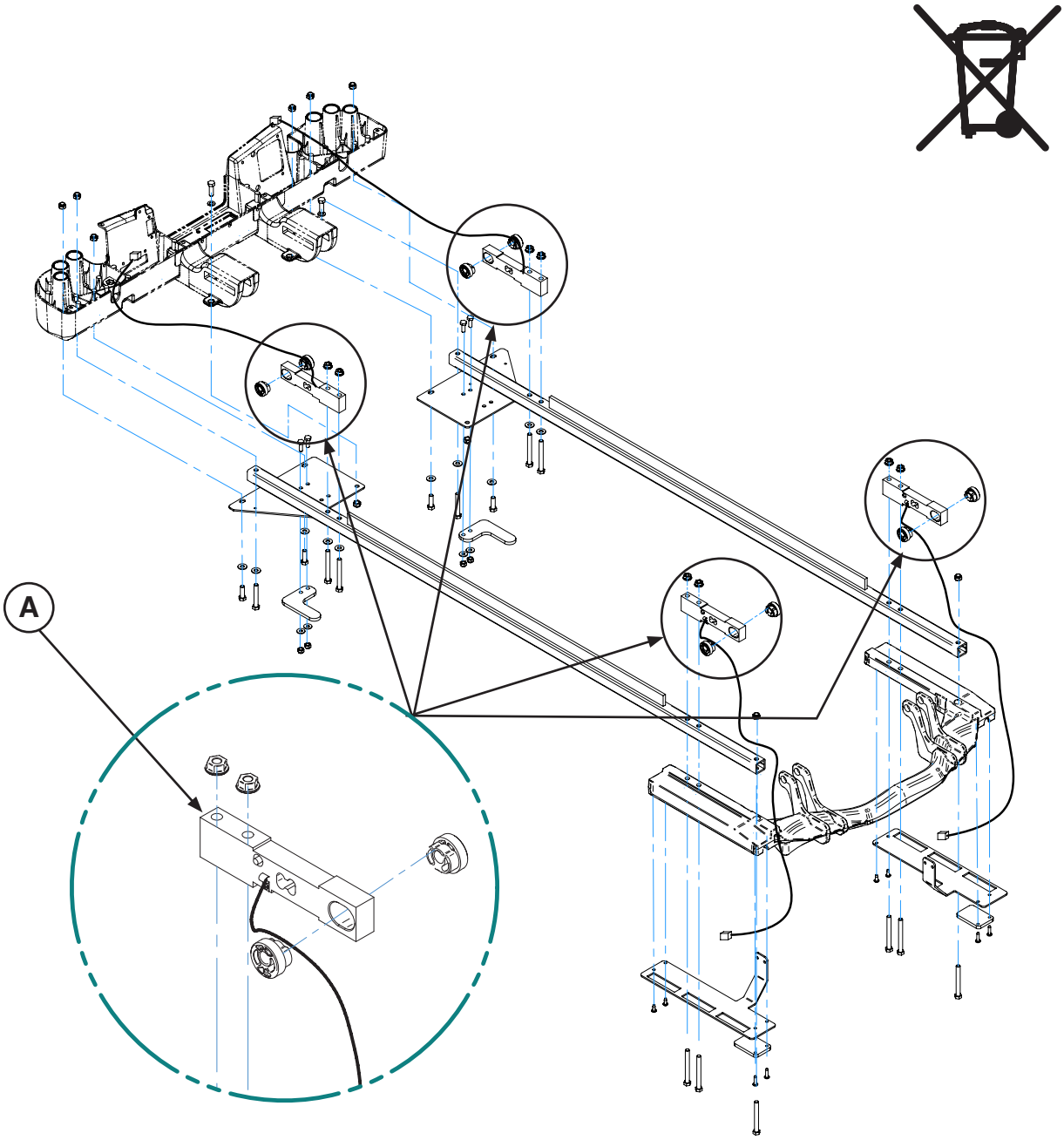

A	QDF27-1372	4

Return To Table of Contents

English Equivalence Part Number: 2131-409-002 REV B

Manufactured for
UNITED STATES
Stryker Medical
3800 E. Centre Ave.,
Portage, Michigan USA
49002

EC	REP

Représentant européen
Stryker France S.A.S.
ZAC – avenue Satolas Green
69881 MEYZIEU Cedex
France

stryker®

2012/03 2131-209-006 REV B www.stryker.com