S3™ MedSurg Bed

REF Model 3002

stryker®

Maintenance Manual

For Parts or Technical Assistance:
USA: 1-800-327-0770

Table of Contents

Symbols . . . 8
- Warning/Caution/Note Definition . . . 9

Introduction . . . 10
- Intended Use – Stryker Secure S3™. . . . 10
- Intended Use – *i*Bed® Wireless with *i*Bed® Awareness. . . . 10
- Specifications . . . 10
- Mattress Specifications . . . 11
- Environmental Conditions . . . 11

Bed Illustration . . . 12
- Contact Information . . . 13
- Serial Number Location . . . 13

Safety Tips and Guidelines . . . 14
- Zoom® Option . . . 16
- *i*Bed® Awareness Option . . . 17
- *i*Bed® Wireless Option. . . . 17
- 115V Option . . . 18

Static Discharge Precautions . . . 19

Setup Procedures. . . . 20
- Zoom® Option . . . 21
- *i*Bed® Wireless Option. . . . 21

Maintenance Menu Guide . . . 22
- Maintenance Menu Screen . . . 22

Preventative Maintenance . . . 30
- Checklist . . . 30
- Grease Points . . . 31

Product Labels . . . 32

Cleaning. . . . 42

Troubleshooting Guide . . . 43

Optional *i*Bed® Wireless Troubleshooting . . . 49

*i*Bed® Awareness System Error Codes . . . 50
- Error Handling . . . 50
- Logged Errors . . . 50
- Error Messages . . . 52

Quick Reference Replacement Parts List . . . 54

Service Information. . . . 56
- Brake Pedal Replacement . . . 56
- Lift Motor and Capacitor Removal and Replacement . . . 57
- Lift Housing Removal and Replacement . . . 58
- Lift Potentiometer Replacement and Adjustment . . . 60
- Lift Potentiometer “Burn-in” Procedure . . . 61
- Lift Motor Isolation Plate Replacement . . . 62
- Lift Motor Coupler Replacement . . . 63
- Power and Sensor Coil Cord Replacement . . . 64
- Power and Sensor Coil Cord Replacement Illustration . . . 65
- Knee Motor Removal and Replacement . . . 66
- Fowler Motor CAM and CAM Guide Replacement . . . 67

Return To Table of Contents

Table of Contents

Service Information (Continued)
Limit Setting - Fowler Motor . . . 68
Fowler Motor Removal and Replacement . . . 69
Fowler Motor Drive Isolator and CPR Decoupler Removal and Replacement . . . 70
Fowler Motor Ball Screw Assembly Replacement . . . 71
Head Motor Brake/Clutch Replacement . . . 72
Load Cell Replacement . . . 73
Load Cell Replacement - Grease Points . . . 74
Power Supply Replacement . . . 75
CPU Board Replacement . . . 75
Replacement of the Wireless Module (Non-Zoom) . . . 76
Replacement of the IR Module (Non-Zoom) . . . 77
Replacement of the Wireless Module (Zoom) . . . 78
Replacement of the IR Module (Zoom) . . . 80
Soft Config. Procedures . . . 82
Optional Smart TV Interface “Burn-In” Procedure . . . 94
Fowler Potentiometer Replacement . . . 95
Fowler Potentiometer “Burn-In” Procedure . . . 95
Zoom® Option Battery Removal and Replacement . . . 96
Zoom® Option DC Motor Board Removal and Replacement . . . 97
Zoom® Option Drive Motor Removal and Replacement . . . 98
Zoom® Option Control Bar Potentiometer Replacement . . . 99
Zoom® Option Control Bar Potentiometer “Burn-In” Procedure . . . 100
Zoom® Option AC Crossover Board Replacement . . . 101
Zoom® Option Display/CPU Board Replacement . . . 102
Head and Foot Siderail Cover Removal . . . 103
Head Siderail Hoop Replacement . . . 104
Footboard Module Removal . . . 105
Footboard Interface Plug Replacement . . . 106
Bed Circuit Boards . . . 107
CPU Board - 3006-308-900 . . . 107
CPU Board - 3006-308-900 (Continued) . . . 108
Software Configuration . . . 109
Power Supply - 0059-157-000 . . . 110
Battery Backup/Zoom® Option, Inverter/Charger Board - 3002-001-030 . . . 111
Battery Backup/Zoom® Option, AC Crossover Board - 2040-031-900 . . . 112
Battery Backup Option, Display/CPU - 2030-031-910 . . . 113
Zoom® Option, Display/CPU - 2040-031-910 . . . 114
*i*Bed Enhanced Nurse Call Option, 37-Pin Plugover Board - 3006-303-900 . . . 116
*i*Bed Enhanced Nurse Call Option, Dip-Switch Settings (Default) . . . 116
Head Wall Output Configuration . . . 118
Battery Backup/Zoom® Option Inverter Protection Features . . . 119
Bed Assembly, Standard Bed . . . 120
Bed Assembly, Battery Backup Option . . . 126
Bed Assembly, Zoom® Option . . . 132
Bed Assembly, *i*Bed® Awareness Option . . . 138
Bed Assembly, *i*Bed® Wireless Option, Blue . . . 140

Table of Contents

Assembly Drawings (Continued)

Bed Assembly, Battery Backup, *i*Bed® Wireless Option . . . 143
Bed Assembly, Zoom®, *i*Bed® Wireless Option . . . 149
Base Assembly, Common Components . . . 155
Base Assembly, Standard Bed . . . 163
Base Ass'y, Battery Backup or Zoom® Option, Common Comp. . . . 173
Base Assembly, Battery Backup Option . . . 184
Base Assembly, Zoom® Option . . . 188
Lift Assembly (Head and Foot End) . . . 194
Lift Assembly . . . 195
Lift Motor Isolation Plate Assembly . . . 199
Brake Shaft Assembly, Standard Bed . . . 200
Brake Shaft Assembly, Battery Back-up or Zoom® Option . . . 200
Brake Crank Assembly . . . 201
Brake Bar Assembly . . . 202
Swivel Lock Caster Assembly - 3006-200-060 . . . 203
Steer Swivel Caster Assembly, White - 3006-200-065 . . . 204
6" Molded Wheel Assembly - 5000-002-010 . . . 205
Bottom Cover . . . 206
Zoom® Option Head End Bottom Cover . . . 206
Battery Backup Option, Power Assembly . . . 207
Battery Backup/Zoom® Option, Battery Tray Assembly . . . 208
Zoom® Option, Drive Train Assembly . . . 209
Zoom® Option, Drive Wheel Lift Lever Assembly . . . 210
Zoom® Option, Base Power Assembly . . . 211
Litter Assembly, Standard Components . . . 212
Litter Assembly, Standard Bed . . . 217
Litter Assembly, Battery Backup Option . . . 224
Litter Assembly, Battery Backup, *i*Bed® Wireless . . . 231
Litter Assembly, Zoom® Option . . . 238
Litter Assembly, Zoom®, *i*Bed® Wireless . . . 245
Foot Prop Assembly . . . 252
Litter CPU Cover Assembly . . . 253
Foot Cover Assembly - 3003-300-042 . . . 254
Electrical Litter Assembly, Standard Bed . . . 255
Electrical Litter Assembly, Battery Backup, *i*Bed® Wireless Option . . . 262
Electrical Litter Assembly, Zoom®, *i*Bed® Wireless Option . . . 270
Mechanical Litter Assembly . . . 278
CPR Damper Assembly Option . . . 284
Lift Header Assembly - No Load Cells . . . 285
Lift Header Assembly with Load Cells . . . 286
Gatch Motor Assembly . . . 287
Fowler Drive Assembly . . . 288
Fowler Brake Kit Assembly -3001-300-775 . . . 290
Standard Bed Fowler Limit Switch Assembly - 3002-343-035 . . . 291
Night Light Assembly - 3006-410-020 . . . 292
Optional 110V Outlet Assembly - 3006-320-050 . . . 294

Table of Contents

Assembly Drawings (Continued)

110V Outlet Box Assembly - 3006-320-060 . . . 296
Optional Scale/Bed Exit Assembly . . . 297
Optional Litter Assembly, Communication Capability . . . 299
Optional Litter Assembly, Nurse Call and Communication. . . . 301
Optional Litter Assembly, Nurse Call and Communication. . . . 302
Optional Litter Assembly, HWI with 1 Stryker Port . . . 303
Optional Litter Assembly, Nurse Call and 1/4” Port. . . . 305
Optional Zoom® Litter Assembly, Headwall Communication . . . 307
Optional Battery Backup/Zoom® Litter Assembly, HWI w/Nurse Call. . . . 309
Optional Battery Backup/Zoom® Litter Assembly, . . . 311
HWI w/Nurse Call & 1 Stryker Port . . . 311
Optional Zoom® Litter Assembly, Nurse Call and 1/4” Port . . . 313
Optional *i*Bed Enhanced Nurse Call, 37-Pin Plugover Assembly . . . 315
Battery Enclosure Assembly . . . 317
Optional Battery Backup Option Head End Enclosure Ass’y . . . 318
Optional Battery Backup, Head End Enclosure Assembly, *i*Bed® Wireless Option. . . . 323
Optional Zoom® Head End Enclosure Assembly . . . 330
Optional Zoom® Litter Assembly, *i*Bed® Wireless Option . . . 336
Optional Battery Backup/Zoom® Assembly, *i*Bed® Wireless Option . . . 343
Head End Siderail Assembly . . . 344
Head End Siderail Assembly with Optional Cardiac Chair. . . . 353
Head End Siderail Assembly with Optional. . . . 354
Gatch/Fowler and Cardiac Chair . . . 354
Head End Siderail Assembly with Optional. . . . 355
Nurse Call, Cardiac Chair and Gatch/Fowler . . . 355
Head End Siderail Assembly with Optional. . . . 356
Nurse Call, Lights, Cardiac Chair and Gatch/Fowler. . . . 356
Head End Siderail Assembly with Optional. . . . 357
Nurse Call, Lights and Cardiac Chair. . . . 357
Head End Siderail Assembly with Optional. . . . 358
Nurse Call, TV/Radio, Lights and Cardiac Chair. . . . 358
Head End Siderail Assembly with Optional. . . . 360
Nurse Call, Lights, Cardiac Chair and Smart TV . . . 360
Head End Siderail Assembly with Optional. . . . 361
Nurse Call, Lights, Cardiac Chair and Smart TV . . . 361
Head End Siderail Assembly with Optional. . . . 362
NC, Lights, Gatch/Fowler, Cardiac Chair and Smart TV . . . 362
Head End Siderail Assembly, Outer Panel . . . 364
Head End Siderail Assembly, Inner Panel . . . 365
Siderail Ass’y, *i*Bed® Awareness Option, HE, Left - 3006-400-100 . . . 367
Siderail Ass’y, *i*Bed® Awareness Option, HE, Right - 3006-400-200. . . . 368
Switch Assembly, *i*Bed® Awareness Option, Head End, . . . 369
3006-400-120 (Left) / 3006-400-220 (Right) . . . 369
Foot End Siderail Assembly . . . 370
Siderail Ass’y, *i*Bed® Awareness Option, FE Left - 3006-400-305 . . . 378
Siderail Ass’y, *i*Bed® Awareness Option, FE, Right - 3006-400-405. . . . 379

Table of Contents

Assembly Drawings (Continued)
Switch Assembly, *i*Bed® Awareness Option, Foot End, . . . 380
3006-400-315 (Left) / 3006-400-415 (Right) . . . 380
Optional Pendant Assembly . . . 381
Pendant - Motion/Nurse Call (3006-315-011). . . . 381
Pendant - Motion/Nurse Call/Smart Tv (Digital) (3006-315-012) . . . 381
Footboard Assembly, Standard . . . 383
Footboard Module Assembly. . . . 385
Footboard Assembly, No Options. . . . 386
Footboard Assembly, Bed Exit Option . . . 388
Footboard Assembly, Bed Exit/Scale Option . . . 390
Footboard Assembly, Bed Exit/Zone Control Option . . . 392
Footboard Assembly, Bed Exit/Scale/Zone Option . . . 394
Footboard Assembly, *i*Bed® Awareness Option . . . 396
Headboard Assembly - 3006-600-010 . . . 398
Optional Accessories . . . 400
CPR Board Assembly - 3006-626-010 . . . 401
Removable I.V. Pole and Mounting Ass'y - 3001-338-010 . . . 402
Removable I.V. Pole Assembly - 3000-300-080 . . . 403
2-Stage I.V. Pole Assembly - 2035-112-000 . . . 404
Dual Head End I.V. Pole Assembly - 2035-113-000. . . . 405
Dual Head End I.V. Pole Assembly - 2040-110-003. . . . 406
2-Stage I.V. Pole - 2035-112-010 & 2035-113-011 . . . 407
I.V. Pole Latch Assembly - 0785-035-103. . . . 408
Defibrillator Tray Assembly - 3006-120-004 . . . 409
90° Power Cord - 3001-334-010 . . . 410
Upright Oxygen Bottle Holder Assembly - 3006-150-000 . . . 411
Accessory Adapter Frame - 3006-333-000 . . . 412
Patient Helper Assembly - 3006-335-000 . . . 413
Patient Helper Roller Assembly - 3006-335-005 . . . 414
Litter Roller Assembly - 3006-345-000 . . . 415
Roller Assembly - 3006-345-005. . . . 416
Bed Extender Assembly - 3006-346-020 . . . 417
Bed Extender Mattress - 3000-318-050. . . . 419
Traction Socket Extensions. . . . 420
Recycling Passport . . . 421
Warranty . . . 429
Limited Warranty . . . 429
To Obtain Parts and Service . . . 429
Service Contract Coverage . . . 429
Service Contract programs. . . . 430
Return Authorization. . . . 430
Damaged Merchandise . . . 430
International Warranty Clause. . . . 430
EMC Information. . . . 431

Symbols

	Warning, consult accompanying documentation
	Safe Working Load Symbol
	Dangerous Voltage Symbol
~	Alternating Current
	Direct Current
	Protective Earth Terminal
	Potential Equalization Symbol
	Type B Equipment: equipment providing a particular degree of protection against electric shock, particularly regarding allowable leakage current and reliability of the protective earth connection. Class 1 Equipment: equipment in which protection against electric shock does not rely on BASIC INSULATION only, but which includes an additional safety precaution in that means are provided for the connection of the EQUIPMENT to the protective earth conductor in the fixed wiring of the installation in such a way that ACCESSIBLE METAL PARTS cannot become live in the event of a failure of the BASIC INSULATION. Mode of Operation: Continuous
IPX4	Protection from liquid splash
CLASSIFIED C UL US	Medical Equipment Classified by Underwriters Laboratories Inc. with Respect to Electric Shock, Fire, Mechanical and Other Specified Hazards Only in Accordance with UL 60601–1, First Edition (2003) and CAN/CSA C22.2 No. 601.1–M90 with updates 1 and 2 and IEC 60601-1 (1998) with Amendment 1 (1991) and Amendment 2 (1995).
	In accordance with European Directive 2002/96/EC on Waste Electrical and Electronic Equipment, this symbol indicates that the product must not be disposed of as unsorted municipal waste, but should be collected separately. Refer to your local distributor for return and/or collection systems available in your country.
	Non-ionizing radiation; i.e. RF transmitter (WiFi)
	This icon means the ***i*Bed Locator is connected**.
	This icon means the ***i*Bed Locator is not connected**.
	This icon means the **Network is connected**.
X	This icon means the **Network is not connected**.

Return To Table of Contents

WARNING/CAUTION/NOTE DEFINITION

The words **Warning**, **Caution** and **Note** carry special meanings and should be carefully reviewed.

WARNING

Alerts the reader about a situation, which if not avoided, could result in death or serious injury. It may also describe potential serious adverse reactions and safety hazards.

CAUTION

Alerts the reader of a potentially hazardous situation, which if not avoided, may result in minor or moderate injury to the operator or patient or damage to the equipment or other property. This includes special care necessary for the safe and effective use of the device and the care necessary to avoid damage to a device that may occur as a result of use or misuse.

Note

This provides special information to make maintenance easier or important instructions clearer.

Return To Table of Contents

This manual is designed to assist you with the operations of the S3™ MedSurg Bed, Model 3002. Read it thoroughly before using the equipment.

INTENDED USE – STRYKER SECURE S3™

This device is an AC-powered adjustable hospital bed intended for medical purposes that consists of a bed with a built-in motor and remote controls that can be operated by the patient to adjust the height and surface contour of the bed. The device includes movable and latchable siderails.

INTENDED USE – *i*BED® WIRELESS WITH *i*BED® AWARENESS

The intended use for the *i*Bed® Wireless (with *i*Bed® Awareness) is to assist clinical staff to monitor bed parameters on specific Stryker beds. The desired bed parameters will be set by clinicians at the bedside. The *i*Bed® Wireless software is intended to be used only with specifically enabled Stryker beds that have been verified and validated with the *i*Bed® Wireless software, and is not intended to provide bed status information for non-Stryker beds. The *i*Bed® Wireless software is not intended to communicate any patient status information, nor to permanently store any type of data. The *i*Bed® Wireless with *i*Bed® Awareness System is not intended to provide automated treatment decisions or as a substitute for professional healthcare judgment. The *i*Bed® Wireless with *i*Bed® Awareness System is not a replacement or substitute for vital signs monitoring or alert equipment. All patient medical diagnosis and treatment are to be performed under direct supervision and oversight of an appropriate health care professional.

SPECIFICATIONS

	Safe Working Load **Note:** Safe Working Load indicates the sum of the patient, mattress, and accessory weight.		500 lbs	227 kg
Bed Weight			570 lbs	259 kg
Scale System Capacity (optional equipment). Loads weighing up to			500 lbs	227 kg
Scale System Accuracy (optional equipment)			± 2 pounds at 0˚ - ± 10˚ Trendelenburg for patients weighing 100 pounds or less ± 2% of the total patient weight at 0˚ - ± 10˚ Trendelenburg for patients weighing greater than 100 pounds	
Overall Length/ Width	Standard Bed	Siderails Up	93” x 41-1/2”	236,2 cm x 105,41 cm
		Siderails Down	93” x 39-1/2”	236,2 cm x 100,3 cm
	Battery Backup/ Zoom® Bed	Siderails Up	95” x 41-1/2”	241,3 cm x 105,4 cm
		Siderails Down	95” x 39-1/2”	241,3 cm x 100,3 cm
Patient Sleep Surface - Standard Bed			84” x 35”	213,4 cm x 88,9 cm
Bed Height to Top of Seat Litter - 6” Casters		Standard	16” to 30” ±0.5	40,6 cm to 76,2 cm
		Beds with Battery Backup/Zoom® Option	19.5” to 30”	49,5 cm to 76,2 cm
Litter Platform to Top of Siderail	Full Up	Head End Siderail	15”	38,1 cm
	Full Up	Foot End Siderail	15-1/2”	39,37 cm
Space Between Siderails (Full Up)			2-1/4”	5,72 cm
Knee Gatch Angle			0˚ to 45˚	
Fowler Angle			0˚ to 60˚	

Return To Table of Contents

Trendelenburg/Reverse Trendelenburg	+12˚ to -10˚ ± 1˚ +10˚ to -10˚ ± 1˚ - Beds with Battery Backup/Zoom® Option
Electrical Requirements - all electrical requirements meet UL 2601 specifications.	115VAC, 60Hz, 8A
Wireless Radio (*i*Bed® Wireless Option)	802.11 b/g, 2.4 GHz • Minimum Operational Signal Strength: -65 dB • Supported Securities: WEP WPA-PSK (TKIP) WPA2-PSK (CCMP/AES) • Supports IPv4 and DHCPv4
Outlet Option	115VAC, 60Hz, 10A (not available with Zoom® Option)
Battery Voltage	(2) 12V 31Ah - Battery Backup/Zoom® (Gel Cell Battery) (1) 9V - Nurse Call Option (Alkaline Battery)

MATTRESS SPECIFICATIONS

Thickness	6”	15.2 cm
Width	>= 35”	>= 88.9 cm
Length	>= 84”	>= 213.4 cm
ILD	80 lbs	36.3 kg

The above stated mattress specifications assist in ensuring the product conforms to HBSW and IEC specifications.

ENVIRONMENTAL CONDITIONS

Environmental Conditions	Operation	Storage and Transportation
Ambient Temperature	104 °F (40 °C) 50 °F (10 °C)	140 °F (60 °C) -22 °F (-30 °C)
Relative Humidity (Non-Condensing)	75% 30%	95% 10%
Atmospheric Pressure	1060 hPa 700 hPa	1060 hPa 500 hPa

Stryker reserves the right to change specifications without notice.

Specifications listed are approximate and may vary slightly from unit to unit or by power supply fluctuations.

Return To Table of Contents

Bed Illustration

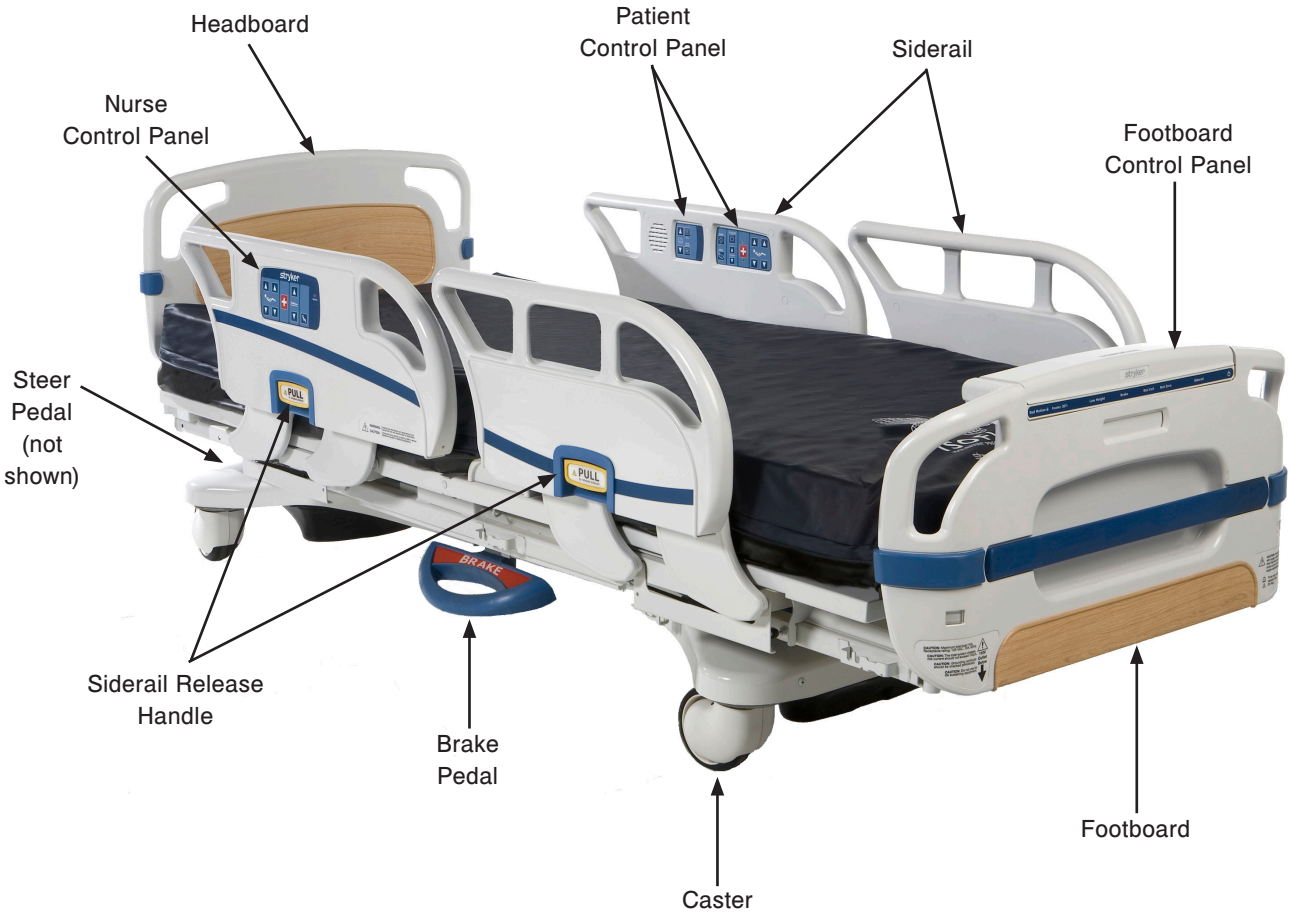

Return To Table of Contents

CONTACT INFORMATION

Contact Stryker Customer Service or Technical Support at (800) 327-0770.

Stryker Medical
3800 E. Centre Avenue
Portage, Michigan 49002
USA

Please have the serial number (A) of your Stryker product available when calling Stryker Customer Service or Technical Support. Include the serial number in all written communication.

SERIAL NUMBER LOCATION

The serial number is located at the head end of the bed just below the headboard and above the power cord where it comes out from the frame.

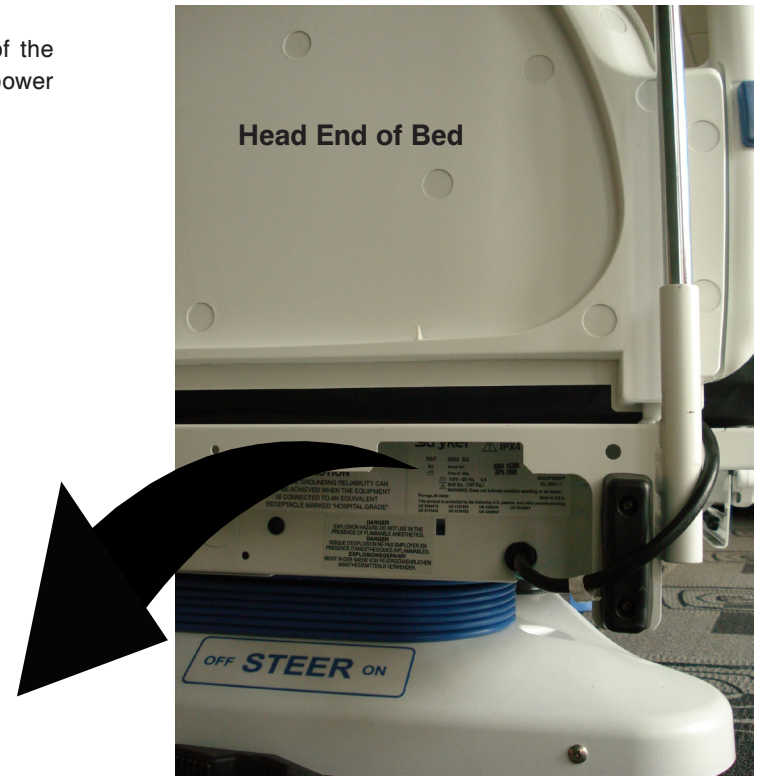

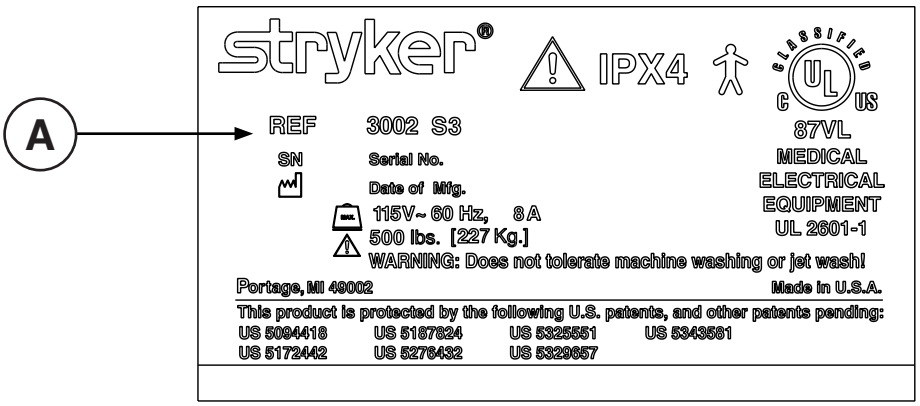

Return To Table of Contents

Safety Tips and Guidelines

Before operating the S3™ MedSurg Bed, Model 3002, it is important to read and understand all information in this manual. Carefully read and strictly follow the safety guidelines listed on this page. It is important that all users have been trained and educated on the inherent hazards associated with the usage of electric beds.

WARNING

- To prevent permanent damage to this unit, the unit must reach room temperature prior to conducting any setup and/or unit operations.
- Danger: Explosion hazard. Do not use in the presence of flammable anesthetics. Always apply the caster brakes when a patient is getting on or off the bed.
- Always keep the caster brakes applied when a patient is on the bed (except during transport). After the brake pedal is applied, push on the bed to ensure the brakes are locked. Serious injury could result if the bed moves while a patient is getting in or out of bed.
- Ensure the brakes are completely released prior to moving the unit. Attempting to move the unit with the brakes actuated could result in injury to the user and/or patient.
- Do not attempt to move the foot end of the bed laterally when the steer pedal is activated. When the steer pedal is activated, the steer caster at the foot end of the bed cannot swivel. Attempting to move the bed laterally when the steer pedal is activated may cause injury to the user.
- The 3002 S3™ MedSurg Bed is not intended for use with patients less than two years of age.
- Serious injury can result if caution is not used when operating the unit. Operate the unit only when all persons are clear of the electrical and mechanical systems.
- To help reduce the number and severity of falls by patients, always leave the bed in the lowest position when the patient is unattended.
- When attaching equipment to the frame, ensure it will not impede normal frame operation. For example: hooks on hanging equipment must not actuate control buttons, equipment must not hide the nurse call button, foley bags must not rest on brake pedal, etc. Use only a Stryker supplied interface cable. Use of any other cable may cause the bed to function improperly, which may result in patient or user injury.
- The 3002 S3™ MedSurg Bed is equipped with a hospital grade plug for protection against electric shock hazard. It must be plugged directly into a properly grounded three prong receptacle. Grounding reliability can be achieved only when a hospital grade receptacle is used.
- When raising the siderails, listen for the “click”. When raising the siderail, the first click will indicate you can return to the intermediate position, the second click indicates its full up position. Once in position, move siderail from side to side to ensure it is locked into position. Siderails are not intended to be a patient restraint device. It is the responsibility of attending medical personnel to determine the degree of restraint and the siderail positioning to ensure a patient will remain safely in bed.
- The Bed Exit System is intended only to aid in the detection of a patient exiting the unit. It is NOT intended to replace patient monitoring protocol. The bed exit system signals when a patient is about to exit. Adding or subtracting objects from the frame after zeroing the weigh system may cause a reduction in the sensitivity of the bed exit system.
- Before servicing or cleaning the bed, **always** unplug the bed power cord from the wall socket and push the battery power on/off switch to the “OFF” position (if applicable). When working under a bed in the high position, always place blocks under the litter frame and apply the brakes to prevent injury in case the Bed Down switch is accidently pressed.
- To avoid pinching your fingers, place the I.V. pole in the upright position before using the drive handle.
- When using any mattress and/or mattress overlay that increases the overall height greater than 6,” extra caution and/or operator supervision is required to help reduce the likelihood of a patient fall occurring.

Return To Table of Contents

⚠ WARNING (CONTINUED)

To avoid possible injury and to assure proper operation when using model number 2750, 2920, 2950 or 2981 mattress:

- Confirm proper scale system operation following mattress installation. For best results, secure the therapy mattress power cord to prevent damage to the cord or interference with the bed frame and the scale system.
- Do not zero bed scales or weigh patient with Percussion, Vibration, Rotation or Turn Assist active. Patient motion and position resulting from the dynamic therapy mattress may adversely affect scale system performance.
- Do no initialize ("arm") bed exit with Percussion, Vibration, Rotation or Turn Assist active. The patient motion and position resulting from the dynamic therapy mattress may adversely affect bed exit system performance.
- When using an XPRT (2950), Position PRO (2920), Impression (2981) or Symmetric Aire (2750) mattress, extra caution and/or operator supervision is required to help reduce the likelihood of a patient fall occurring.

⚠ CAUTION

- When large spills occur in the area of the circuit boards, 115 volt cables and motors, immediately unplug the bed power cord from the wall socket. Remove the patient from the bed and clean up the fluid. Have maintenance completely check the bed. Fluids can affect the operational capabilities of any electrical product. DO NOT put the bed back into service until it is completely dry and has been thoroughly tested for safe operation.
- Preventative maintenance should be performed at a minimum of annually to ensure all bed features are functioning properly. Close attention should be given to safety features including, but not limited to, safety side latching mechanisms, frayed electrical cords and components, all electrical controls returning to the off or neutral position when released, caster braking systems, no controls or cabling entangled in bed mechanisms, leakage current 300 µA (microamps) maximum, scale and bed exit systems calibrated properly, and the siderail gas spring not leaking oil.
- Because individual beds may have different options, footboards should not be moved from one bed to another. Mixing footboards could result in unpredictable bed operation.
- The lockout buttons on the footboard lock the Fowler, Gatch and Bed Up/Down functions and prevent motion of the bed. It is the responsibility of attending medical personnel to determine whether these functions should be locked and to use the buttons accordingly.
- The maximum safe working load for each I.V. pole is 40 pounds.
- I.V. Poles should not be used as a bed push/pull device.
- Scale function may be affected by siderail/caster interference. With the litter fully lowered or lowered in Reverse Trendelenburg, the siderails tucked under the litter in the storage position and the casters turned, there is the potential for interference between the siderail and the caster. Raise the siderails when lowering the litter to the full down position to prevent the interference from causing the scale system to weigh inaccurately
- The use of a mattress overlay may reduce the effectiveness of the siderail.
- The cleanliness and integrity of both ground chains must be maintained to minimize static build up and discharge.
- Do not add or remove weight when the bed exit system is armed.
- There is a possible fire hazard when using half bed length type oxygen administering equipment. Ensure that the siderails are outside of the tent.
- There is a possible fire hazard when used with oxygen administering equipment of other than the nasal or mask type. Lock the control at foot of bed when using oxygen administering equipment.
- The weight of the foley bags placed on isolated bag hooks should not exceed five pounds.
- The weight of pumps placed on footboard pump holder should not exceed 45 pounds.
- The safe working load of the defibrillator tray is 40 lbs.
- The safe working load of the oxygen holder is 45 lbs.
- Bed may be equipped with an integrated scale intended to weigh the patient in bed. If the scale output is being used to determine diagnosis and treatment, please consult with a medical professional and/or additional weight references.
- Scale accuracy specifications do not apply for patients under 20 lbs.

Return To Table of Contents

ZOOM® OPTION

In addition to the previous warnings and cautions, all of the following warnings and cautions apply to units equipped with the Zoom® option.

WARNING

- The 3002 S3™ MedSurg Bed is intended for use by trained hospital personnel only. Failure to properly train personnel could result in injury.
- USE CAUTION while maneuvering the unit with the drive wheel activated. Always ensure there are no obstacles near the unit while the drive wheel is activated. Injury to the patient, user or bystanders, or damage to the frame or surrounding equipment could occur if the unit collides with an obstacle.
- Use caution when transporting the unit down hallways, through doors, in and out of elevators, etc. Damage to the siderails or other parts of the unit could occur if the unit comes in contact with walls or door frames.
- Put the drive wheel in the neutral position and release the brakes before pushing the unit manually. Do not attempt to push the unit manually with the drive wheel engaged. The unit will be difficult to push and injury could result.
- If unanticipated motion occurs, unplug the power cord from the wall socket, push the battery power on/off switch to the ”OFF” position (the LED will not be illuminated) and actuate the drive wheel pedal to the neutral position.
- The power save mode is activated after one hour on battery power with no motion switch activation. Functions including Bed Exit, Scale, *i*Bed® Awareness and Motion will cease to operate when the unit enters the power save mode. Injury to the patient could occur if proper patient monitoring protocol is not observed.
- Always unplug the power cord and push the battery power on/off switch to the “OFF” position before service or cleaning. When working under the frame, always place blocks under the litter frame to prevent injury in case the Bed Down switch is accidently activated.
- Due to the weight the battery adds to the bed (approximately 50 pounds), additional force is required to move the bed. Caution should be used when transporting the bed. Additional assistance should be used when necessary. Failure to use caution while transporting the bed may result in injury to the user.
- Battery posts, terminals and related accessories contain lead and lead compounds, chemicals known to the State of California to cause cancer and birth defects or other reproductive harm. Wash hands after handling.
- Do not modify the 3002 S3™ MedSurg Bed. Modifying the unit can cause unpredictable operation resulting in injury to the patient or operator. Modifying the unit will also void its warranty.

CAUTION

- To avoid damage while transporting the bed, verify the I.V. pole is at a low enough height to allow it to safely pass through door openings and under light fixtures.
- The battery tray assembly weighs 50 pounds. Take care when removing the two hex head screws securing it to the base frame or personal injury could result.

Return To Table of Contents

*i*BED® AWARENESS OPTION

In addition to the previous warnings and cautions, all of the following warnings and cautions apply to units equipped with the *i*Bed® Awareness option.

⚠ WARNING

- The optional *i*Bed® Awareness system only indicates the siderail position, it does NOT indicate if the siderail is locked. It is the caregiver's responsibility to ensure that the siderails are locked after every move and also before leaving a patient in the room.
- The optional *i*Bed® Awareness system indicator lights are only an aid to the caregiver, and in no way replace the caregiver's responsibility of checking on patients. Caregivers should not rely on the lights to perform their duties.
- Before arming the optional *i*Bed® Awareness system, the nurse must physically verify that the siderails are locked.

⚠ CAUTION

- If the optional *i*Bed® Awareness system is being used, ensure the bed is in the desirable state (*i*Bed® Awareness ON and with the light green) before leaving the room.
- If the optional *i*Bed® Awareness system is being used and the *i*Bed® Awareness is alerting, do not turn off *i*Bed® Awareness as the display information to troubleshoot the bed will get lost.
- If the optional *i*Bed® Awareness system is being used, use of accessories that cover the center and side alert lights at the footboard are not recommended.

*i*BED® WIRELESS OPTION

In addition to the previous warnings and cautions, all of the following warnings and cautions apply to units equipped with the *i*Bed® Wireless option.

⚠ WARNING

- The optional *i*Bed® Wireless function provides remote information of bedside information to aid the caregiver. In no way does this option replace the caregiver's responsibility of checking on patients. Caregivers should not rely **only** on the remote information to perform their duties.
- The *i*Bed Locator must be correctly associated or mapped to the room / location in order to provide accurate location information. Failure to properly map the *i*Bed Locator to the room / location will yield incorrect remote information. Additionally, if an *i*Bed Locator is to be moved after it has been installed and mapped, it must be re-mapped to the new room / location in which it is moved to. *i*Bed Locator re-mapping will also be required if the room / location information is changed after initial installation.
- Line of sight between *i*Bed Locator and the head end of bed must be free of obstruction at all times. Any line of sight interference could impede communication and cause the room / location information not to be available.
- *i*Bed® Wireless compatible footboard must be used for all *i*Bed® Wireless beds. Some *i*Bed® Wireless functionality will be lost if an older version of the footboard is used.
- *i*Bed® Wireless functionality shall be verified after installation. Failure to do may result loss of remote information or wrong remote information. At a minimum, verify *i*Bed locator communication with bed in all bed positions, and *i*Bed® Wireless communication with the wireless access point.
- *i*Bed Locators must be installed more than 71" apart from one another in the same room, such as in a semi-private room with more than one bed. Failure to do so could result in a bed communicating with the other adjacent *i*Bed Locator, thus providing incorrect bed location information.

⚠ CAUTION

- Wireless bed only transmits bed information and not nurse call information. The wireless bed is not intended to replace the existing nurse call system.

Return To Table of Contents

115V OPTION

In addition to the previous warnings and cautions, all of the following warnings and cautions apply to units equipped with the 115V option.

- Only use equipment with the following electrical specs: 115VAC; 10A; 60Hz. Maximum total load drawn by equipment used in this receptacle outlet must not exceed 10A. The total system chassis risk current should not exceed 300 microamps. Grounding continuity should be checked periodically.
- To avoid risk of electrical shock, unplug all power cords before opening the service compartment, junction box or receptacle.
- Do not use the optional 115V outlet for life sustaining equipment.

Return To Table of Contents

Static Discharge Precautions

The electronic circuits in the 3002 S3™ MedSurg Bed are completely protected from static electricity damage only while the bed is assembled. It is extremely important that all service personnel always use adequate static protection when servicing the electronic systems of the 3002 S3™ MedSurg Bed. Whenever you are touching wires, you should be using static protection.

Static Protection Equipment

The necessary equipment for proper static protection is:

- 1 static wrist strap; 3M part number 2214 or equivalent,
- 1 grounding plug; 3M part number 61038 or equivalent,
- 1 test lead with a banana plug on one end and an alligator clip on the other; Smith part number N132B699 or equivalent.

CAUTION

All electronic service parts will be shipped in static shielding bags. Do not open the bags until you have completed steps 2 and 3 of the following procedure. Do not place unprotected circuit boards on the floor. All circuit boards to be returned to Stryker Medical should be shipped in the static shielding bags the new boards were shipped in.

Static Protection Procedure

1. Unplug the power cord from the wall receptacle.
2. Insert the grounding plug into a properly grounded hospital grade wall receptacle. Plug the banana plug of the test lead into the receptacle on the grounding plug. Connect the alligator clip on the other end of the test lead to a ground point on the bed.
3. Place the static control wrist strap on your wrist. Connect the alligator clip at the other end of the wrist strap cord to a ground point on the bed.

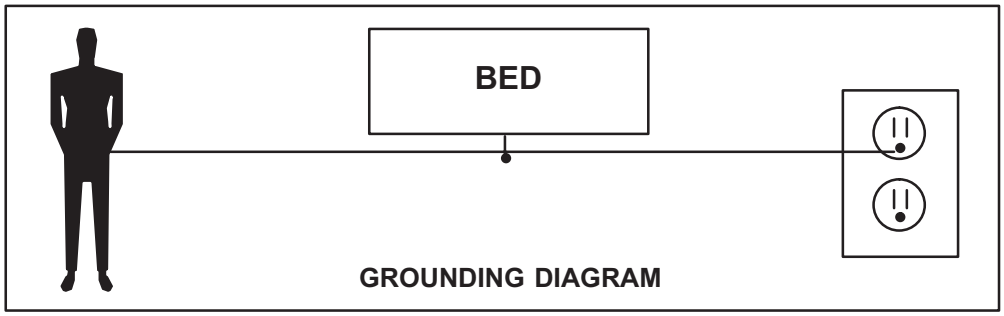

Return To Table of Contents

Setup Procedures

To prevent permanent damage to this unit, the unit must reach room temperature prior to conducting any setup and/or unit operations.

It is important that the 3002 S3™ MedSurg Bed is working properly before it is put into service. The following list will help ensure that each part of the bed is tested.

⚠ WARNING

- The 3002 S3™ MedSurg Bed is equipped with a hospital grade plug for protection against electric shock hazard. It must be plugged directly into a properly grounded three prong receptacle. Grounding reliability can be achieved only when a hospital grade receptacle is used.
- Use only a Stryker supplied interface cable. Use of any other cable may cause the bed to function improperly which may result in patient or user injury.
- Ensure there is no patient on the bed during the setup procedure.

1. Plug the bed into a properly grounded, hospital grade wall receptacle and ensure the ⏻ LED light at the foot end of the bed comes on.
2. Plug the optional interface cable into the 37 pin connector under the litter frame at the head end of the bed, into the “Patient Station”, “Head Wall”, “Docker Station”, or equivalent (whichever applies). Test the interface cable to verify it is functioning properly.
3. Ensure the siderails raise, lower, lock in the up position, lock in the intermediate position when lowered and store smoothly (see Operations Manual for further details).
4. Ensure that all four casters lock when the brake pedal is engaged ((see Operations Manual for further details).
5. Raise the fowler (head of bed) up to approximately 60^0. Squeeze the CPR release handle and ensure the back will drop with minimal effort.

   Note
   Ensure that the “Brake” LED located on the outside of the head end siderails and on the footboard control panel blink when the brakes are not engaged.

6. Perform each function on the footboard control panel to ensure that each function is working properly (see Operations Manual for further details).
7. Perform each function on both head end siderails to ensure that each is working properly ((see Operations Manual for further details).
8. Activate the motion stop system to ensure it is functioning properly; press and hold down the BED DOWN button. As the bed lowers, push up on the motion interrupt pan under the bed and ensure the downward motion stops. Release the pan and allow the downward motion to continue.

   Note
   The bed’s upward motion or other functions are not disrupted by the motion stop system.

9. If the bed is equipped with the Nurse Call option, verify it is functioning properly prior to patient use.

Return To Table of Contents

ZOOM® OPTION

If your bed is equipped with the Zoom® drive wheel option, run through the setup procedures on the previous page and then continue with the procedures listed below.

- Plug the power cord into a properly grounded, hospital grade wall receptacle. The 12V batteries that provide power to the drive wheel and backup power to the unit functions will charge whenever the power cord is plugged into the wall socket. The batteries require approximately 10 hours of charging time before the bed is put into service.
- Unplug the power cord from the wall socket. Push the battery power switch located on the lower left corner of the head end to the On position. Again, verify each function on the footboard and siderails is operating properly.
- With the battery power switch in the On position and the brakes engaged, ensure the “Release Brakes” LED on the head end control panel is illuminated.
- With the battery power switch in the On position and the drive wheel in the neutral position (not touching the floor), ensure the “Engage Drive Wheel” LED on the head end control panel is illuminated.
- Run through the operation of the drive wheel ((see Operations Manual for further details).

If any problems are found during bed setup, contact Stryker Technical Support at 800-327-0770.

*i*BED® WIRELESS OPTION

In order for your bed to be capable of receiving a wireless connection the *i*Bed Locator needs to be installed on the wall at the head end of the bed. The *i*Bed Locator communicates with the IR Module installed in your bed. For detailed instructions on mounting the 5212 *i*Bed Locator refer to the instruction sheet (part number 5212-009-101) packaged with your optional 5212 *i*Bed Locator Installation kit.

If any problems are found during the *i*Bed Locator Installation, contact Stryker Technical Support at (800) 327–0770.

⚠ WARNING

- The *i*Bed Locator must be correctly associated or mapped to the room / location in order to provide accurate location information. Failure to properly map the *i*Bed Locator to the room / location will yield incorrect remote information. Additionally, if an *i*Bed Locator is to be moved after it has been installed and mapped, it must be re-mapped to the new room / location in which it is moved to. *i*Bed Locator re-mapping will also be required if the room / location information is changed after initial installation.

The wireless connection settings need to be loaded before the device will communicate with the *i*Bed Server application. Reference the ***i*Bed Server Installation and Configuration Manual (5212-009-001).**

Note
*i*Bed® Wireless will not send *i*Bed Locator information unless the brake is set (Battery Backup and Zoom® options only).

Return To Table of Contents

MAINTENANCE MENU SCREEN

The Maintenance Menu contains all of the non-regularly accessible features of the product. This menu provides an interface to the user and/or service personnel in order to provide the ability to control and access maintenance features.

Maintenance Menu Items

The following are menu items listed in the maintenance menu screen for a fully loaded bed:
1. Calib. Scale (Calibrate Scale)
2. TV Config. (TV Configuration)
3. Scale Info. (Scale Info/Stats)
4. Clear Scale Stats
5. Error Log (View Error Log)
6. Clear Errors (Clear Error Log)
7. Scale Units (Lock Scale Units)
8. About (About Product)
9. Exit Menu (Exit Maintenance)

The following are menu items listed in the maintenance menu screen for a standard bed:
1. TV Config. (TV Configuration)
2. Error Log (View Error Log)
3. Clear Errors (Clear Error Log)
4. About (About Product)
5. Exit Menu (Exit Maintenance)

The following are menu items listed in the maintenance menu screen for an *i*Bed:
1. Calib. Scale (Calibrate Scale)
2. TV Config. (TV Configuration)
3. Scale Info. (Scale Info/Stats)
4. Clear Scale Stats (only if you have scale option)
5. Error Log (View Error Log)
6. Clear Errors (Clear Error Log)
7. Scale Units (Lock Scale Units)
8. About (About Product)
9. Exit Menu (Exit Maintenance)

- Each of the menu items provides the operator with a different function.
- Using the up and down menu buttons, you can scroll though the menu elements.
- To select a menu item, scroll to the desired menu item using the Up and Down menu button. When the desired feature is highlighted, press the Enter/Check button. Depending on the feature, the display will move into the sequence for the feature selected.

Load Cell Check (Where applicable: for beds with a minimum of Scale or either kind of Bed Exit)

- This feature automatically checks all four load cells to make sure they are working properly.
- The purpose of this feature is to provide a self diagnostic of the load cells.
- When maintenance is entered, a self-diagnostic feature should run and display results.
- While the procedure is running, the following message is displayed: “Load Cell Check”.
- Any load cell errors will be displayed as a message “Load Cell Error” and then, depending on the error, an HL, HR, FL or FR will be displayed below the message. (Refer to the Error Handling Section, page 50).
- If no errors are present, then the maintenance menu will be displayed and menu items 1-9 above may be accessed where applicable.

Return To Table of Contents

Maintenance Menu (Continued)

Scale Calibration

- This feature allows the operator to calibrate the scale system.
- This calibration is used to provide the system with a weight offset that occurs when the product is put into trend and reverse trend.
- This calibration does not calibrate the load cells; the load cells are pre-calibrated.

To calibrate the scale system:

1. In the Maintenance Menu, select the Calibrate Scale item; then press and hold the Enter/Check button.
2. The display should present the following message:
   “Do Not Touch Bed”. The message should be flashing.
3. Use the up and down arrow to select the proper weight (50lbs is the default).
4. Press the “Enter/Check” button when the display shows the proper weight.
5. The display should present the following message:
   “Place Weight in Center”.
6. Place the weight in the center of the bed.
7. Press the “Enter/Check” button when completed.
8. The display should present the following message:
   “Press Reverse Trend”.
9. Press the reverse trend button.
10. The display should present the following message when the bed is in the proper position:
    “Release Button”.
11. Release the button and do not touch the bed. When the button is released, the following message is displayed:
    “Do Not Touch Bed”. The message should be flashing.
12. The display should present the following message when the bed is ready to continue:
    “Press Trend”.
13. Press the trend button.
14. The display should present the following message when the bed in the proper position:
    “Release Button”.
15. Release the button and do not touch the bed. When the button is released the following message is displayed:
    “Do Not Touch Bed”. The message should be flashing.
16. The display should present the following message when the bed is ready to continue:
    “Save Calibration?”.
17. Press the “Enter/Check” button to save the calibration.
18. The display should present the following message when the bed is ready to continue:
    “Save Successful”.

Note:

If an error occurs during the procedure the display will show an error message, “Calibration Error,” for four seconds.

WARNING

Ensure there is no patient on the bed while the calibration procedure is being performed.

Return To Table of Contents

Maintenance Menu (Continued)

TV Configuration

- This feature allows the operator to set up the TV configuration.
- This configuration provides the product with the information to communicate with the proper entertainment system.

To Configure the System:

1. In the Maintenance Menu, select the TV Config. item; then press and hold the Enter/Check button.
2. The TV Configuration Screen will be displayed. The current TV selection will be highlighted.
3. Use the up and down arrow buttons to highlight the desired item.
4. Press the “Enter/Check” button to select the new setting.
5. The following message will be shown on the display screen when the new setting is saved: **“Save Successful”**.
6. The TV Configuration screen should reappear after two seconds and the new setting should be highlighted.
7. If you press the Exit/X button or if the screen remains dormant for more than 30 seconds, the display will return you to the maintenance menu without saving any changes.

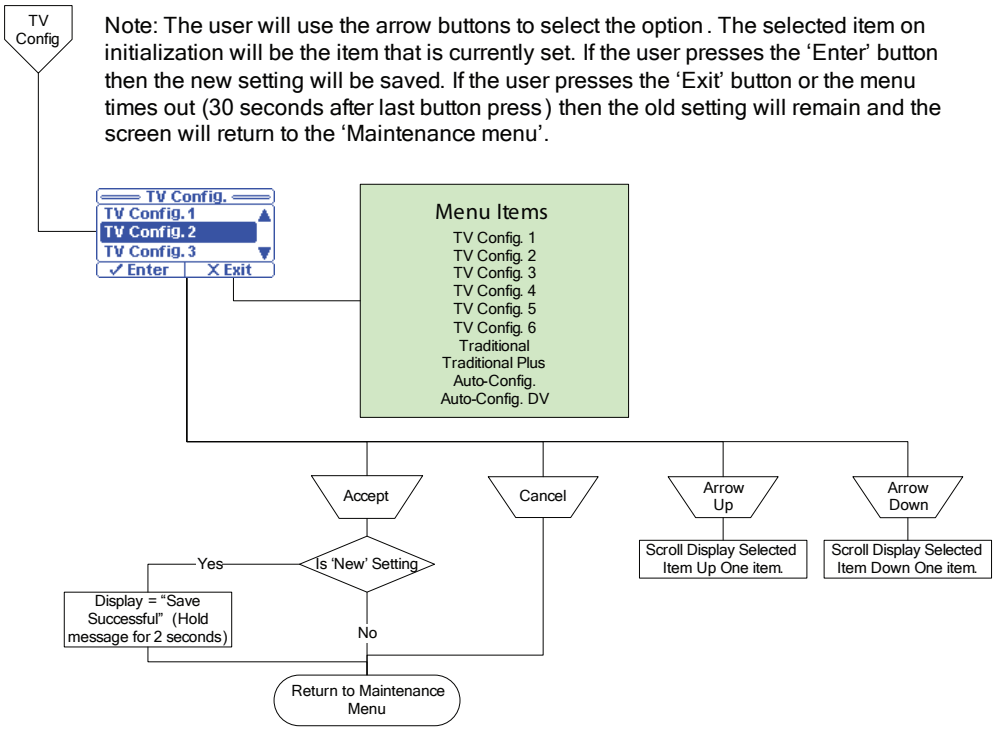

Return To Table of Contents

Maintenance Menu (Continued)

Scale Information

- This diagnostic feature shows data from the load cells. This includes the raw count data, the weight data (in lb), the maximums and the minimums.
- When the menu item is selected, the weight data from the four load cells will be displayed.
- When cancel/exit is pressed, the menu should return.
- Values should update every 0.25 seconds.

Note: The scale information and statistics are important when trying to diagnose the scale system.

To View the Scale Information:

1. In the Maintenance Menu select the Scale Info item; then press and hold the Enter/Check button.
2. The Scale Info screen will be displayed.
3. Use the arrows to navigate through the four screens: lb, counts, maximums, and minimums. Each screen will have the four load cells and the information in the format of that screen.
4. Press the Exit/X button to return to the Maintenance Menu screen.

Clear Scale Stats

- This diagnostic feature allows the statistics for the load cells to be cleared.

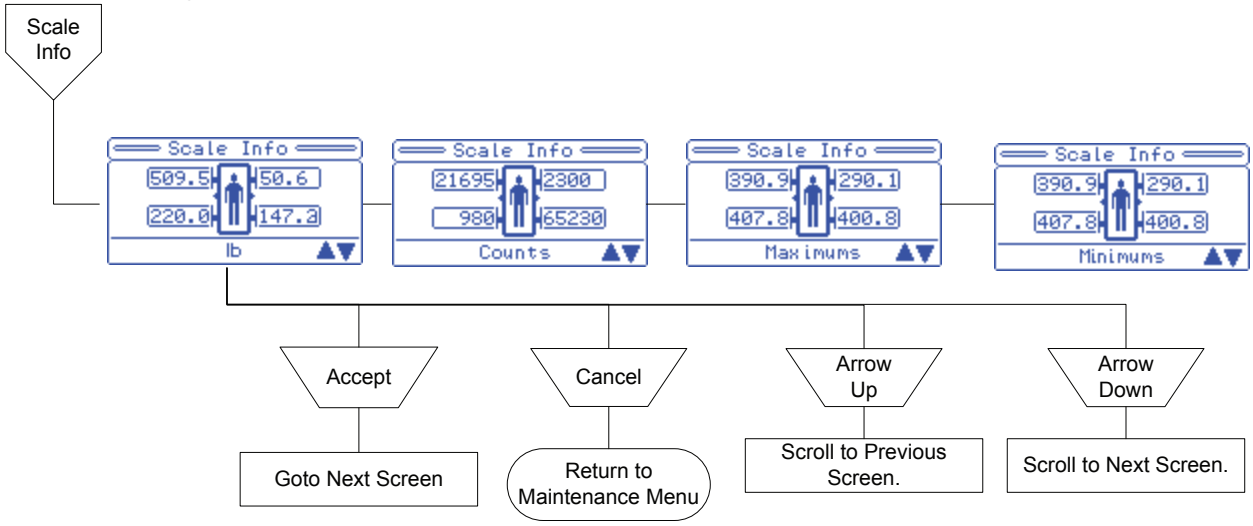

- This is done to remove old data. This may be done because the load cell is being replaced or the system has been re-calibrated.
- When the menu item is selected and held for one second, the statistics should be erased and a message should be displayed. When cancel/exit is pressed, the menu should return to the Maintenance Menu Screen.

Note: The scale statistics (Maximums and Minimums) can be cleared using this feature.
To Clear the Information:

1. In the Maintenance Menu, select the Clear Scale Stats item; then press and hold the Enter/Check button.
2. The following message will be shown on the display screen:
   "Clear Scale Statistics?"

Return To Table of Contents

Maintenance Menu (Continued)

3. Press and hold the Enter/Check button to clear the stats.
4. The following message will be shown on the display screen when the stats are cleared: **“Statistics Cleared”**.
5. The Maintenance Menu screen should reappear after two seconds and the new setting should be highlighted.

Note: Items that are cleared during this operation are:
- Maximums (for each load cell)
- Minimums (for each load cell)

Error Log

- This feature allows the operator to view the Error Log.
- This log provides information pertaining to the error system and any errors that are logged during product use.

To view the error log:
1. In the Maintenance Menu, select the Error Log item; then press the Enter/Check button.
2. The Error Log screen will be displayed. The most recent error will be at the top.
3. Use the up and down arrow buttons to view any errors that are not shown on the screen.
4. Pressing the Exit/X button will return you to the Maintenance Menu screen.
5. If the screen remains dormant for more than 30 seconds, you will be returned to the Maintenance Menu screen.

Clear Errors

This feature allows the user to clear the error log.

To clear the error log:
1. In the Maintenance Menu, select the Clear Errors item; then press and hold the Enter/Check button.
2. The following confirmation screen will be displayed: “**Clear Error Log?”**
3. If ‘Exit’ is chosen, you will be returned to the Maintenance Menu screen.
4. If ‘Enter’ is chosen, then the error log is cleared and a message is displayed: **“Error Log Cleared”**; you will be returned to the Maintenance Menu screen.

Scale Units

- This feature allows the user to lock and/or unlock the unit of weight measurement as well as select the default scale units (lb or kg).
- When the Scale Units menu item is selected, the unit of measure will be locked and the current unit of measure will be displayed.
- When cancel/exit is pressed, the menu will return to the Maintenance Menu Screen.
- The default setting is Unlocked.

To lock/unlock the Scale Units:
1. In the Maintenance Menu, select the Scale Units item; then press and hold the Enter/Check button.
2. The Scale Units Screen will display Figure 41 with the current state as the highlighted item.

Return To Table of Contents

Maintenance Menu (Continued)

3. Use the Up and Down Arrow buttons to highlight the desired units and identify whether you want them locked or unlocked.
4. Press and hold the Enter/Check button to select and save the new state.
5. The following screen message will be displayed: **"Save Successful"**.
6. The Scale Units screen will reappear after two seconds and the new setting will be highlighted.
7. Pressing the Exit/X button will return you to the Maintenance Menu screen without saving the new state.

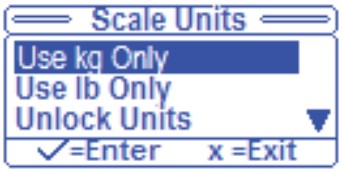

Figure 41

About Product

The display will indicate the current bed configuration including the bed type, bed options, serial number and the software versions for all software targets connected on the internal CAN network. For example, the menu will list out the bed configuration as follows:

```
Bed Information:
S3
–Zoom/Batt.
–Scale
–Bed Exit
  Zone Control
–Awareness
–Wireless

Serial Number:
080115000

CPU Board SW:
3006-308-905_A
v.1.1.001

Foot Board SW:
3006-501-905_A
v.1.1.001
```

To view this information:

1. In the Maintenance Menu, select the About item then press and hold the "Enter"/Check button.
2. The About Screen will be displayed.
3. Use the Up and Down Arrow buttons to scroll through the information if it does not fit on one screen.
4. Press the "Exit"/X button to return to the Maintenance Menu screen.
5. The Type information should indicate, depending on the options: **"Zoom", "Scale", "Bed Exit" (if Mulitzone, "Zone Control" will be printed under the "Bed Exit" text) and "Awareness".**

Return To Table of Contents

Maintenance Menu (Continued)

Connectivity Menu (*i*Bed® Wireless Option Only)

This feature allows the operator to view the iBed Wireless product information. This information includes the Connectivity Status, Signal Strength, IP and MAC addresses, Locator ID and its Connectivity Status and Battery Status. To view this information:

1. Press and hold the Enter/Check button while in the Maintenance Menu and the “Connectivity Info” element is selected.
2. The display should present the Connectivity Information Screen.
3. Use the Up and Down arrows to scroll through the information if it does not fit on one screen.
4. Press the Exit/X button to return to the maintenance menu.

WiFi Module Status possible states:
- Trying to Connect
- Connected
- Not Connected

WiFi Signal Strength possible states:
- None
- Low
- Good
- Excellent

***i*Bed Locator Status possible states:**
- Connected
- Mobile
- Trying to Connect
- Connection Time Out

***i*Bed Locator Battery possible states:**
- Low Battery
- Good

WiFi Module Info
Status:
Connected
Signal Strength:
Excellent
IP Address:
XXX.XXX.XXX.XXX

MAC Address:
XXXXXXXXXXXX
Software:
5212-300-905_F
v.1.3.018

iBed Locator Info
Status:
Connected
ID:
XXXXXXXXXXXX
Battery:
Good

IR Software:
5212-300-935_C
V.1.1.002

Return To Table of Contents

Maintenance Menu (Continued)

- The Connectivity Info. menu will only be shown once the “Wireless” option on the bed in the Bed Config menu is enabled.
- The Wifi Module Info and *i*Bed Locator Info text fields shall always be printed in the Connectivity Menu.
- For the “WiFi Module Info” section, once the Wireless heartbeat is detected, then the “Status:”, “Signal Strength:”, “IP Address:”, “MAC Address:” and “Software:” fields will be displayed. Otherwise, if the Wireless heartbeat is not detected, the “WiFi Module Info” section shall list the text “Not Available”.
- For the “*i*Bed Locator Info” section, once the IR heartbeat is detected, then the “Status:”and “IR Software:” fields will be displayed. Otherwise, if the IR heartbeat is not detected, the “*i*Bed Locator Info” section shall list the text “Not Available”.
- The ID and Battery sections shall only be displayed if the *i*Bed Locator Status is “Connected”.

Exit Menu

- This feature allows the operator to exit the menu back to the previous screen.
- When this menu item is selected the screen will exit to the “Status” screen.

Return To Table of Contents

Preventative Maintenance

Beds require an effective maintenance program, we recommend checking these items annually. Use this sheet for your records. Keep on file.

CHECKLIST

_____ All fasteners secure (reference all assembly drawings).
_____ Engage brake pedal and push on the bed to ensure all casters lock securely.
_____ Inspect the brake assembly (Brake Ratchet Spring and Brake Bar) for degradation or signs of wear at the foot end and head end of the bed. Ensure brake assembly components (locking caster and springs) are functioning properly.
_____ "Brake" LED on the footboard and head end siderails blink when brakes are not engaged.
_____ Locking steer caster engages and disengages properly.
_____ Siderails move, latch and stow properly.
_____ CPR release working properly.
_____ Foot prop intact and working properly.
_____ I.V. pole working properly.
_____ Foley bag hooks intact.
_____ Optional CPR board not cracked or damaged and stores properly.
_____ No cracks or splits in head and footboards.
_____ No rips or cracks in mattress cover.
_____ All functions on head end siderails working properly (including LED's).
_____ All functions on footboard working properly (including LED's).
_____ Scale and Bed Exit system calibrated properly.
_____ Motion Interrupt switches working properly.
_____ Night light working properly.
_____ Power cord and plug not frayed or damaged.
_____ No cables worn or pinched.
_____ All electrical connections tight.
_____ All grounds secure to the frame.
_____ Ground impedance not more than 100 mΩ (milliohms).
_____ Current leakage not more than 300 µA (microamps).
_____ Apply grease to the Litter grease points and fowler motor clutch (page 31).
_____ Engage drive wheel and ensure it is operating properly (Zoom® option).
_____ Motion release switches working properly (Zoom® option).
_____ Confirm Head End Control Panel functionality (Zoom® / Battery Backup option).
_____ Confirm battery powered functionality (Zoom® / Battery Backup option).
_____ Ensure ground chains are clean, intact, and have at least two links touching the floor.
_____ Check Fowler angle for accuracy 0^0 - 60^0.
_____ Siderail switches working properly (*i*Bed® Awareness option).
_____ Center Light Bar LED and side light LED working properly (*i*Bed® Awareness option).
_____ Inspect footboard control labeling for signs of degradation.
_____ Inspect siderail gas spring for oil leaks and replace if necessary.
_____ Check fowler motor flexible mounting for damage or wear.
_____ Check all motion functionality.
_____ Ensure power cord slack at the inlet filter (Zoom and Battery Backup Option).
_____ Check Nurse Call functionality.
_____ Check Nurse Call battery - optional equipment
_____ Check labels, as specified in the Operations and Maintenance manuals to ensure legibility, proper adherence and integrity.
_____ Confirm *i*Bed® Wireless Module and IR Module are intact and footboard icons are displaying (*i*Bed® Wireless Option)

Bed Serial Number:		

Completed by: _____ Date: _____

Return To Table of Contents

GREASE POINTS

1. H/E Glide Rod
2. Ball Screw
3. Brake Spring

Siderail Assembly (Reference p/n: 3006-400-105 (Head End) and 3006-400-300 (Foot End)

1. Apply Syn-Tech NS-18191-G grease (p/n 3000-200-700) to Glide Rod surface.

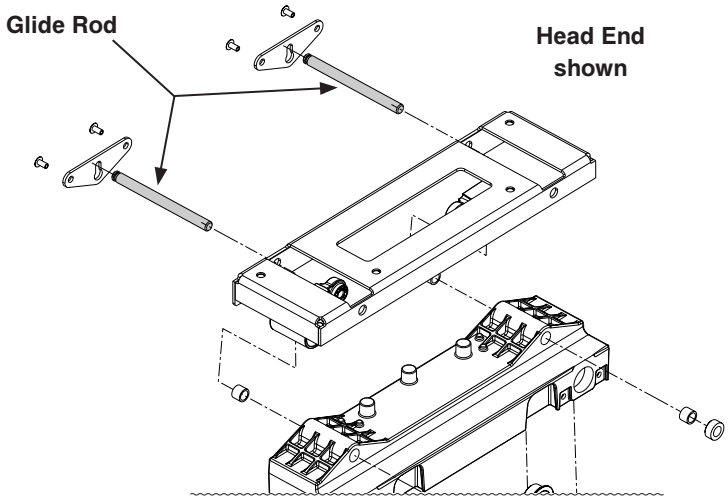

Fowler Drive Assembly (Reference p/n: 3006-300-550)

1. Apply Mobile #28 grease to the entire length of the ball screw.
2. If dry, apply a thin film layer of Syn-Tech grease (p/n 3000-200-700) to the outside of the brake spring.

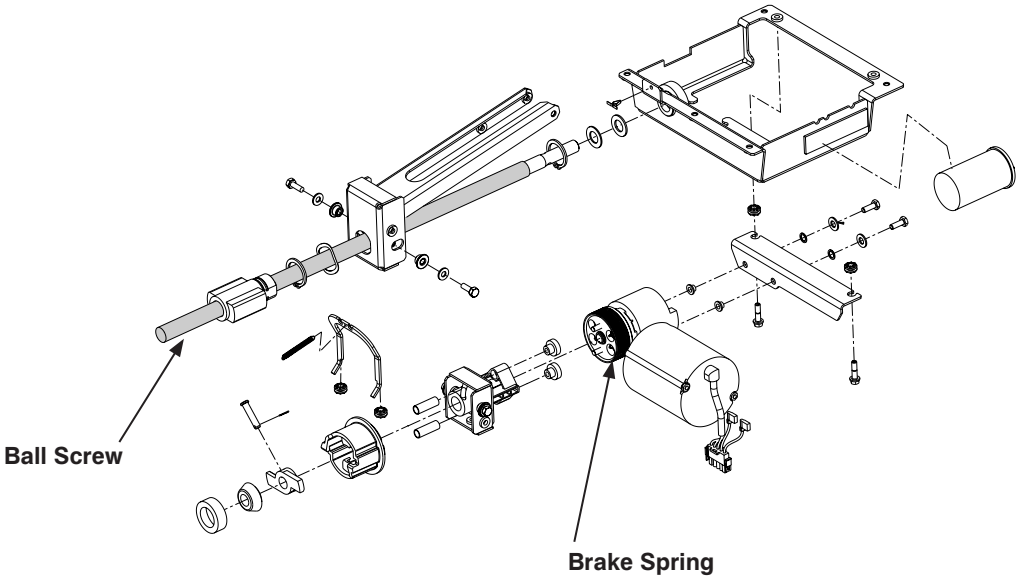

Return To Table of Contents

Product Labels

Note: All product labels are standard on the bed unless otherwise noted as being optional.

Part Name/Number	Product Label
Specification Label 3006-300-625	stryker® IPX4 REF 3002 S3 SN Serial No. Date of Mfg. 115V~ 60 Hz, 8 A 500 lbs. [227 Kg.] WARNING: Does not tolerate machine washing or jet wash! Portage, MI 49002 Made in U.S.A. This product is protected by the following U.S. patents, and other patents pending: US 5094418 US 5187824 US 5325551 US 5343561 US 5172442 US 5276432 US 5329657 CLASSIFIED UL C US 87VL MEDICAL ELECTRICAL EQUIPMENT UL 2601-1
Shock Hazard 3006-002-708	CAUTION: No user serviceable part inside. To reduce the risk of electric shock, do not remove cover. Refer servicing to qualified service personnel.
Steer Lock 3006-090-013	OFF STEER ON
Base Logo 3006-200-602	stryker
Caution/Danger Label 5212-100-807	**CAUTION:** Adequate grounding reliability can only be achieved when the equipment is connected to an equivalent receptacle marked "Hospital Grade." **DANGER:** Explosion hazard. Do not use in the presence of flammable anesthetics. **DANGER:** Risque d'Explosion ne pas employer en presence d'Anesthesiques inflammables. **EXPLOSIONSGEFAHR!** Nicht in der naehe von feuergeraehrlichen AnasthesiemittenIn verwenden.

Return To Table of Contents

Product Labels

Note: All product labels are standard on the bed unless otherwise noted as being optional.

Part Name/Number	Product Label
Caution 3006-088-820	CAUTION: Possible fire hazard. When using half bed length-type oxygen administering equipment insure that siderails are outside of the tent.
500 lb Max 3006-090-100	MAX. 500 LB ○ 227 KG
Cord Out Label 3006-090-028	NOTE: TO PREVENT A LOW BATTERY CONDITION: WHEN BED IS NOT PLUGGED IN, POSITION THE CORD OUT SWITCH TO THE OFF POSITION.
Brake Pedal 3006-200-601	BRAKE
Foley Bag Hook 3006-300-601	ISOLATED FOLEY BAG HOOK BELOW CAUTION: Isolated hook does not retract with bed frame.

Return To Table of Contents

Product Labels

Note: All product labels are standard on the bed unless otherwise noted as being optional.

Part Name/Number	Product Label
Fowler Elevation Angle 3006-300-602	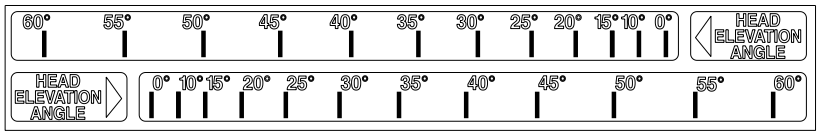
CPR Release 3006-300-603	
Release Handle 3006-400-657	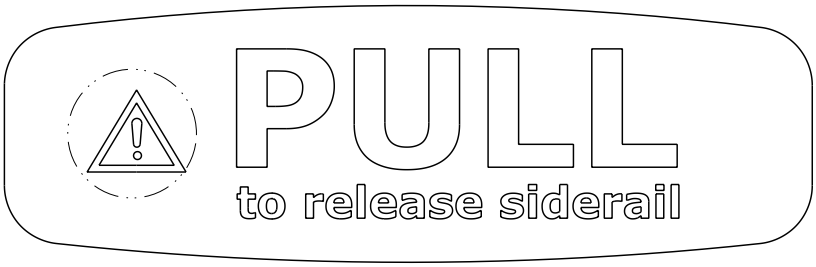
Warning 3006-400-656	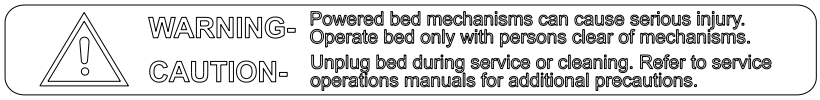
Oxygen Warning 3006-508-010	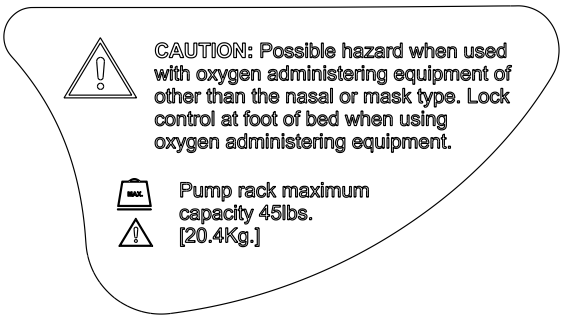

Return To Table of Contents

Product Labels

Note: All product labels are standard on the bed unless otherwise noted as being optional.

Part Name/Number	Product Label
For hospital staff use only 3006-508-013	For hospital staff use only
Stryker Logo 3006-508-014	stryker
Night Light 3006-310-601	NIGHT LIGHT BELOW ON OFF
Head End Inner Siderail (Left) 3006-400-620	
Head End Inner Siderail (Right) 3006-400-610	

Return To Table of Contents

Product Labels

Note: All product labels are standard on the bed unless otherwise noted as being optional.

Part Name/Number	Product Label
Head End Inner Siderail with NC (Left) 3006-400-621 (Optional)	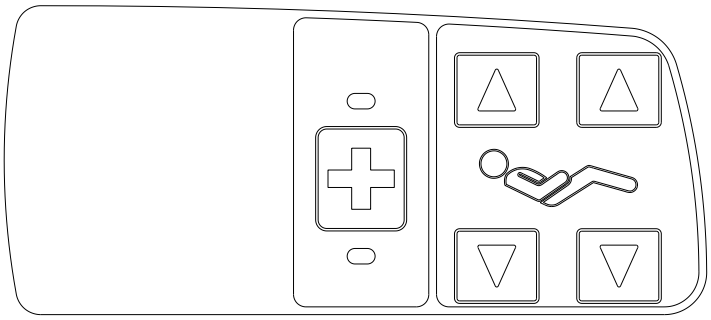
Head End Inner Siderail with NC (Right) 3006-400-611 (Optional)	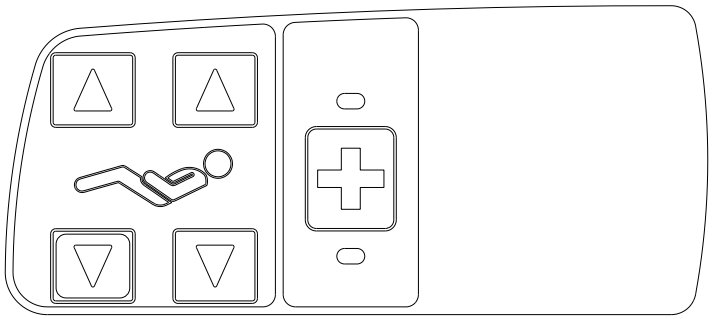
Head End Inner Siderail with Nurse Call and Lights (Left) 3006-400-625 (Optional)	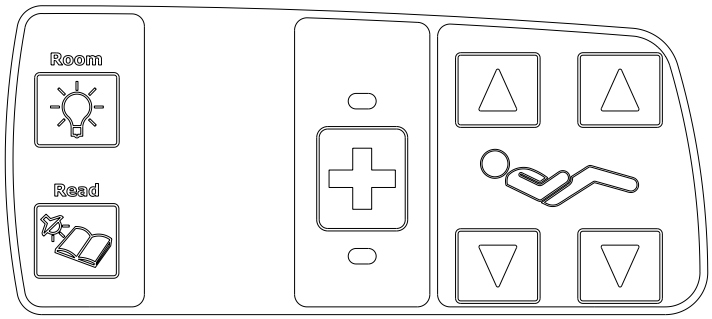
Head End Inner Siderail with Nurse Call and Lights (Right) 3006-400-615 (Optional)	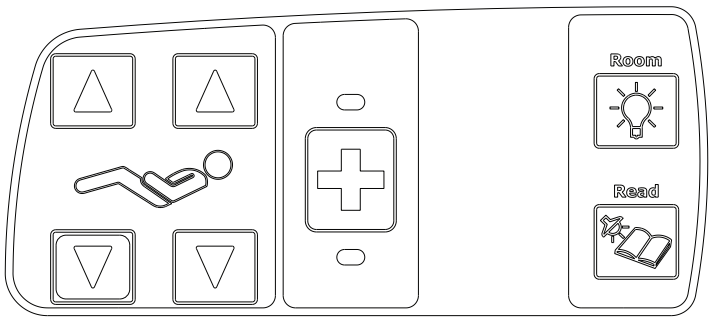
Head End Inner Siderail with Nurse Call, Lights and TV-Radio (Left) 3006-400-623 (Optional)	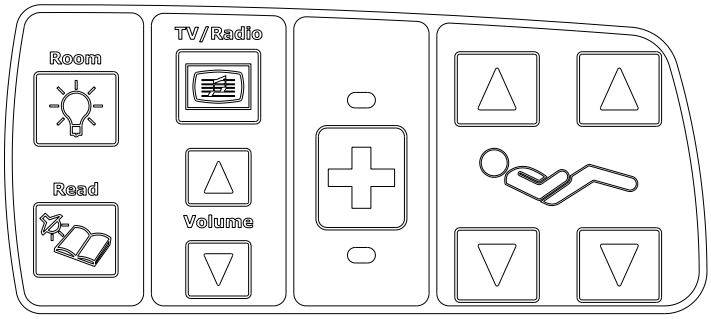

Return To Table of Contents

Product Labels

Note: All product labels are standard on the bed unless otherwise noted as being optional.

Part Name/Number	Product Label
Head End Inner Siderail with Nurse Call, Lights and TV-Radio (Right) 3006-400-613 (Optional)	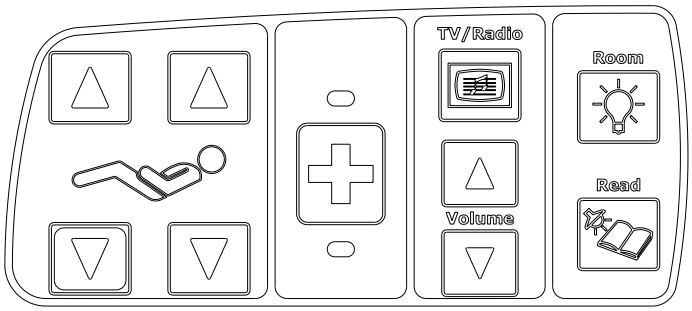
Head End Inner Siderail with Smart TV (Left) 3006-430-131 (Optional)	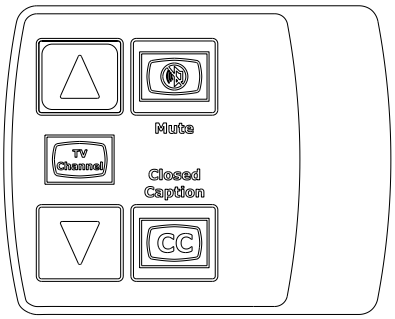
Head End Inner Siderail with Smart TV (Right) 3006-430-132 (Optional)	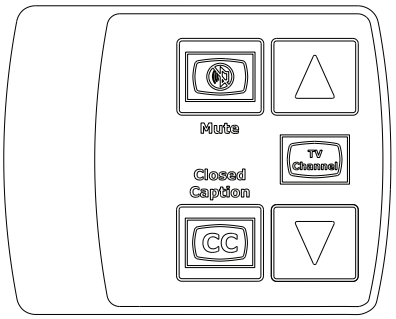
Head End Outer Siderail with Cardiac Chair (Left) 3006-400-637	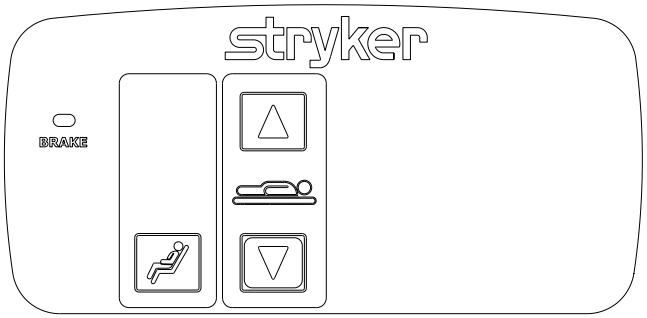
Head End Outer Siderail with Cardiac Chair (Right) 3006-400-647	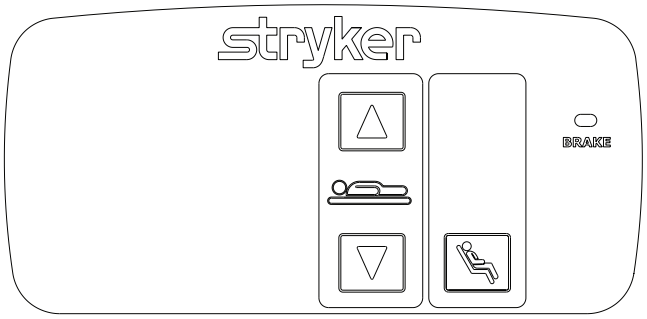

Return To Table of Contents

Product Labels

Note: All product labels are standard on the bed unless otherwise noted as being optional.

Part Name/Number	Product Label
Head End Outer Siderail with Cardiac Chair and Nurse Call (Left) 3006-400-635 (Optional)	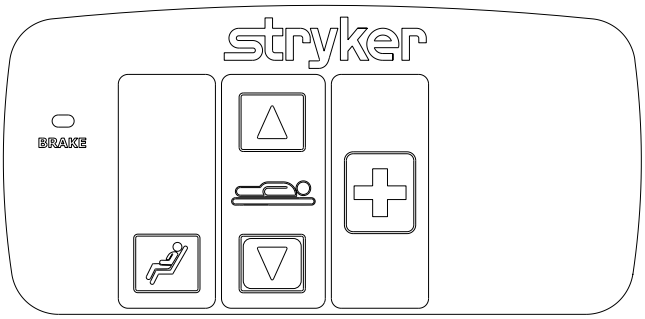
Head End Outer Siderail with Cardiac Chair and Nurse Call (Right) 3006-400-645 (Optional)	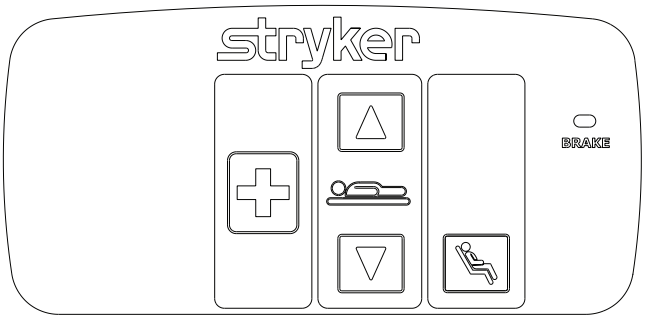
Head End Outer Siderail with Cardiac Chair and Gatch/Fowler (Left) 3006-400-634 (Optional)	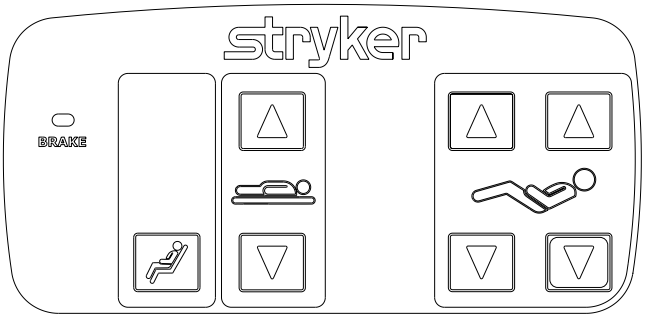
Head End Outer Siderail with Cardiac Chair and Gatch/Fowler (Right) 3006-400-644 (Optional)	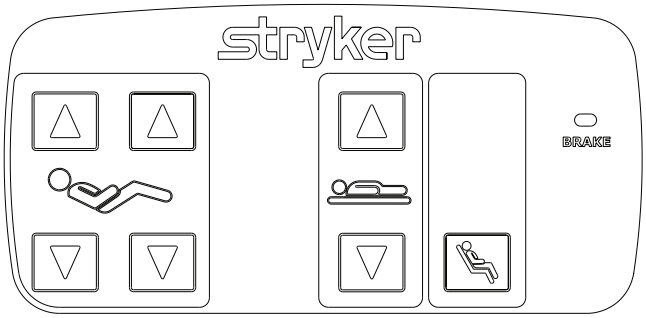
Head End Outer Siderail with Cardiac Chair, N/C and Gatch/Fowler (Left) 3006-400-633 (Optional)	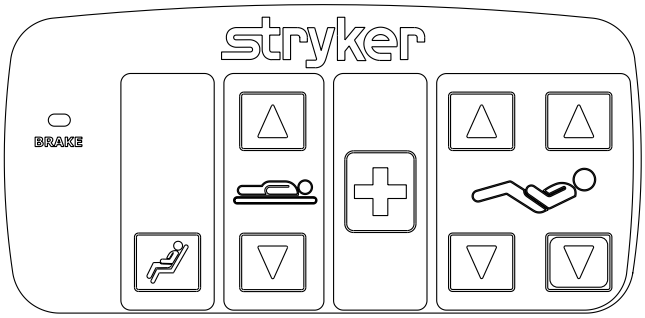

Return To Table of Contents

Product Labels

Note: All product labels are standard on the bed unless otherwise noted as being optional.

Part Name/Number	Product Label
Head End Outer Siderail with Cardiac Chair, N/C and Gatch/Fowler (Right) 3006-400-643 (Optional)	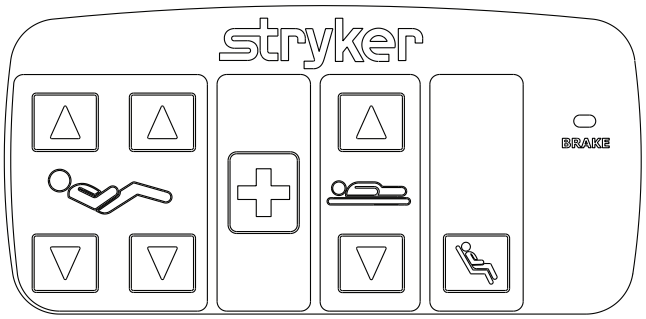
Footboard, without Scale and without Bed Exit 3006-508-004	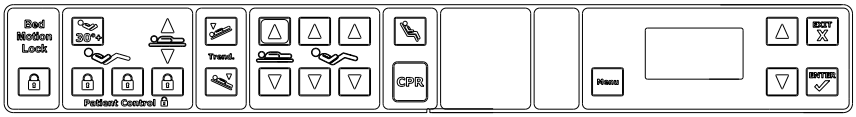
Footboard, with Bed Exit 3006-508-005 (Optional)	
Footboard, with Bed Exit and Scale 3006-508-007 (Optional)	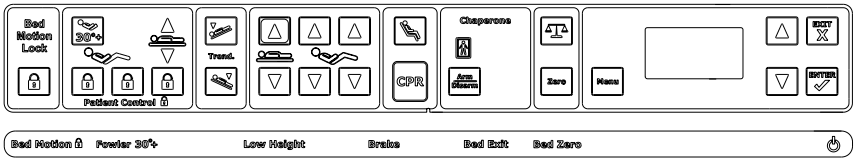
Footboard, with Bed Exit and Zone Control 3006-508-006 (Optional)	
Footboard, with Bed Exit, Scale and Zone Control 3006-508-009 (Optional)	
Bed Exit 3006-508-109 (Optional)	**Bed Exit** A. BEFORE putting a NEW PATIENT on the bed: 1. Prepare the bed for patient stay by adding linen and equipment to the bed. 2. Press and HOLD the '**ZERO**' key. Follow the instructions on the display. 3. The '**BED ZERO**' light will illuminate to indicate when the BED EXIT system is 'zeroed' and is ready for the patient to be helped to the bed. B. To ARM BED EXIT System: 1. Place patient on the bed. 2. Push the '**ARM / DISARM**' key and release. The '**BED EXIT**' light will illuminate. 3. Bed Exit system is now armed. NOTE: Adding or subtracting objects from the bed after zeroing the bed will cause a change in the sensitivity of the BED EXIT system.

Return To Table of Contents

Product Labels

Note: All product labels are standard on the bed unless otherwise noted as being optional.

Part Name/Number	Product Label
Bed Exit with Zone Control 3006-508-106 (Optional)	**Bed Exit With Zone Control** A. BEFORE putting a NEW PATIENT on the bed: 1. Prepare the bed for patient stay by adding linen and equipment to the bed. 2. Press and HOLD the '**ZERO**' key. Follow the instructions on the display. 3. The '**BED ZERO**' light will illuminate to indicate when the BED EXIT system is 'zeroed' and is ready for the patient to be helped to the bed. B. To ARM BED EXIT System: 1. Place patient on the bed. 2. Push the '**ARM / DISARM**' key and release. The '**BED EXIT**' light will illuminate. 3. Bed Exit with ZONE CONTROL will automatically select the first zone. To change the zone, press the '**ZONE**' key until the desired zone is illuminated. 4. Bed exit system is now armed. NOTE: Adding or subtracting objects from the bed after zeoring the bed will cause a change in the sensitivity of the BED EXIT system.
Scale System 3006-508-107 (Optional)	**Scale System** A. BEFORE putting a NEW PATIENT on the bed: 1. Prepare the bed for patient stay by adding linen and equipment to the bed. 2. Press and HOLD the '**ZERO**' key. Follow the instructions on the display. 3. The '**BED ZERO**' light will illuminate to indicate when the SCALE system is 'zeroed' and is ready for the patient to be helped to the bed. B. To USE the SCALE system display: 1. To display the weight; press, hold and release the '**SCALE**' key. The Scale display will read: 'WEIGHING... DO NOT TOUCH BED', then 'XXX.X LB' will be displayed. C. To change linen or equipment: 1. Press the '**MENU.**' key, select '**CHANGE EQUIPMENT**' from the menu in the display, and follow the instructions. NOTE: Adding or subtracting objects from the bed after the SCALE system has been zeroed will cause a change in weight reading. Use the CHANGE EQUIPMENT function when objects are required to be added or removed from the bed.
Awareness Status 3006-508-108 (Optional)	**Awareness Status** A. Awareness monitors the following: 1. Brake 2. Siderail position 3. Low height (optional) 4. Bed Exit (optional) 5. Fowler 30°+ (optional) B. BEFORE arming the Awareness system: 1. Make sure the brakes are set. 2. Configure the siderails as desired. 3. If low height is to be monitored, lower the bed completely. 4. If Bed Exit is to be monitored, arm the Bed Exit system. 5. If the Fowler 30°+ is to be monitored, turn the Fowler 30°+ on. C. To USE the Awareness system: 1. Enable the Awareness system by pressing the Awareness '**ON / OFF**' key. The Awareness indicator light on the footboard will turn green if the system is successfully enabled. 2. When the Awareness state has changed, the Awareness indicator light will flash amber and the '**BRAKE**', '**SIDERAIL**', '**LOW HEIGHT**', '**BED EXIT**', and / or '**FOWLER 30°+**' lights will flash. The Awareness display will also indicate what has changed.

Return To Table of Contents

Product Labels

Note: All product labels are standard on the bed unless otherwise noted as being optional.

Part Name/Number	Product Label
WiFi Capable 3006-508-105	Wi-Fi Capable
WiFi CPU Cover 3006-300-105	Wi-Fi Capable CPU P/N 3006-308-900 ONL Y

Return To Table of Contents

Cleaning

Hand wash all surfaces of the bed with warm water and mild detergent. Dry thoroughly. Do not steam clean or hose off the bed. Do not immerse any part of the bed. Some of the internal parts of the bed are electric and may be damaged by exposure to water.

Suggested cleaners for bed surfaces:

Quaternary Cleaners (active ingredients - ammonium chloride)
Phenolic Cleaners (active ingredient - o-phenylphenol)
Chlorinated Bleach Solution (5.25% - less than 1 part bleach to 100 parts water)

Avoid over saturation and ensure the product does not stay wet longer than the chemical manufacturer's guidelines for proper disinfecting.

CAUTION

Some cleaning products are corrosive in nature and may cause damage to the product if used improperly. If the products described above are used to clean Stryker patient care equipment, measures must be taken to ensure the beds are wiped with a damp cloth soaked in clean water and thoroughly dried following cleaning. Failure to properly rinse and dry the beds will leave a corrosive residue on the surface of the bed, possibly causing premature corrosion of critical components. Failure to follow the above directions when using these types of cleaners may void this product's warranty.

For mattress cleaning instructions, please see the tag on the mattress, or contact the mattress manufacturer.

Clean Velcro® **after each use**. Saturate Velcro® with disinfectant and allow disinfectant to evaporate. (Appropriate disinfectant for nylon Velcro® should be determined by the hospital.)

Return To Table of Contents

Note

See the “Bed Circuit Boards” section for an outline of bed PCB’s and voltage test points.

Problem / Failure	Recommended Action
No power to bed.	A. Verify the power cord connections at the wall and the bed. B. Check the circuit breakers under the Litter/Fowler section on the patient’s left side. If the circuit breaker is tripped, reset it by pushing in. C. Check for 120VAC at J1 on the power supply, Pin 1 and 2. D. Check for DC voltages on J2 (Pins 1, 2, 3 & 6) on power supply. See “Power Supply” in the Bed Circuit Boards section for power supply voltage test points. a. If voltage is present, check connector W on the CPU board and check for the same DC voltages. If OK, go to step E. b. If voltage is not present, unplug connector W on the CPU board and recheck for DC voltages at J2 on the power supply. 1. If voltages come back, re-connect cable W to the CPU board and go to step C. 2. If DC voltage does not come back, replace the power supply. a. Unplug all connectors except for F, FF, O, and W from the CPU board and recheck voltages on connector W. 1. If DC voltages come back, plug the cable connections back in until problem comes back, isolate the problem to a component or assembly. 2. If DC voltages do not come back, replace the CPU board. E. Check for 120VAC at connector O on the CPU board. a. If voltage is present, replace CPU board. F. If the CPU board has been replaced, reconfigure the bed by resetting the: Bed Type, Bed Options, Serial Number, Burn-in Limits (Fowler and Height) and calibrating the scale. G. Verify bed function and return to service.

Return To Table of Contents

Problem / Failure	Recommended Action
No bed down motion.	A. Enter diagnostics (see Scale System Diagnostics and Calibration section) and press bed down. a. If motion is not present, verify the two wire connection is present on connector Z. 1. Test bed down motion; if motion is present then go to step D. b. If motion is present, re-burn lift potentiometer limits (see Lift Potentiometer “Burn-In” Procedure). B. Check for 5VDC on TP 9 (HL) and TP 7 (FL); reference ground test point while pushing the bed down button. a. If 5VDC is present, go to step C. b. If 5VDC is not present, replace CPU board. C. Check for 120VAC power on connector N (HL) and G (FL), pin 1 white and pin 3 black, of the CPU board, while pressing bed motion up. a. If voltage is not present, replace CPU board. b. If voltage is present: 1. Verify the motors are running, if so, replace lift couplers. 2. If motors are not running, check voltage at motor connection. 3. If voltage is present at motor, check capacitors or motors. D. Verify bed function and return to service.
No bed up motion.	A. Enter diagnostics (see Scale System Diagnostics and Calibration section) and press bed up. a. If motion is not present, got to step B. b. If motion is present, re-burn lift potentiometer limits (see Lift Potentiometer “Burn-In” Procedure). B. Check for 5VDC on TP 10 (HL) anf TP 8 (FL) on the CPU board; reference ground test point while pushing the bed up button. d. If 5VDC is present, go to step C. e. If 5VDC is not present, replace CPU board. C. Check for 120VAC power on connector N (HL) and G (FL), pin 1 white and pin 6 red, of the CPU board while pressing bed motion up. a. If voltage is not present, replace CPU board. b. If voltage is present: 1. Verify the motors are running, if so, replace lift couplers. 2. If motors are not running, check voltage at motor connection. 3. If voltage is present at motor, check capacitors or motors. D. Verify bed function and return to service.

Return To Table of Contents

Problem / Failure	Recommended Action
No Gatch down motion.	A. Check for 5VDC on TP4 on the CPU board; reference ground test point while pushing the fowler down button. a. If 5VDC is present, go to step B. b. If 5VDC is not present, replace CPU board. B. Check for 120 VAC on connector GG, Pin 1 (white) and pin3 (red), of the CPU board while pressing Fowler down. a. If voltage is not present, replace the CPU board b. If 5VDC is present, check the capacitor and motor. C. Verify bed function and return to service.
No Gatch up motion.	A. Check for 5VDC on TP 3 on the CPU board; reference ground test point while pushing the fowler up button. a. If 5VDC is present, go to step B. b. If 5VDC is not present, replace CPU board. B. Check for 120VAC on connector GG, Pin 1 (white) and pin 2 (black), of the CPU board while pressing Fowler up. a. If voltage is not present, replace the CPU board b. If 5VDC is present, check the capacitor and motor. C. Verify bed function and return to service.
No Fowler up motion.	A. Check for 5VDC on TP 6 on the CPU board, reference ground test point while pushing the gatch up button. a. If 5VDC is present, go to step B. b. If 5VDC is not present, replace CPU board. B. Check for 120VAC on connector CC, pin 1 (black) and pin3 (white), of the CPU board while pressing gatch up. a. If voltage is not present, replace the CPU board b. If 5VDC is present, check the capacitor and motor. C. Verify bed function and return to service.
No Fowler down motion.	A. Check for 5VDC on TP 5 on the CPU board, reference ground test point while pushing the gatch down button. a. If 5VDC is present, go to step B. b. If 5VDC is not present, replace CPU board. B. Check for 120VAC power on connector CC, pin 2 (red) and pin 3 (white), of the CPU board while pressing gatch down. a. If voltage is not present, replace the CPU board. b. If 5VDC is present, check the capacitor and motor. C. Verify bed function and return to service.

Return To Table of Contents

Optional Zoom® Troubleshooting Guide

This section of the troubleshooting guide includes the Zoom® self-propelled drive and the battery backup functions. When using this guide, assume the bed is functioning properly when powered by the AC line cord with the exception of the battery charging components.

Problem/Failure	Possible Cause	Recommended Action
On/Off switch is in the On position but the power LED is Off and the bed does not function.	No DC voltage from the batteries.	A. Check the circuit breakers at the head end of the bed. B. Verify the battery voltage is greater than 24VDC. C. Check the battery fuse - replace if necessary (2040-001-802). D. Check the cable connections from the batteries to the display board. E. Check the On/Off switch and cabling.
On/Off switch is in the on position, the power LED is on but the bed does not function.	Display board is not functioning or is locking out all functions.	A. Check the safety switches on the drive bar. B. Verify the battery voltage is greater than 24VDC. C. Verify the display board is functioning (see note below). D. Check all cable connections on the display and power boards.
On/Off switch is in the on position, the power LED is on, the Zoom® drive works but the battery backup does not work.	The thermostat on the inverter/ charger board has tripped, indicating a temperature above 110˚ C (230˚ F).	A. Wait approximately three to five minutes to allow the inverter/changer board to cool down.
The Zoom® drive does not work - the bed does not drive - but all other functions are working.	Zoom® drive circuitry is not responding.	A. Verify the display board is functioning (see note below). B. Perform the “Zoom® Option Control Bar Potentiometer ‘Burn-In’ Procedure”. C. Check the control bar potentiometer. When the bar is centered, there should be 2.25VDC - 2.75VDC between pin 1 and pin 2 on header 1 on the display/ CPU board (see “Zoom® Option Display/CPU Board - 2040-031-900) D. Check all cable connections on the display and power boards. E. Verify the power board is functioning. F. Verify the drive wheel is functioning.
The Zoom® drive does work - the bed will drive - but all other bed functions are not working.	No AC power from the Zoom® base.	A. Check AC voltage coming out of the inverter. It should be 120VAC between pin 1 and pin 4 on head-er 5 on the AC crossover board (see page 52) B. Check all cable connections from the batteries to the converter. C. Check the AC crossover board.
The bed power cord is plugged in but the battery does not charge	The battery charger is not functioning.	A. Check the circuit breakers on the litter. B. Check the battery charger. C. Check all cable connections on the charger.

Note

The display board will display the state of battery charge when the bed is first powered using the On/Off switch:

Three LED’s flash = 66% - 100% charged

Two LED’s flash = 33% - 66% charged

One LED flashes = less than 33% charged

No LED’s flash = No significant charge remaining.

Return To Table of Contents

INVERTER, CHARGER, BATTERY & ZOOM®

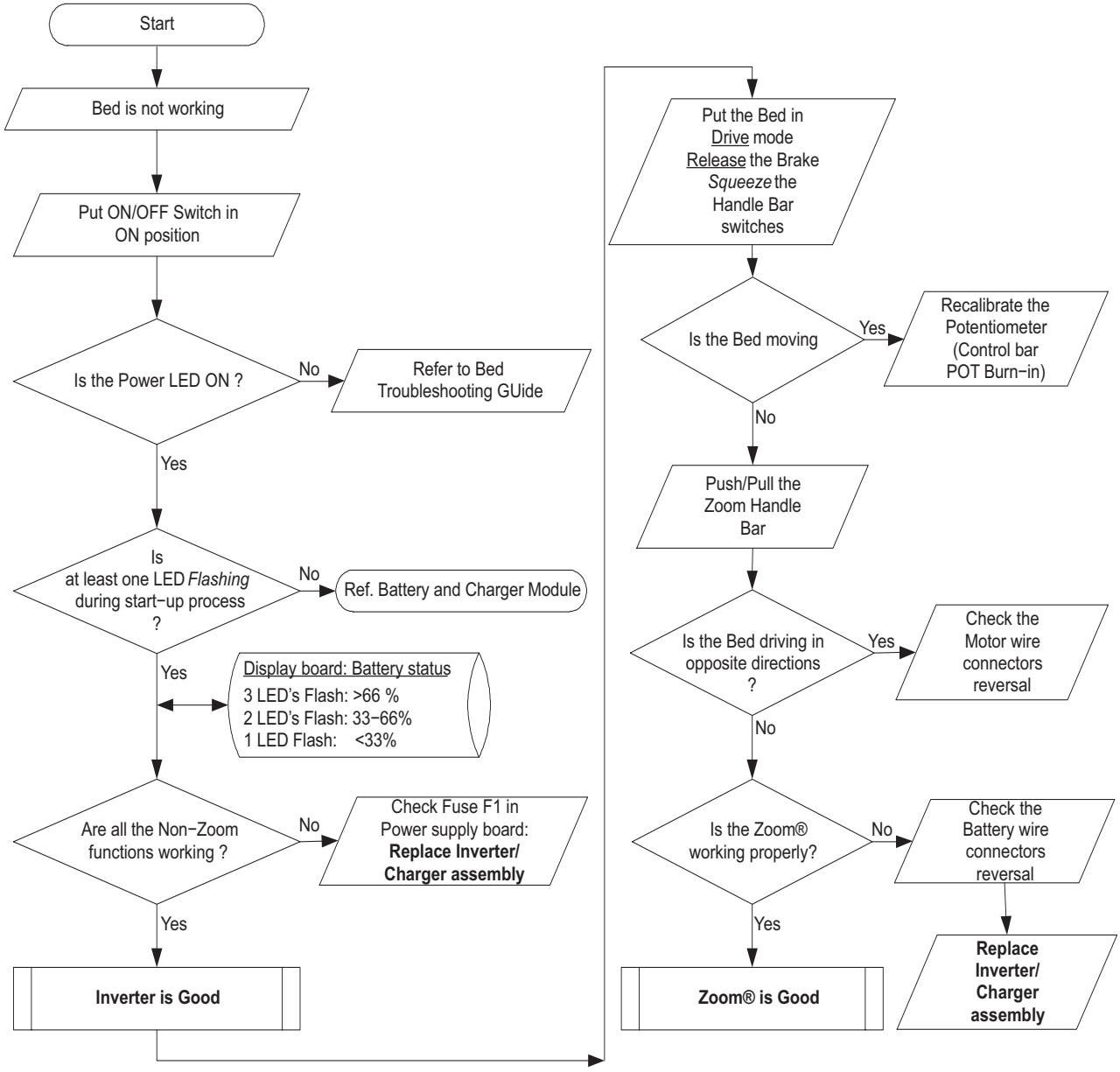

Return To Table of Contents

INVERTER, CHARGER, BATTERY & ZOOM® (CONTINUED)

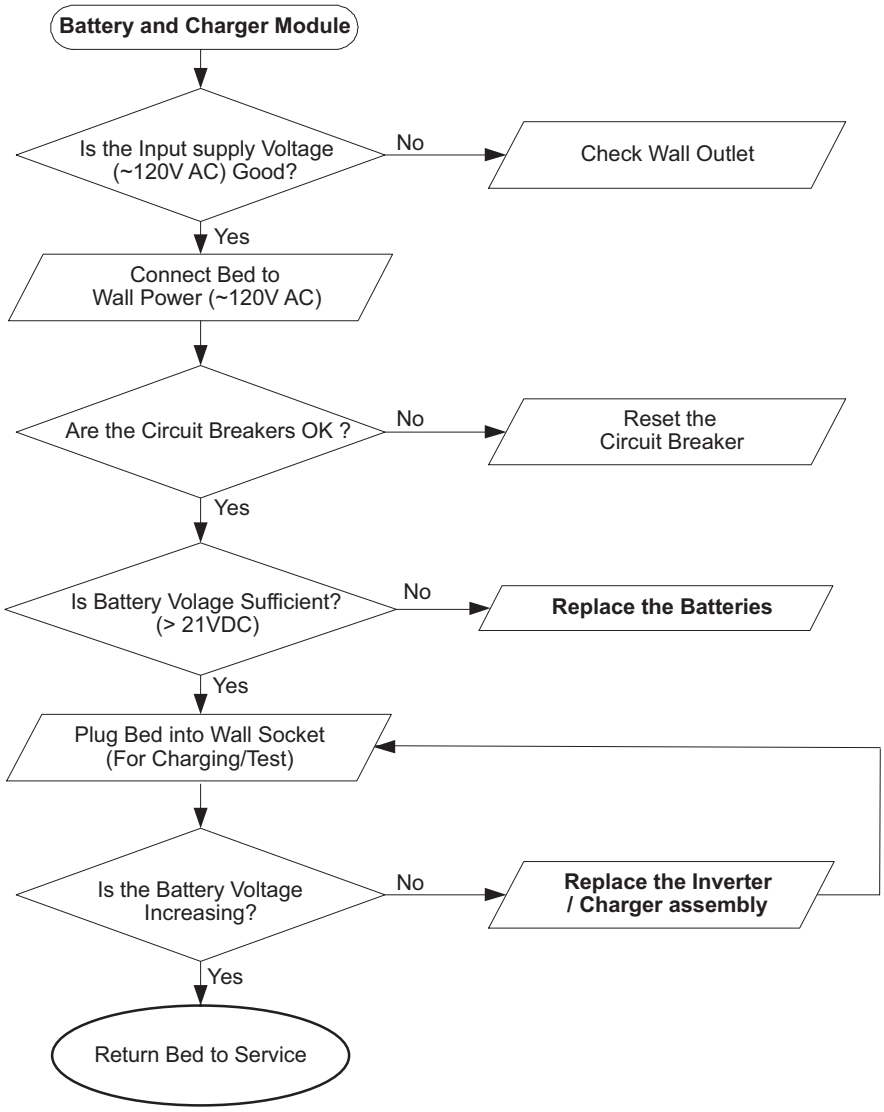

Return To Table of Contents

Optional *i*Bed® Wireless Troubleshooting

Problem / Failure	Recommended Action
No Connection to the Wireless Network	1. Unplug the bed from the wall outlet, then plug it back in and wait three minutes. a. If the footboard wireless icon shows connection to the wireless network, return the bed to service. b. If the footboard wireless icon does not show connection, go to step 2. 2. Look at the head end of the IR Module to verify if the status of the wireless LED. a. If the LED is solid troubleshoot the footboard by swapping it with a known working footboard. b. If the LED is flashing at a one second rate then move the bed to an area with better wireless coverage to see if it will connect to the wireless network. c. If the LED is flashing fast: i. Move the bed to an area with better wireless coverage to see if it will connect to the wireless network. ii. Work with IT to troubleshoot the wireless via the Stryker server application. Reference the *i*Bed® Wireless Server Manual 5212-009-001
No Connection to the *i*Bed Locator	1. Move the bed to another *i*Bed Locator to see if it connects. a. If it connects, replace the batteries in the original *i*Bed Locator. Reference the *i*Bed® Wireless *i*Bed Locator Manual 521-009-101 b. If it does not connect, look at the head end of the IR Module to verify the status of the *i*Bed Locator connection LED. i. If it is flashing, move the bed to another locator to test if it connects. ii. If it is not lit, check the IR Module cable connection B in the bed.

Return To Table of Contents

*i*Bed® Awareness System Error Codes

ERROR HANDLING

- The error handling system provides a mechanism for capturing errors known to the product and providing feedback to the operator through logged errors or message errors.
- All Logged errors generate a generic blinking error message which will be displayed on the status screen in the lower area: “Error XXX Call Service”, where XXX is the error code.
- Errors will only be logged if the error log does not already contain the error.
- In the event multiple errors are displayed on the status screen, the error code is used to identify the priority. The lowest code has the highest priority.
- All logged errors and message errors are persistent until the power is cycled or the condition is fixed.
- The details for each logged error and error message are detailed in the table below.

LOGGED ERRORS

Error Code	Name	Description	Type	Affected Systems
000	Not Used	High Priority Exceptions		
090	Brake Switch Error	This error is checked while the product is “On.” If one of the two brake wires is disconnected or shorted to 5V then the exception message is shown immediately or upon a change in the brake state. This error shall persist on the display until both the power is cycled and the error condition has been fixed.	Logged	Brake
100	Not Used	Highest Priority Errors		
102	StuckSafetyRelay	This error is checked while the product is “On”. If the safety relay signal is “On” and there is no button pressed on the product then set this error after 1 minute.” Note: This should not be checked when in Auto-Cycle Mode.	Logged	Motion
103	InputTimer	If any footboard motion or side rail/pendant input is sensed to be “On” continuously for a total of 5 minutes then provide an exception message. Note: This should not be checked when in Auto-Cycle Mode.	Logged	Motion
200	Not Used	Scale System		
201	HL-Load Cell	Patient Head Left Load Cell. Under/Over range.	Logged	Scale, Bed Exit, *i*Bed® Awareness
202	HR-Load Cell	Patient Head Right Load Cell. Under/Over range.	Logged	Scale, Bed Exit, *i*Bed® Awareness
203	FL-Load Cell	Patient Foot Left Load Cell. Under/Over range.	Logged	Scale, Bed Exit, *i*Bed® Awareness
204	FR-Load Cell	Patient Foot Right Load Cell. Under/Over range.	Logged	Scale, Bed Exit, *i*Bed® Awareness
206	CS5533Fatal	Non-Recoverable Communication Error. CS5533 Fatal occurs when the CPU fails to communicate to the External ADC for the Load cells and cannot recover.	Logged	Scale, Bed Exit, *i*Bed® Awareness
207	ZeroFail	Zero Fail error occurs when the system cannot provide a stable zero value for three consecutive attempts at zeroing the product.	Logged	Scale, Bed Exit, *i*Bed® Awareness
300	Not Used	Side Rails		
301	HLSRSwitch	Head Left Side Rail Switch General.	Logged	*i*Bed® Awareness

Return To Table of Contents

LOGGED ERRORS (CONTINUED)

Error Code	Name	Description	Type	Affected Systems
302	HRSRSwitch	Head Right Side Rail Switch General.	Logged	*i*Bed® Awareness
303	FLSRSwitch	Foot Left Side Rail Swtich General.	Logged	*i*Bed® Awareness
304	FRSRSwtich	Foot Right Side Rail Switch General.	Logged	*i*Bed® Awareness
400	Not Used	Memory System		
401	EEPROM	EEPROM Memory Corruption Any detected non recoverable memory failure will produce an error and localize the error to a section of memory.	Logged	
500	Not Used	Motion System		
600	Not Used	Wireless Connectivity System		N/A
601	Incompatible Footboard (*See **Note**)	This error occurs when a footboard placed on the bed is not 3006-501-900 rev A or later. This error shall flash in the lower section of the status screen and shall not prevent any product functionality from occurring.	Logged	
602	Network Connectivity Error	Wireless not on the network	Logged	
603	IP Conflict	Wireless not on the network	Logged	
604	IP Renew	Wireless not on the network	Logged	
605	WiFi Adapter	Wireless not on the network	Logged	
606	Schema Not Found	Schema file not found	Logged	
607	Schema Read	Schema file found, but there is a problem reading it	Logged	
608	Schema Property Mismatch	Property is part of the schema, but not available with Wireless	Logged	
700	Not Used	CAN Communication		N/A
701	CAN Communication Failed	After 3 attempts to communicate to the IR and Wireless, SDO transaction is deemed a failure and this error is set	Logged	

Note: Incompatible Footboard

If a non-Wireless footboard is installed on a Wireless bed:

- The bed will beep for six seconds on every power up.
- The footboard will display Error 601 (Footboard Incompatible).

- If trying to access the maintenance menu by holing down the **Enter** button on power up, it will not work.
    a. After powering up and once the Stryker splash screen has appeared, push and hold the **Enter** button.

- When in the maintenance menu, double item selections will appear. They cannot be selected.

To resolve the above issues, install the original Wireless footboard.

Return To Table of Contents

ERROR MESSAGES

Error Code	Name	Description	Type	Affected Systems
800	Not Used	Non-Logged Errors		
801	NurseCallBattery	When the nurse call battery falls below the 5v threshold a message will appear in the lower status window “N/C Battery Low”.	Non-Logged	N/A
803	FowlerCalibration	When the fowler calibration has not been completed then when in normal mode the message “Fowler Calib. Err” will be displayed in the lower status screen window.	Non-Logged	N/A
804	ScaleCalibration	Scale Calibration error occurs when the product in a normal operation mode and the scale system is present on the product but the scale system has not been calibrated. The message “Scale Calib. Err” will be displayed in the lower status screen window.	Non-Logged	N/A

NOTE: The 900 error codes are not logged.

Error Code	Name	Description	Type	Affected Systems
900	Not Used	Message Errors - When the timeout for the message error has expired the display should return to the status screen unless otherwise noted or unless a higher priority screen is being handled.		
901	ScaleSystem	When turning on the Scale system, using the Scale Button, if a “Logged” error is present that affects the scale system (see affected systems column) the message “Function Disabled - Call Service” will blink.	System	N/A
902	BedExitSystem	When turning on the Bed Exit system if a “Logged” error is present that affects the scale or bed exit systems (see affected systems column) the message “Function Disabled - Call Service” will blink. Bed Exit will alarm if Bed Exit is armed and a 200 level exception occurs. The message will be displayed “Turn off Bed Exit - Call Service”. When the system is disarmed, the display will go back to the status screen. Since the bed exit alarm has the highest priority, if the Bed Exit alarm is tripped due to the error condition this message will not be seen.	Message	N/A

Return To Table of Contents

ERROR MESSAGES (CONTINUED)

Error Code	Name	Description	Type	Affected Systems
903	LBSSystem	When turning on the *i*Bed® Awareness system if a "Logged" error is present that affects the *i*Bed® Awareness system (see affected systems column) the message "Function Disabled - Call Service" will blink. *i*Bed® Awareness will alarm if *i*Bed® Awareness is "On" and a 200 or 300 level Logged error occurs. The message will be displayed "Turn off Awareness - Call Service", When the system is turned off, the display will go back to the status screen.	Message	N/A
904	UnknownBedType	Unknown bed type occurs when the configuration switch bank does not contain a value that is recognized by the software. This will cause the product to stop all function and product a message screen indicating the error number and the message "Unknown Bed Type - Call Service"	Message	N/A
905	CANConnectivity	If the footboard does not see the Main board Heart beat within 10 seconds then the message "Communication Failed - Call Service"	Message	N/A
906	ScaleFeatures	A message will be displayed when user tries to activate any scale function (Ex. Gain/Loss, Change Equipment...) that is disabled due to a logged scale exception (200 Series). Message "Function Disabled - Call Service" at 0.8 Hz (70% Duty Cycle) for 4 seconds.	Message	N/A
907	ZeroAttemptFailed	The "Unable to Zero - Try Again" message will flash be displayed when the user tries to zero the bed and the scale system cannot stabilize the weight in time. Note: This applies to any use of the zeroing feature, even if that is within another scale function. If a zero attempt has failed then the scale system will be suspended until a successful zero is saved or the power is cycled. If the scale button is pressed the "Function Not Available - Zero Bed" message will flash.	Message	N/A
910	LoadCellCheck	The load cells will be checked when the maintenance menu is entered and a message will be displayed if any load cell errors are detected. The message should be displayed "Load Cell Error – HL HR FL FR". Note: Only the load cells that are in error will be displayed. This message will be persistent until any of the menu type buttons are pressed.	Message	N/A
911	MenuException	If the footboard menu system is provided with data that is out of range the display will present "Menu Error – Call Service". The message will persist until a menu state is correct.	Message	N/A
912	CalibrationException	If the scale calibration routine fails then the message "Calibration Error" will be displayed for 4 seconds and then return to the maintenance menu.	Message	Motion

Return To Table of Contents

Quick Reference Replacement Parts List

Note

The parts and accessories listed on this page are all currently available for purchase. Some of the parts identified on the assembly drawing parts in this manual may not be individually available for purchase. Please call Stryker Customer Service USA: 1-800-327-0770 for availability and pricing.

Part Name	Part Number
Electrical Components	
Footboard Keyboard (S/R Lights, Lockouts, etc.)	3006-501-011
CPU Board	3006-308-900
Power Supply	0059-157-000
Siderail Board, Inside	3006-400-930
Siderail Board, Outside	3006-400-910
Siderail Speaker with Cable	3000-403-831
Night Light Circuit Board	3002-310-900
Wireless Module	5212-300-012
IR Module	5212-300-053
Other Components	
Beeper Kit, Bed Exit, Low Sounding	3002-700-029
Beeper Kit, Bed Exit, High Sounding	3002-700-030
Capacitor, Fowler	0059-785-000
Capacitor, Gatch	0059-783-000
Capacitor, Lift	0059-786-000
Caster, 6”	3001-200-060
Caster, Steer, 6”	3001-200-050
Coil Cord, Lift Power	3001-200-824
Coil Cord, Lift Sensor	3006-200-815
Coil Cord, Litter Power	3001-300-844
Coil Cord, Litter Signal	3006-300-808
Fowler Brake Kit	3001-300-775
Load Cell	3002-307-057

Return To Table of Contents

Quick Reference Replacement Parts List

Part Name	Part Number
Other Components (Continued)	
Motor Coupler Kit, Lift	3000-200-725
Motor, Fowler with Clutch	3006-300-705
Motor, Gatch	3003-016-602
Motor, Lift (Same for Head and Foot End)	3003-016-603
Paint, Touch-Up, Bottle with Brush	7000-001-321
Paint, Touch-Up, Spray Can	7000-001-318
Potentiometer, Foot End	3001-200-230
Potentiometer, Head End	3006-200-240
Power Cord	3002-700-049
Single Tube of Grease	3000-200-700
Head/Footboard “C” Bumper Adhesive	0072-002-071
Fowler Pentiometer	3001-345-807
Zoom® Option Components	
Drive Potentiometer with Cable	2040-031-804
Drive Wheel Motor	3002-001-072
On/Off Switch	0059-191-000
Transformer	3002-001-010
Zoom® Inverter/Charger Board	3002-001-030
Zoom® Display/CPU Board	2040-031-910
Zoom® AC Crossover Board	2040-031-900

Return To Table of Contents

BRAKE PEDAL REPLACEMENT

TOOLS REQUIRED:

- 5/16” Hex Allen Wrench
- Torque Wrench
- Bungee Cords
- Loctite 242
- Hammer
- Punch
- #2 Phillips Screwdriver

PROCEDURE:

1. Raise the bed to the full upright position.
2. Remove the two uni-pan cover clips (A) holding the uni-pans together.
3. Unplug the bed power cord from the wall socket.
4. Using a #2 Phillips screwdriver, remove the three screws holding both the head end and the foot end upper lift covers. If desired, hold the covers out of the way by using bungee cords (or the equivalent) to secure them to the litter top.
5. Using a 5/16” hex Allen wrench, remove the two bolts holding the brake pedal to the brake rod on the side which needs to be changed.
6. Using a hammer and punch, remove the roll pins holding the brake shaft crank to the brake rod on both the head and the foot end.
7. Push the brake rod through the frame until the brake pedal is clear. Remove the brake pedal.
8. Reverse the above steps to attach the new brake pedal.

Note

Use Loctite 242 when reinstalling the bolts and torque the bolts to 25 foot-pounds.

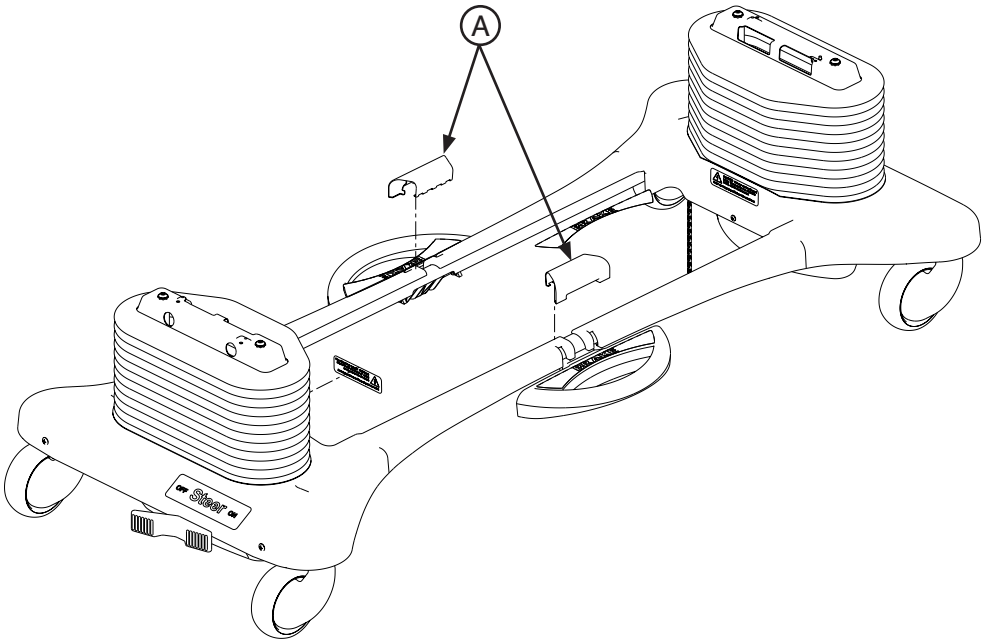

Return To Table of Contents

LIFT MOTOR AND CAPACITOR REMOVAL AND REPLACEMENT

TOOLS REQUIRED:

- 3/8” Socket Wrench w/Extension
- 5/16” Socket Wrench
- Floor Jack
- Side Cutters
- 7/16” Open End Wrench
- 2x4 (or Equivalent)

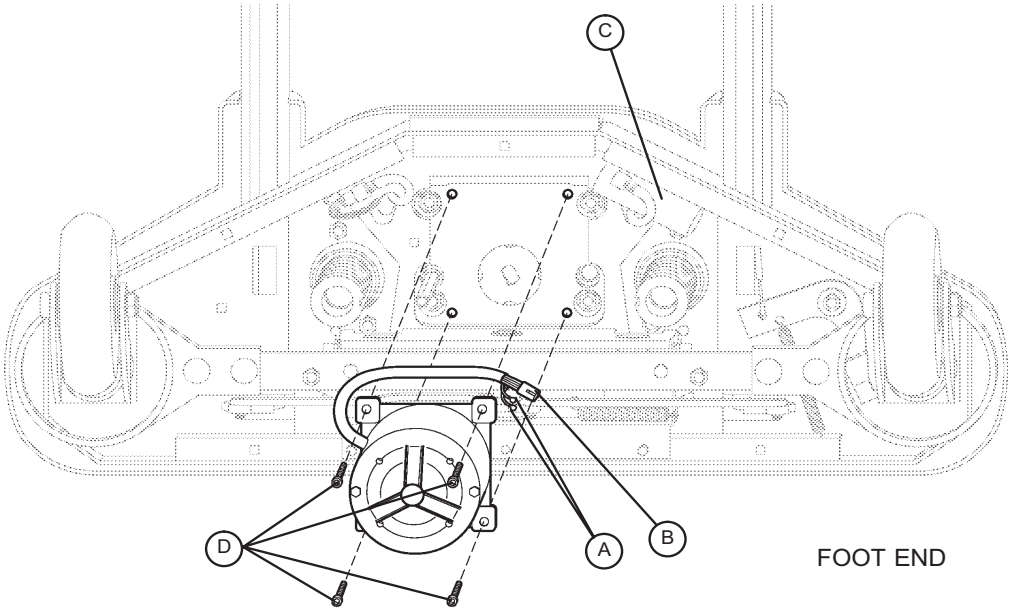

PROCEDURE:

Note

If you need more space to work under the base frame, place a 2 x 4 across the base frame rails and use a floor jack to raise the base frame off the floor.

1. Unplug the bed power cord from the wall socket. Using a 5/16” socket wrench, remove the five bolts holding the lower lift cover to the base and remove the cover.
2. Disconnect the two connectors (A) at the motor capacitor.
3. Disconnect the white connector (B) from the power cord.
4. Using side cutters, cut the cable ties holding the capacitor (C) to the base and remove the capacitor.
5. Using a 3/8” socket wrench, remove the four screws (D) holding the motor assembly in the lift housing and remove the motor assembly.
6. Reverse the above steps to install the new motor.

Note

The drive shaft on the new motor probably will have to be turned to be aligned with the coupler. Use a 7/16” open end wrench to turn the drive shaft of the motor.

The procedure for lift motor and capacitor removal and replacement is the same for both ends of the bed.

Return To Table of Contents

LIFT HOUSING REMOVAL AND REPLACEMENT

TOOLS REQUIRED:

- #2 Phillips Screwdriver
- Bungee Cord (or equivalent)
- 5/16” Socket Wrench
- Side Cutters
- 9/16” Socket Wrench
- 5/16” Nut Driver
- 7/32” Hex Allen Socket Wrench
- Sawhorses (or equivalent)
- T27 Torx
- 3/8” Socket Wrench (with approximately 6” extension)

PROCEDURE:

1. Unplug the bed power cord from the wall socket.
2. Using a 5/16” socket wrench, remove the five bolts holding the lower lift cover to the base and remove the cover.
3. Remove the uni-pan cover clips.
4. Using a #2 Phillips screwdriver, remove the three screws holding the upper lift cover to the base.
5. If you are working on the foot end of the bed, use a T27 Torx to remove the screw holding the litter access panel to the litter.
6. Remove the lift motor and capacitor (refer to procedure “Lift Motor and Capacitor Removal and Replacement”).
7. Remove lift potentiometer (refer to procedure “Lift Potentiometer Replacement and Adjustment”).
8. Using a 5/16” socket wrench, remove the cable clamps holding the power and sensor coil cords on top of the lift housing assembly. Cut the cable ties and disconnect the coil cords from under the lift housing. The power and sensor coil cords are now free of the lift housing assembly. Drape them up out of the way.
9. Using a 7/32” hex Allen socket, remove the two screws (A) holding the lift screws to the header crossbar plate.

CAUTION

The bed litter retracts on rollers. Secure it to prevent it from rolling while the procedure is being done.

Return To Table of Contents

LIFT HOUSING REMOVAL AND REPLACEMENT (CONTINUED)

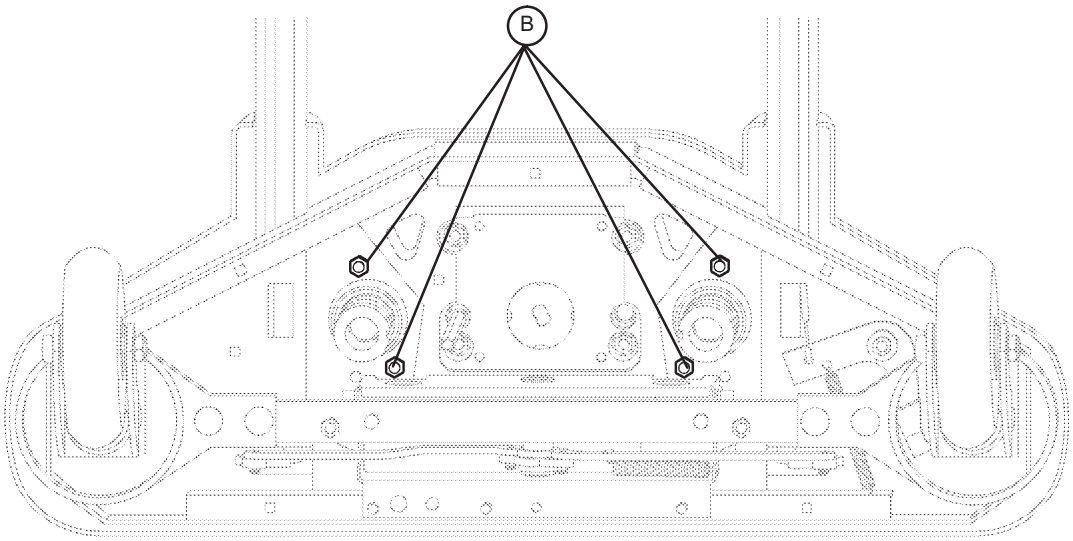

FOOT END – BOTTOM VIEW

9. Lift the litter top up and support it about 6” above the lift screws with sawhorses or the equivalent.
10. Under the base, using a 9/16” socket, remove the four nuts (B) holding the lift housing to the base.
11. Lift up and out on the lift housing assembly to remove it from the base.

CAUTION

See “Power and Sensor Coil Cord Replacement” section for proper reattachment procedure for power and sensor coil cords and “Lift Potentiometer Replacement and Adjustment” for reattachment of the lift potentiometer.

12. Reverse the above steps to reinstall the lift housing assembly after service is completed.

Note

The procedure for lift housing removal and replacement is the same for both ends of the bed.

Return To Table of Contents

LIFT POTENTIOMETER REPLACEMENT AND ADJUSTMENT

TOOLS REQUIRED:

- #2 Phillips Screwdriver
- Bungee Cord (or equivalent)
- 5/16” Socket Wrench
- 3/8” Open End Wrench
- Side Cutters

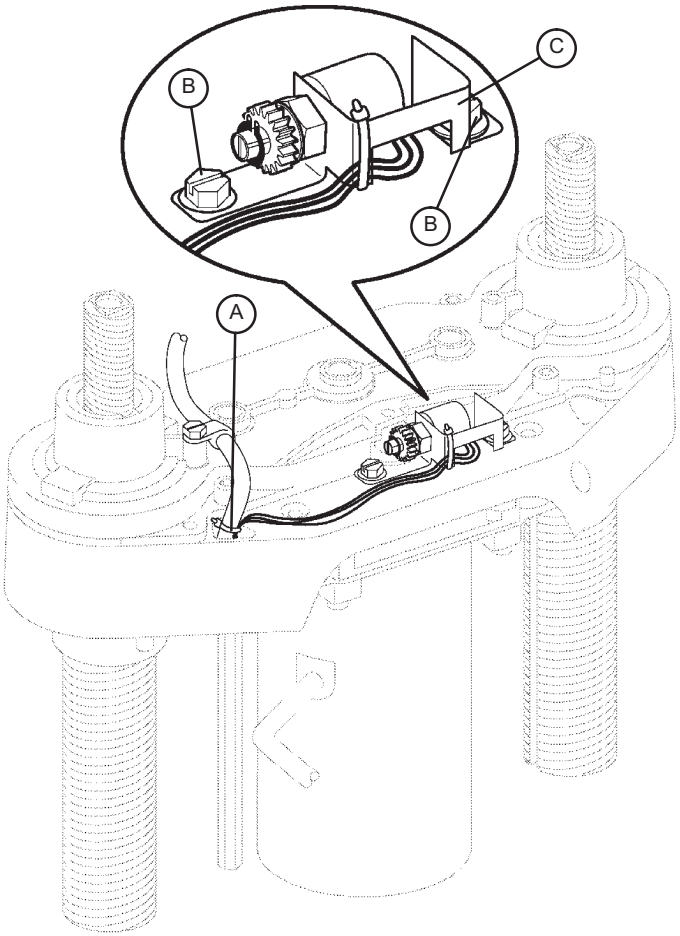

PROCEDURE:

1. Raise the bed to the full upright position.
2. Unplug the bed power cord from the wall socket.
3. Using a 5/16” socket wrench, remove the five bolts holding the lower lift cover to the base and remove the cover.
4. Using a #2 Phillips screwdriver, remove the three screws holding the upper lift cover to the base.
5. Remove the uni-pan cover clips.
6. Using side cutters, cut the cable tie (A) holding the potentiometer cable to the coil cord.
7. Unplug the potentiometer cable from the sensor coil cord. If replacing a potentiometer at the head end of the bed, unplug the cables attached to the brake sensor switch.
8. Pull the potentiometer cable up through the base.
9. Using a 3/8” open end wrench, remove the two bolts (B) holding the potentiometer housing (C) to the lift housing.
10. Lift up and out on the potentiometer housing assembly to remove it from the lift housing.
11. Before installing the new potentiometer on the bed, turn it clockwise until it stops. Turn it back counterclockwise two full (360) revolutions. This allows a “window” position for proper upper and lower limits.
10. Reverse steps 4-8 to install the new potentiometer and potentiometer housing assembly.
11. After installing the new potentiometer, the “burn-in” procedure below must be followed.

Note

Be sure to maintain the potentiometer position while installing.

Return To Table of Contents

LIFT POTENTIOMETER “BURN-IN” PROCEDURE

1. Unplug the bed power cord from the wall socket.
2. On the footboard control panel, hold down the Bed Motion Lock, Gatch Lock, and Reverse Trend buttons simultaneously. While still holding down the buttons, plug the power cord into the wall socket. Release the footboard button. Scroll down to the “Burn-In” menu item and press enter. Then select the “Burn-In Height” item. Based on the type of bed, a message will be displayed. This message will indicate to the user whether to run the bed all the way down or all the way up.
3. On a bed without the Zoom® power drive option, run both ends of the bed full down to a “hard stop”. On a bed with the Zoom® option, run both ends of the bed full up to a “hard stop”.
4. Hold down the Bed Motion Lock button until the light flashes.
5. Release the button and unplug the power cord from the wall socket.
6. Plug the power cord back in to the wall socket. Run the bed to full up, then full down to verify the bed limits.
7. The distance between the floor and the top of the litter seat section on a standard Secure bed (without a mattress) should be 16” - 16 3/8” with the litter fully down and 29 1/4” - 29 7/8” with the litter fully up.
   The distance between the floor and the top of the litter seat section on a Secure Zoom® bed (without a mattress) should be 19.5” with the litter fully down and 30” - 30 1/4” with the litter fully up. The distance between the floor and the top of the litter seat section on a Secure short bed with Zoom® (without a mattress) should be 20.5” with the litter fully down and 30” - 30 1/4” with the litter fully up.

Note

These values are for beds equipped with 6” casters.

WARNING

Ensure there is no patient on the bed while the burn-in procedure is being performed.

Return To Table of Contents

LIFT MOTOR ISOLATION PLATE REPLACEMENT

TOOLS REQUIRED:

- 7/16” Open End Wrench
- 5/16” Nut Driver or 5/16” Socket Wrench
- 3/8” Socket Wrench (with 6” ext.)

PROCEDURE:

1. Unplug the bed power cord from the wall socket.
2. Using a 5/16” socket wrench, remove the five bolts securing the lower lift cover and remove the cover.
3. Using a 3/8” socket with a 6” extension, remove the four bolts (C) holding the lift motor isolation plate to the lift housing and carefully lower the isolation plate to the floor.
4. Remove the motor coupler (A) and bushings (B).
5. Using a 3/8” socket, remove the bolts and washers (E) from the motor and remove the isolation plate (D).
6. Reverse the above steps to install the new isolation plate and reattach all components to the bed.

Note

When reinstalling the lift motor, the drive shaft on the motor will have to be turned to be aligned with the coupler. Use a 7/16” open end wrench to turn the drive shaft of the motor.

WARNING

Ensure there is no patient on the bed while the procedure is being performed.

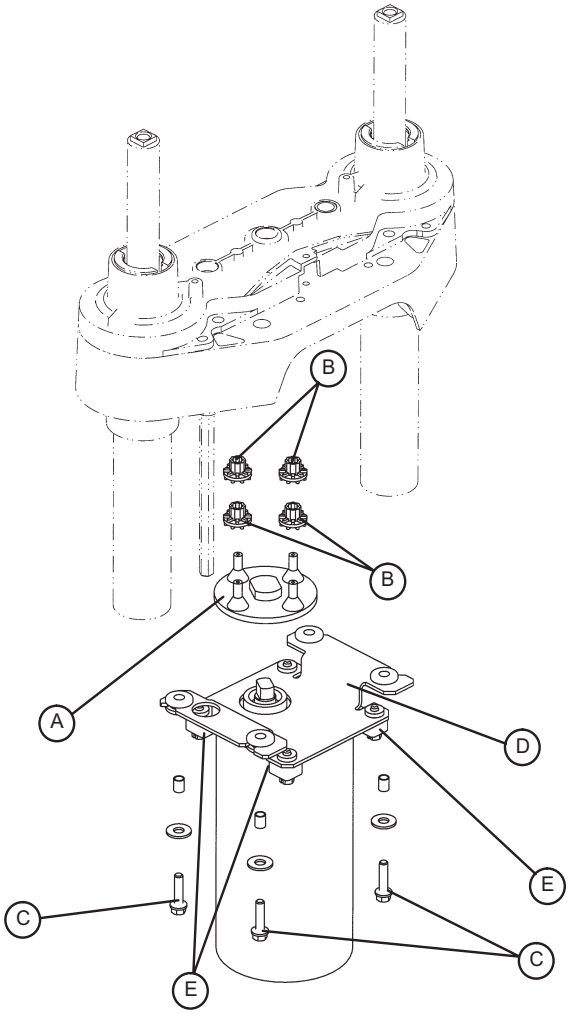

Return To Table of Contents

LIFT MOTOR COUPLER REPLACEMENT

TOOLS REQUIRED:

- 5/16” Socket Wrench
- 3/8” Socket Wrench (with 6” Extension)
- Floor Jack
- 2x4 (or equivalent)

PROCEDURE:

Note

If you need more space to work under the base frame, place a 2 x 4 across the base frame rails and use a floor jack to raise the base frame off the floor.

1. Unplug the bed power cord from the wall socket.
2. Using a 5/16” socket wrench, remove the five bolts holding the lower lift cover to the base and remove the cover.
3. Using a 3/8” socket with an extension, remove the four bolts (A) holding the isolation plate (B) to the lift housing and lower the lift motor and isolation plate assembly to allow access to the coupler (C).
4. The motor coupler can now be removed from the lift housing.
5. Reverse the above steps to install the new motor coupler and bushings.

WARNING

Ensure there is no patient on the bed while the replacement procedure is being performed.

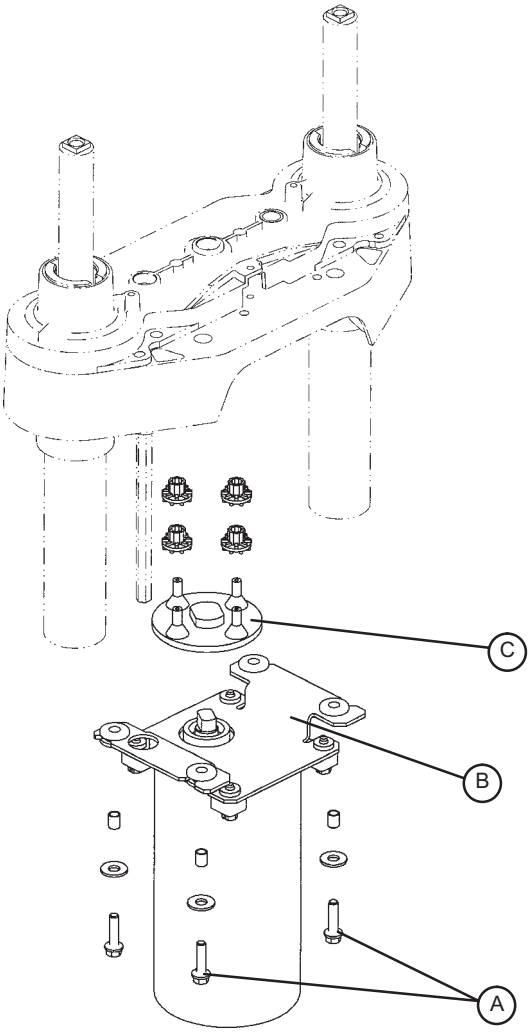

Return To Table of Contents

POWER AND SENSOR COIL CORD REPLACEMENT

TOOLS REQUIRED:

- #2 Phillips Screwdriver
- Side Cutters
- 5/16” Socket Wrench
- Bungee Cord (or equivalent)
- 5/16” Nut Driver
- Floor Jack
- 2x4 (or equivalent)

PROCEDURE:

Note

If you need more space to work under the base frame, place a 2 x 4 across the base frame rails and use a floor jack to raise the base frame off the floor.

1. Unplug the bed power cord from the wall socket.
2. Using a 5/16” socket wrench, remove the five bolts holding the lower lift cover to the base and remove the cover.
3. Using a #2 Phillips screwdriver, remove the three screws holding the upper lift cover to the base. If you want, hold the covers out of the way by using bungee cords (or the equivalent) to secure them to the litter top.
4. Using side cutters, cut the cable ties holding the power and sensor coil cords to the base. Remove the ground wire coming from the sensor cord that is attached to the base (note the star washer arrangement).
5. Disconnect the cables going to the motor and the lift potentiometer (at the head end, the sensor cord is also attached to the brake switch sensor).
6. Pull both cords up through the frame of the bed and the lift housing.
7. Using a 5/16” socket wrench, remove the two screws (A) holding the cable clamps* to the top of the lif housing.
8. Using a 5/16” socket wrench, remove the two screws (B) securing the cable clamps* to the underside of the header crossbar assembly.
9. Pull both coil cords up through the header crossbar assembly.
10. Disconnect the power and sensor coil cords from the connectors.
11. The cords should now be completely removed from the bed. Reverse the above steps to install the new power and sensor cords.*

CAUTION

* When replacing the power and sensor coil cords, secure the cable clamps to the cords at the first coil both on the top and on the bottom to ensure there is not too much slack in the cords between the top of the lift housing assembly and the bottom of the header crossbar. Be sure the clamps are fastened at exactly the correct angle, as shown by the arrows in the illustration. Arrange the cords exactly as shown in the illustration (left in front of right). **If this is not done correctly, damage to the cords will result.**

WARNING

Ensure there is no patient on the bed while the replacement procedure is being performed.

Return To Table of Contents

POWER AND SENSOR COIL CORD REPLACEMENT ILLUSTRATION

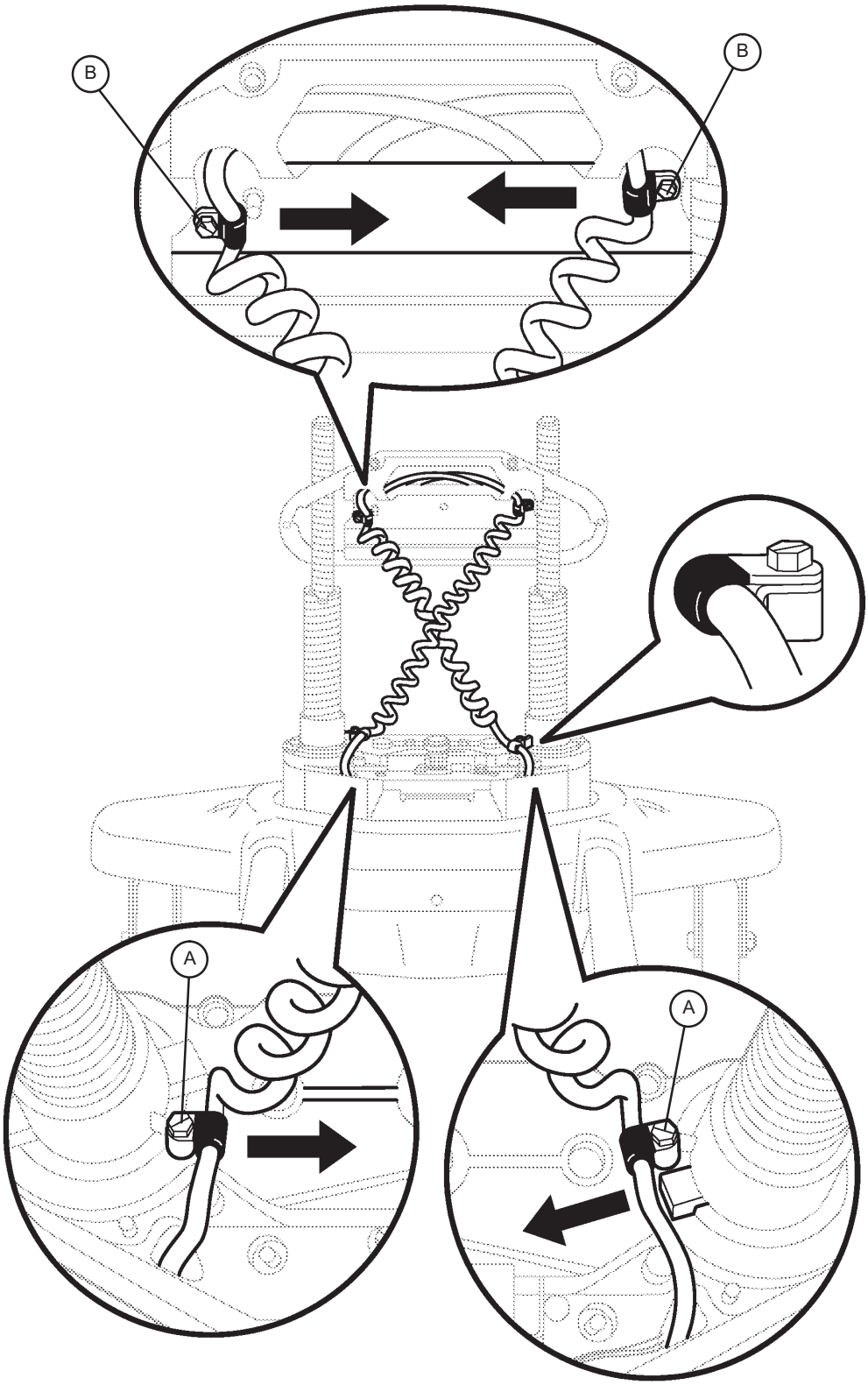

View from Center of Bed

Return To Table of Contents

KNEE MOTOR REMOVAL AND REPLACEMENT

TOOLS REQUIRED:

- T27 Torx
- Needle Nose Pliers
- 3/8” Socket Wrench
- Wire Cutters

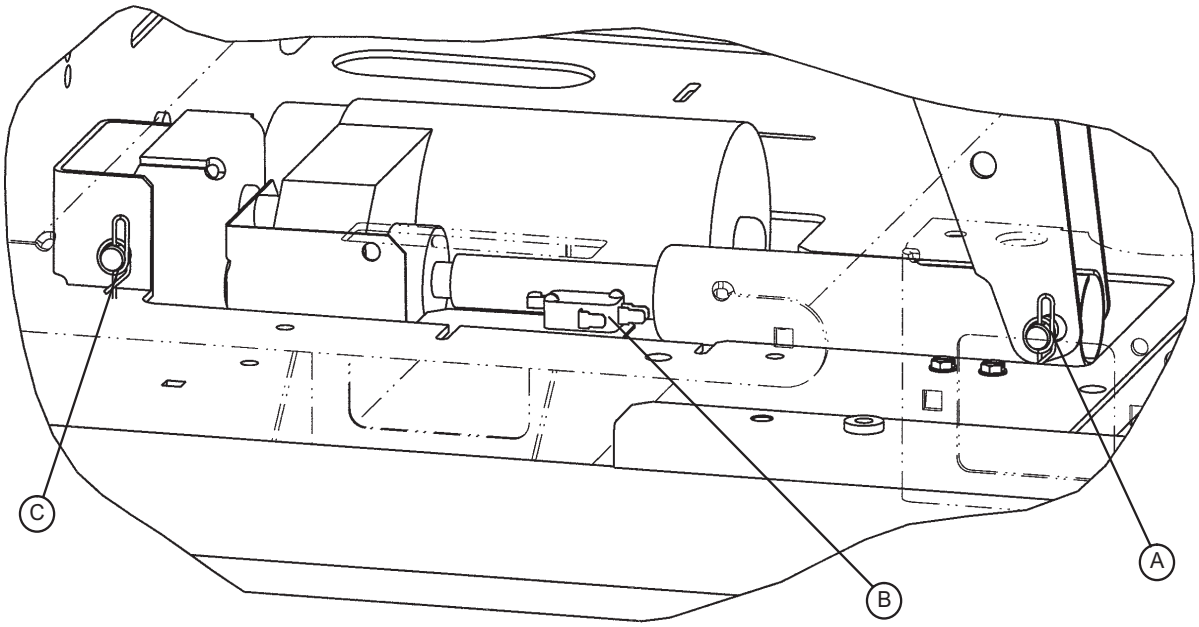

PROCEDURE:

1. Electrically run the litter fully up. Unplug the bed power cord from the wall receptacle.
2. Using a 3/8” socket wrench, remove the two bolts holding the motion interrupt pan to the litter frame and remove the pan.
3. Using needle nose pliers, remove the Rue pin (A) from the end of the drive tube.
4. Fold the Gatch section back toward the head end of the bed. Using a T27 Torx, remove the screw holding the mid-litter cover to the litter frame and remove the cover.
5. Remove the two wires from the auto contour micro switch (B) mounted next to the drive tube.
6. Using wire cutters, remove the cable ties. Disconnect the motor and capacitor wires.
7. Using needle nosed pliers, remove the Rue pin (C) from the motor bracket and lift the motor out.
8. Using a 3/8” socket wrench, remove the four bolts holding the motor bracket to the old motor. Remove the bracket and install it on the replacement motor using the same four bolts.
9. Install the replacement motor into the bed. Do not hook up the drive tube to the Gatch section yet.
10. Plug the bed power cord into a properly grounded wall receptacle. Using the button on the footboard or siderail, run the Gatch motor down until it stops.
11. Reinstall the mid-litter cover.
12. Fold the Gatch section back down. From underneath the bed, manually turn the drive tube in or out until it lines up with the hole in the Gatch section. Reinstall the pin, the wires for the auto contour switch, and the motion interrupt pan.
13. Test the bed for proper operation before returning it to service.

WARNING

Ensure there is no patient on the bed while the replacement procedure is being performed.

Return To Table of Contents

FOWLER MOTOR CAM AND CAM GUIDE REPLACEMENT

TOOLS REQUIRED:

- 5/16” Nut Driver
- 3/8” Socket Wrench
- T27 Torx

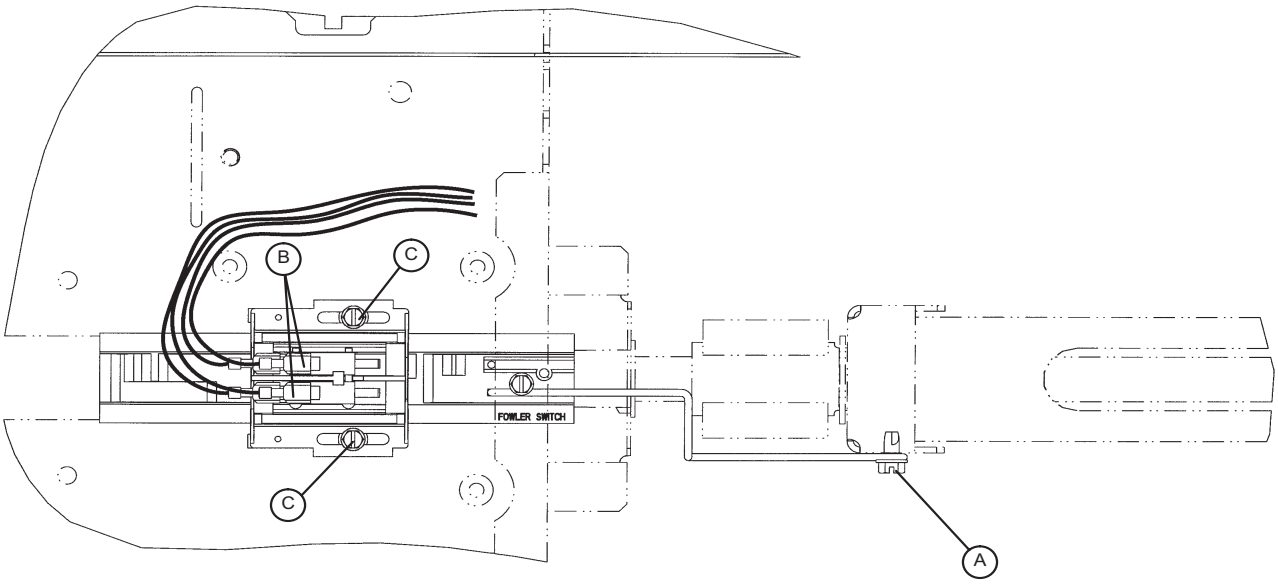

PROCEDURE:

1. Run the Knee Gatch fully up. Unplug the bed power cord from the wall socket.
2. Using a T27 Torx, remove the screw holding the foot end litter cover to the frame and remove the cover.
3. Using a 3/8” socket wrench, remove the two bolts holding the motion interrupt pan to the litter and remove the pan.
4. Using a 5/16” nut driver, remove the screw (A) holding the cam retention wire to the ball nut assembly.
5. Disconnect the cables (B) from the micro-switches. Take note of the locations of the cables so they will be connected properly to the replacement cam.
6. Using a 5/16” nut driver, remove the two screws (C) holding the cam and cam guide to the support bracket and remove the cam and cam guide with the attached micro-switches from the bed.
7. Reverse the above steps to install the replacement cam and cam guide/micro switch assembly.
8. Refer to “Limit Setting - Head Motor” section.

WARNING

Ensure there is no patient on the bed while the replacement procedure is being performed.

Return To Table of Contents

LIMIT SETTING - FOWLER MOTOR

TOOLS REQUIRED:

- 5/16” Nut Driver
- T27 Torx

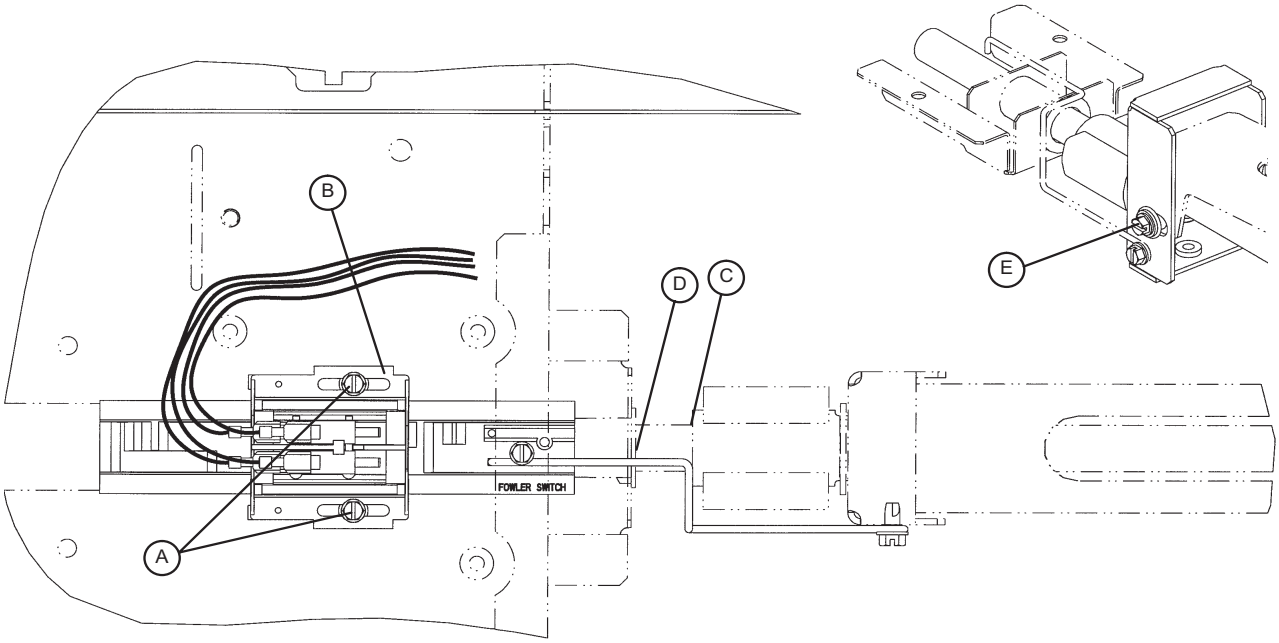

PROCEDURE:

1. Run the Knee Gatch fully up.
2. Using a T27 Torx, remove the screw holding the midsection litter access covers to the litter and remove the covers.
3. Run the head section down electrically until flat (0) or use the CPR release handle to fully lower the head.
4. Lightly tap the Fowler down button until the bolt and bushing (E) are centered in the slot.
5. Unplug the power cord from the wall socket.
6. Using a 5/16” nut driver, loosen the two screws (A) on the cam (B).
7. Slide the cam toward the head of the bed just until the micro-switch is activated (the switch will make a clicking noise).

Note

Check that the cam “bump” is on the “head” side of the switch actuator.

8. Tighten the two screws (A).

CAUTION

Be sure the head section stops when it is fully up and the ball nut bracket (C) is approximately 3/4” from panel (D). If not, damage to the unit could result.

9. Ensure the head section will lower to flat (0) before returning the bed to service. Verify the head section lowers onto the rubber rests and the motor stops running. Reinstall the litter access panels removed in step 1.

Return To Table of Contents

FOWLER MOTOR REMOVAL AND REPLACEMENT

TOOLS REQUIRED:

- 3/8” Socket
- 7/16” Socket
- 3/8” Drive Ratchet

PROCEDURE:

WARNING

The head motor is not grounded and may be an electrical hazard. Use caution when working around motors.

CAUTION

Ensure the fowler is lowered all the way down.

1. Using the CPR release, lower the Fowler to a flat (0 degrees) position.
2. Unplug the bed power cord from the wall socket.
3. Using a 3/8” socket, remove the two bolts at the foot end of the motion interrupt pan and remove the pan.
4. Using a 7/16” socket, remove the four bolts holding the motor bracket to the bed frame as shown. Remove the motor.

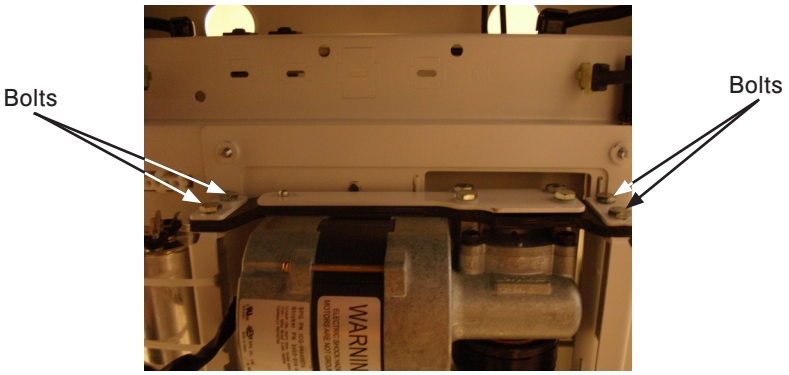

Note

Use caution when removing the motor to avoid having the coupler come off the ball screw shaft.

5. Unplug the head motor cables from the bed and capacitor.
6. Prior to installing the new motor assembly, apply a light coat of Syn-Tech grease (p/n 3000-200-700) to the brake spring.
7. Reverse the above steps to install the new motor assembly and reattach all litter panels.
8. Test the bed for proper operation before returning it to service.

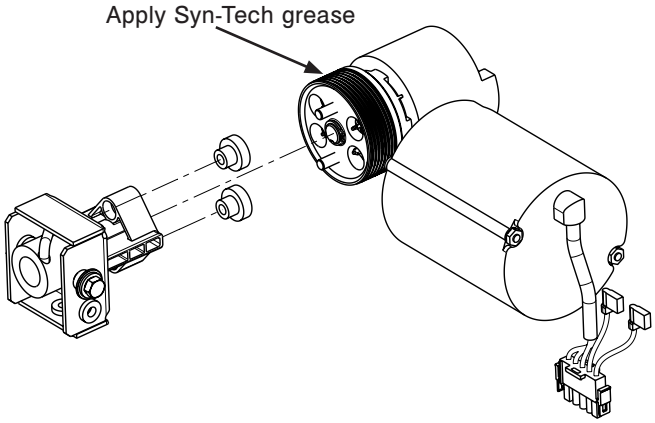

Return To Table of Contents

FOWLER MOTOR DRIVE ISOLATOR AND CPR DECOUPLER REMOVAL AND REPLACEMENT

TOOLS REQUIRED:

- 3/8” Socket Wrench
- Needle Nose Pliers

PROCEDURE:

1. Refer to the “Fowler Motor Removal and Replacement” procedure to access the isolator, springs and decoupler.
2. Pull the drive isolator (C) with the grommets (D), springs (B) and CPR decoupler (A) off the drive screw and remove it from the litter.
3. To reinstall, put the decoupler (A) on the shaft.
4. Using needle nose pliers, bend the end of the springs (B) out slightly to help hold the springs in the isolator. Put the springs in the isolator and install it on the shaft.
5. Reinstall the fowler motor (see “Fowler Motor Removal and Replacement” section).
6. Run the Fowler up and down several times to test it before returning the bed to service.

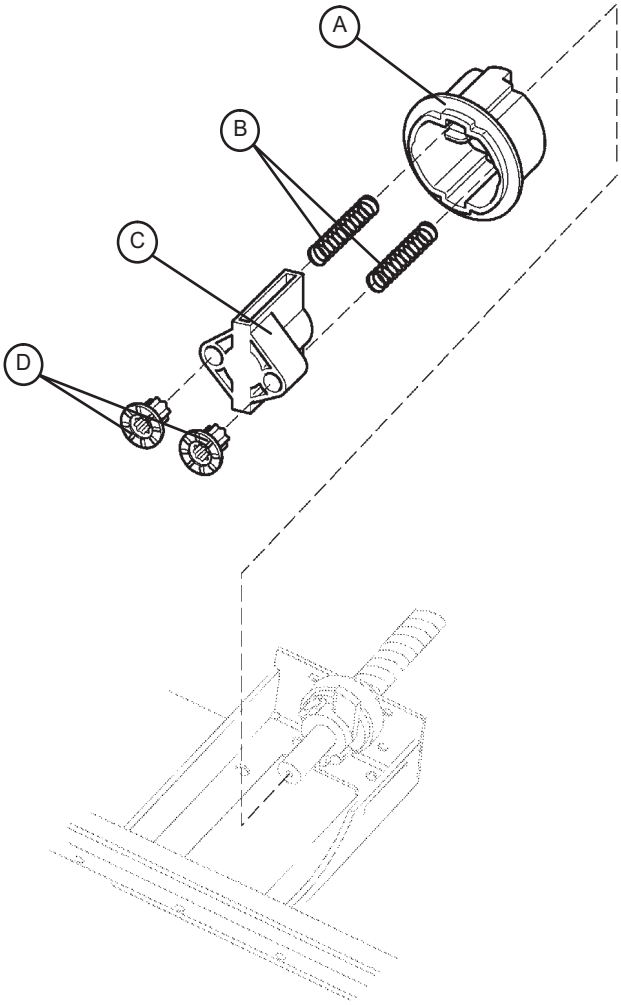

Return To Table of Contents

FOWLER MOTOR BALL SCREW ASSEMBLY REPLACEMENT

TOOLS REQUIRED:

- Large Snap-Ring Pliers
- 3/8” Socket
- 3/8” Ratchet
- Needle-Nose Pliers

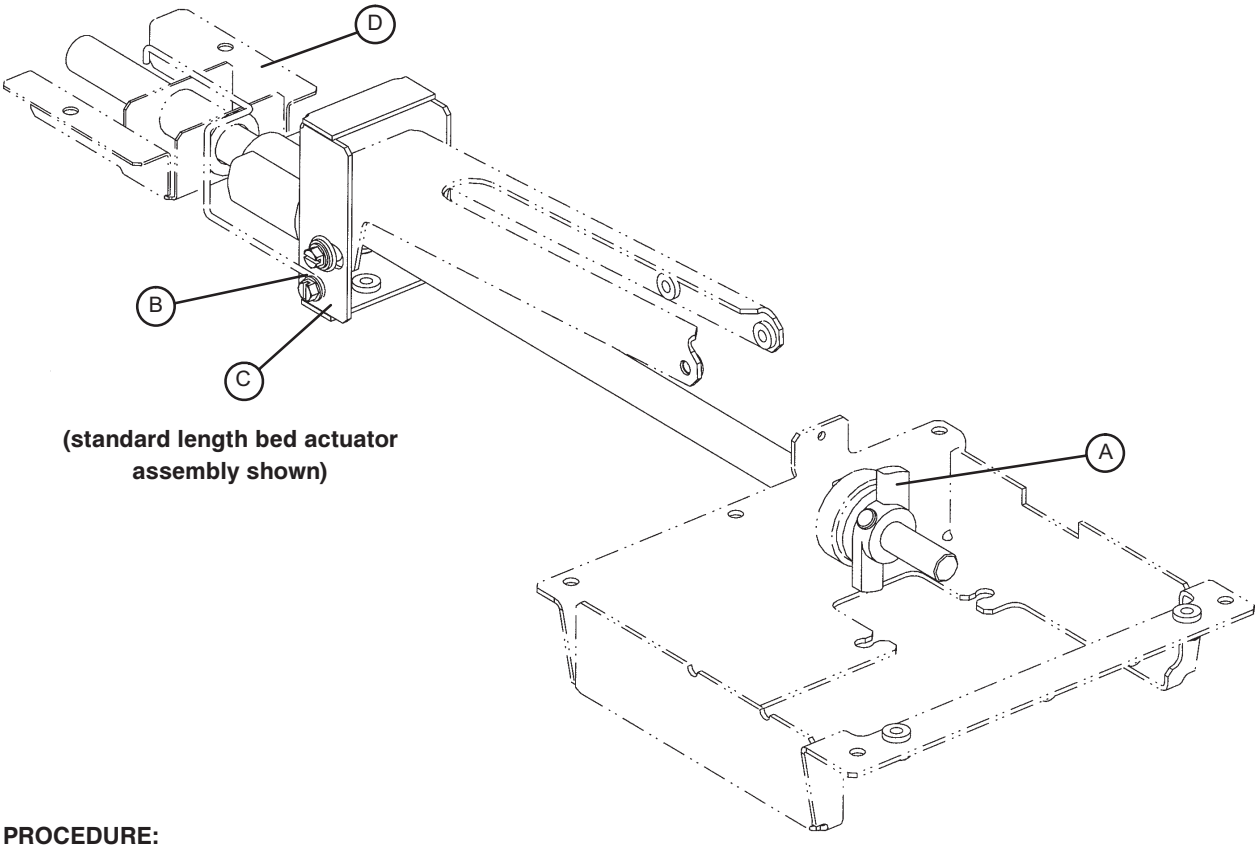

(standard length bed actuator assembly shown)

PROCEDURE:

1. Run the bed fully up. Unplug the bed power cord from the wall socket.
2. Using a 3/8” socket, remove the two bolts holding the motion interrupt pan to the litter and remove the pan.
3. Remove the fowler motor (see “Fowler Motor Removal and Replacement” section) for access to the ball screw assembly.
4. Remove the fowler motor drive isolator and CPR decoupler (see “Fowler Motor Drive Isolator and CPR Decoupler Removal and Replacement” section).
5. Using needle nose pliers, remove the cotter pin holding the clevis pin to the drive screw “wing” (A).
6. Remove the clevis pin and slide the wing and tapered roller bearing off the ball screw.
7. Using a 3/8” socket, underneath the litter, remove the screw holding the cam wire link (B) to the ball screw assembly.
8. Using a 3/8” socket, remove the two bolts holding the ball screw support bracket (D) to the bottom of the litter and remove the bracket.
9. Using large snap ring pliers, remove the snap ring holding the ball screw to the bracket (C).
10. To prevent the ball nut from coming off the drive screw, cable tie both ends of the ball screw.
11. Pull the ball screw toward the foot of the bed and remove the head end of the ball screw assembly from the support.

Return To Table of Contents

Fowler Motor Ball Screw Assembly Replacement (Continued)

Note

Do not allow the ball nut assembly to come off the drive screw. The ball nut will be shipped attached to the drive screw and retained in position during shipment. Remove the wire ties after installing the drive screw assembly.

12. Remove the thrust washers and bearing from the head end of the drive screw and set them aside.
13. Reverse the above steps to install the replacement ball screw assembly.

Note

Apply grease to all bearing areas.

CAUTION

Verify the fowler motor stops properly at both upper and lower electric limits. If it does not, refer to “Limit Setting - Fowler Motor”.

HEAD MOTOR BRAKE/CLUTCH REPLACEMENT

TOOLS REQUIRED:

- 3/8” Socket Wrench
- Snap Ring Pliers
- 9/16” Socket Wrench
- 9/16” Box End Wrench
- Wire Cutters

PROCEDURE:

1. Remove the fowler motor (see ”Fowler Motor Removal and Replacement” section).
2. Using snap ring pliers, remove the snap ring from the motor shaft.

CAUTION

The brake/clutch is spring-loaded. Use caution when removing the snap ring so the parts do not drop to the floor.

3. Remove the old brake/clutch from the motor and discard it.
4. Using a 9/16” socket wrench and a 9/16” box end wrench, remove the nut, bolt and washers from the new brake/clutch.
5. Install the new brake/clutch onto the motor. It may be necessary to turn the motor shaft to line up the key way with the brake/clutch.
6. Using the snap ring pliers, install the new snap ring.
7. Using the wire cutters, remove the four wire ties from the new brake/clutch.
8. Reinstall the fowler motor (see “Fowler Motor Removal and Replacement” section)
9. Test the bed for proper operation before returning it to service.

Return To Table of Contents

LOAD CELL REPLACEMENT

TOOLS REQUIRED:

- 1/4” Hex Allen Wrench
- Wire Cutters

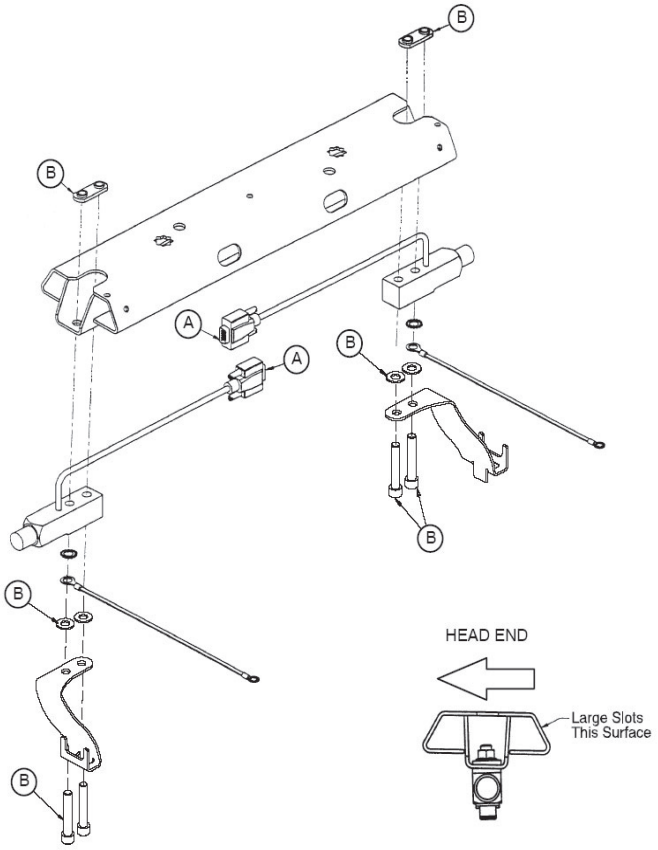

PROCEDURE:

1. Unplug the bed power cord from the wall socket.
2. Support the corner of the litter where the load cell is being removed.
3. Unplug the load cell connector (A) from the load cell cable. Using the side cutters, cut the cable ties.
4. Using a 1/4” hex Allen wrench, remove the screws, washers, and nuts (B) holding the load cell to the bed.
5. To remove a load cell at the head end of the bed, slide the load cell toward the center of the bed to clear the bushing that supports the load cell. Remove the load cell by lifting it up and out. To remove a load cell at the foot end of the bed, slide the load cell with the roller bushing toward the center of the bed to clear the litter frame. Remove the load cell and the roller bushing by lifting them up and out.
6. Reverse the above procedure to install the new load cell.

CAUTION

Be sure the load cell’s strain gauge is facing up when installing a new load cell or the weigh system will not work properly.

7. Recalibrate the weigh system (see “Scale Calibration” in “Scale System Diagnostics and Calibration” section).

Return To Table of Contents

LOAD CELL REPLACEMENT - GREASE POINTS

1. Apply Syn-Tech NS-18191-G grease to rollers on the Lift Header Assembly as shown in figure below.

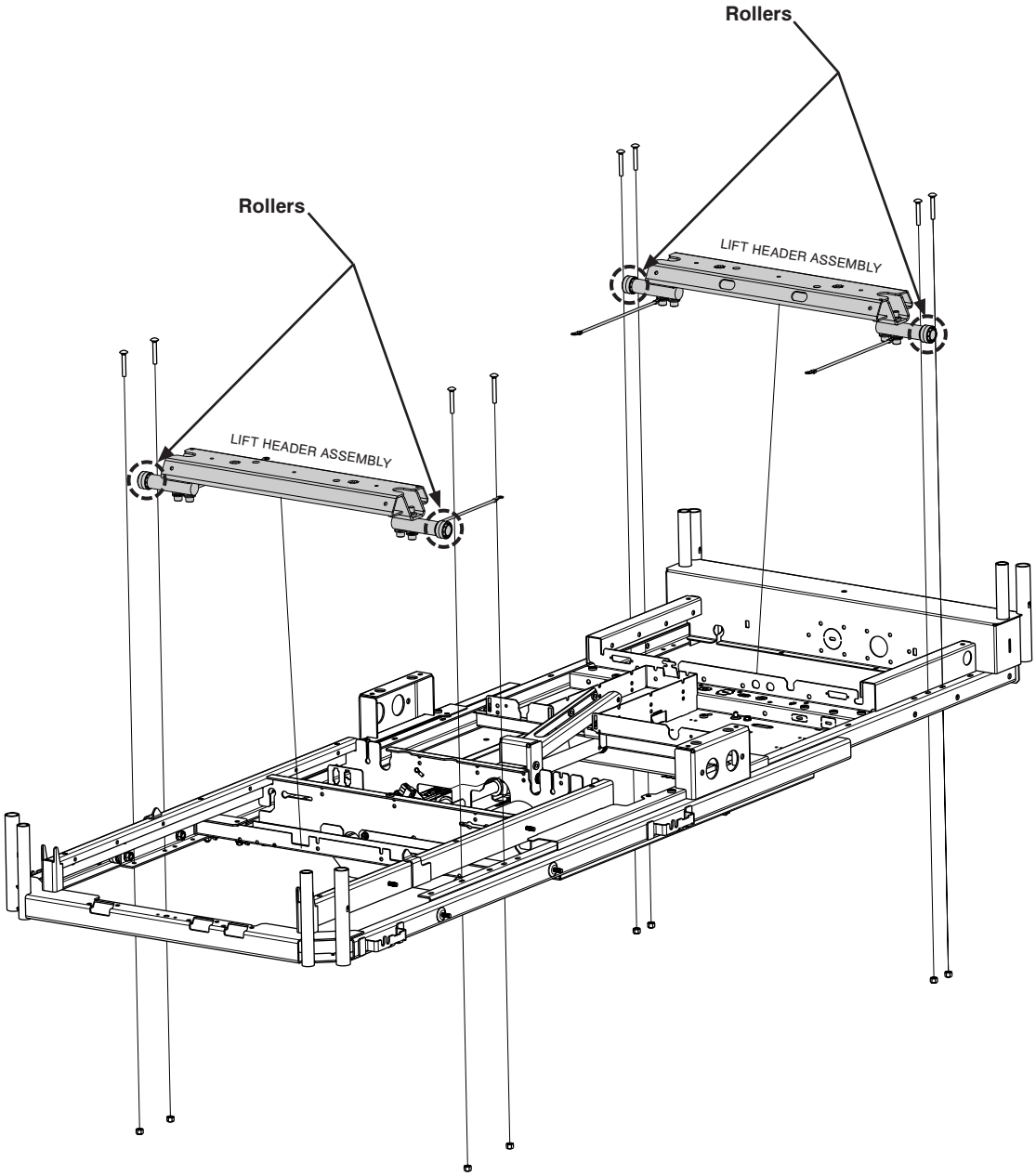

Litter Assembly (Reference p/n: 3006-300-197)

Return To Table of Contents

POWER SUPPLY REPLACEMENT

TOOLS REQUIRED:

- #2 Phillips Screwdriver
- T27 Torx

PROCEDURE:

1. Adjust the Fowler to approximately 25-30. Unplug the bed power cord from the wall socket.
2. Properly ground yourself (see “Static Discharge Precautions” section, page 19).
3. Using a T27 Torx, remove the two screws holding the head end litter access cover and remove the cover.
4. Disconnect all cables at the power supply. Note the locations of the cables so they will be reconnected properly to the replacement power board.
5. To remove the board from the litter standoffs, use a #2 Phillips screwdriver to remove the four screws holding the board to the litter. Remove the board.
6. Install the new board and reconnect all cables.
7. Reinstall the litter access panel and plug the bed power cord into a properly grounded wall receptacle.
8. Test the bed for accurate operation before returning it to service.

CPU BOARD REPLACEMENT

TOOLS REQUIRED:

- T27 Torx Driver

PROCEDURE:

1. Adjust the Fowler to approximately 25-30. Unplug the bed power cord from the wall socket.
2. Properly ground yourself (see “Static Discharge Precautions” section, page 19).
3. Using a T27 Torx, remove the two screws holding the head end litter access cover and remove the cover.
4. Disconnect all cables at the litter CPU board. Note the locations of the cables so they will be connected properly to the replacement litter CPU.
5. To remove the board from the litter standoffs, pull out on the retention clips and lift upward on the board.
6. Install the new board and reconnect all cables.
7. Reinstall the litter access panel and plug the bed power cord into a properly grounded wall receptacle.
8. Before installing new CPU, mirror the dip switch settings (SB1, SB2, SB3 and SB4) of the old CPU to the new CPU (see “CPU Board - 3006-308-900” section, page 107).
9. When a new CPU board is installed, the following procedures must be executed:
   a. Software Configuration procedures on page 109.
   b. Lift Potentiometer “Burn-In” procedures on page 61.
   c. If your Bed is equipped with a Scale System, execute the Scale Calibration procedures on page 23.
10. Test bed operations before returning the bed to service.

Return To Table of Contents

REPLACEMENT OF THE WIRELESS MODULE (NON-ZOOM)

TOOLS REQUIRED:

- 1/4” Ratchet
- 5/16” Socket
- T27 Torx Driver
- Small Slotted Screwdriver
- Diagonal Pliers

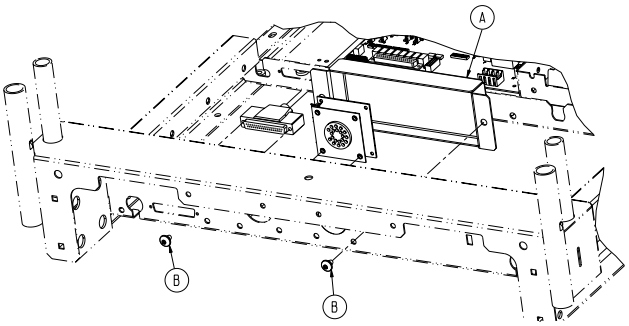

Figure 1

PROCEDURE:

1. Raise the bed to the high height.
2. Unplug the bed from the wall outlet.
3. Remove the headboard.
4. Using a T27 Torx driver, remove the two screws (B) securing the pendant port cover (A) to the litter frame shown in Figure 1.
5. Using diagonal pliers, cut the zip tie securing the cables to the litter frame shown in Figure 2.
6. Using a small slotted screwdriver, unclip the connector A going to the wireless module.
7. Using a 1/4” ratchet and a 5/16” socket, remove the two screws securing the wireless module to the litter frame shown in Figure 3.
8. Route the wireless module cable from its connection point out through the hole in the litter frame to remove the assembly shown in Figure 2.
9. Install the new wireless module assembly by routing the cable through the hole in the litter frame.
10. Using a 1/4” ratchet and 5/16” socket, re-install the screws to secure the wireless module to the frame.
11. Route the wireless module cable under the 37-pin connector and under the pendant port and then plug the cable into connector A.
12. Install a new zip tie to secure the cables to the litter frame and using diagonal pliers cut off the excess cable tie.
13. Using a T27 Torx driver, re-install the two screws to secure the pendant port cover to the litter frame.

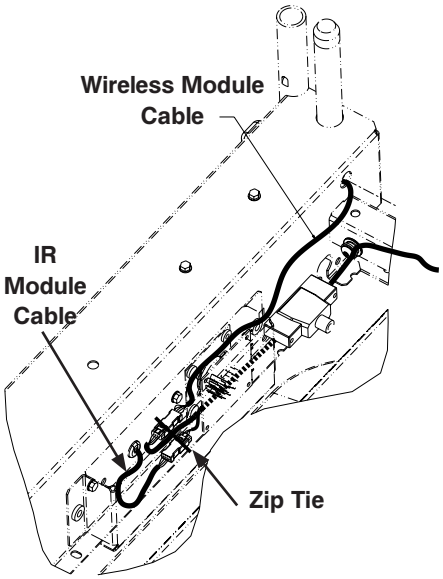

Figure 2

CAUTION

Make sure all cables are free and clear before tightening the screws.

14. IT will need to update the wireless device IP address or the DNS name to the new MAC address of the wireless module.
15. The bed will need to have the wireless network connection settings loaded prior to putting the bed back into service. Reference the *i*Bed Server Installation and Configuration Manual 5212-009-001.
16. Test the bed functionality prior to returning the bed to service.

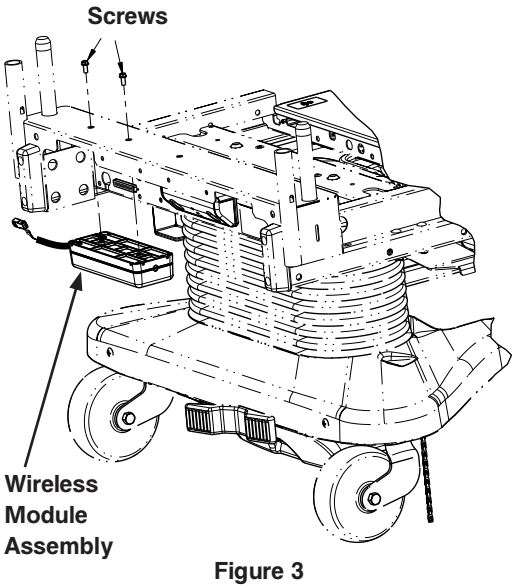

Figure 3

Return To Table of Contents

REPLACEMENT OF THE IR MODULE (NON-ZOOM)

TOOLS REQUIRED:

- 1/4” Ratchet
- 5/16” Socket
- T27 Torx Driver
- Small Slotted Screwdriver
- Diagonal Pliers

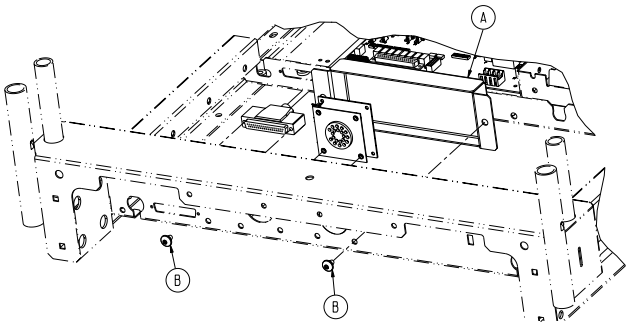

Figure 1

PROCEDURE:

1. Raise the bed to the high height.
2. Unplug the bed from the wall outlet.
3. Remove the headboard.
4. Using a T27 Torx driver, remove the two screws securing the pendant port cover to the litter frame shown in Figure 1.
5. Using diagonal pliers, cut the zip tie securing the cables to the litter frame shown in Figure 2.
6. Using a small slotted screwdriver, unclip the connector B going to the IR module.
7. Using a 1/4” ratchet and 5/16” socket, remove the two screws securing the IR module to the litter frame shown in Figure 4.
8. Route the IR module cable out through the hole in the litter frame.
9. Install the new IR module assembly by routing the cable through the hole in the litter frame.
10. Using a 1/4” ratchet and a 5/16” socket, re-install the two screws which secure the IR module to the litter frame.
11. 11. Install a new zip tie to secure the cables to the litter frame and using diagonal pliers cut off the excess cable tie.
12. Using a T27 Torx driver, re-install the two screws to secure the pendant port cover to the litter frame.

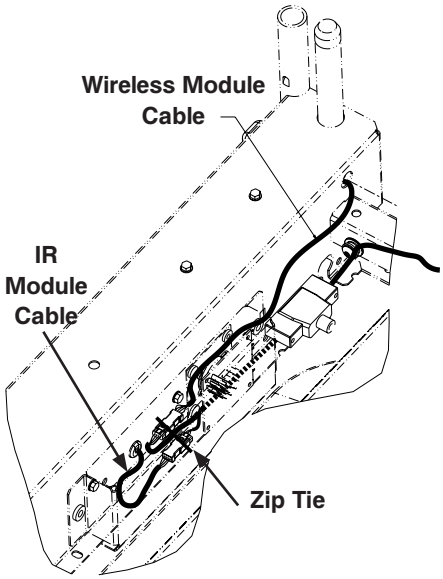

Figure 2

CAUTION

Make sure all cables are free and clear before tightening the screws.

13. Test the bed functionality prior to returning the bed to service.

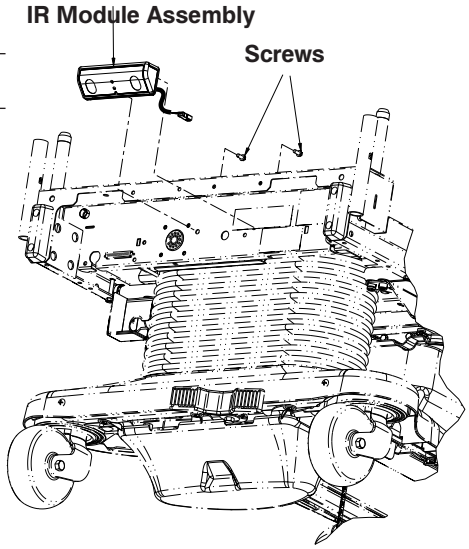

Figure 4

Return To Table of Contents

REPLACEMENT OF THE WIRELESS MODULE (ZOOM)

TOOLS REQUIRED:

- 1/4” Ratchet
- 5/16” Socket
- T27 Torx Driver
- Small Slotted Screwdriver
- Diagonal Pliers

Figure 1

PROCEDURE:

1. Raise the bed to the high height.
2. Unplug the bed from the wall outlet.
3. Remove the head board.
4. Using a 5/16” nut driver, remove the screw that holds the power cord clamp to the bumper weldment and remove the power cord with the cable clamp.
5. Using a T27 Torx, remove the four bolts at the head end of the bed that hold the control bar mounting bracket to the head end (see Figure 1).
6. Standing at the head end, pull the head end housing / control bar toward you and fold it downward.
7. Using diagonal pliers, cut the zip tie securing the cables to the litter frame shown in Figure 2.
8. Using a small slotted screwdriver, unclip the connector A going to the wireless module.
9. Using a 1/4” ratchet and a 5/16” socket, remove the two screws securing the wireless module to the pendant port cover shown in Figure 3.
10. Route the wireless module cable from its connection point out through the hole in the pendant port cover to remove the assembly shown in Figure 2.
11. Install the new wireless module assembly by routing the cable through the hole in the pendant port cover.
12. Using a ¼” ratchet and 5/16” socket, re-install the screws to secure the wireless module to the pendant port cover.

    Note

    Make sure the module cable exiting the wireless module is pointing inward towards the middle of the bed.

13. Route the wireless module and then plug the cable into connector A.

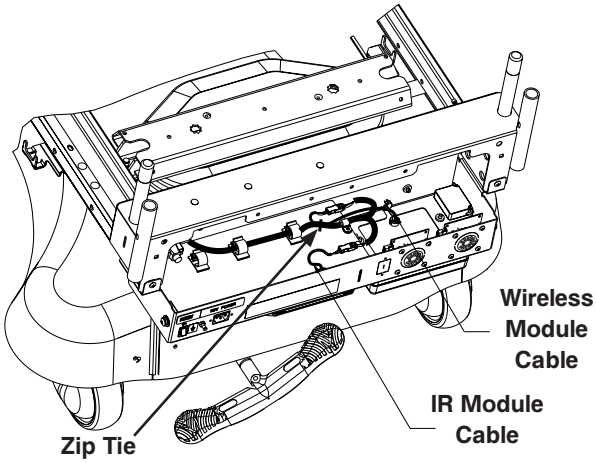

Figure 2

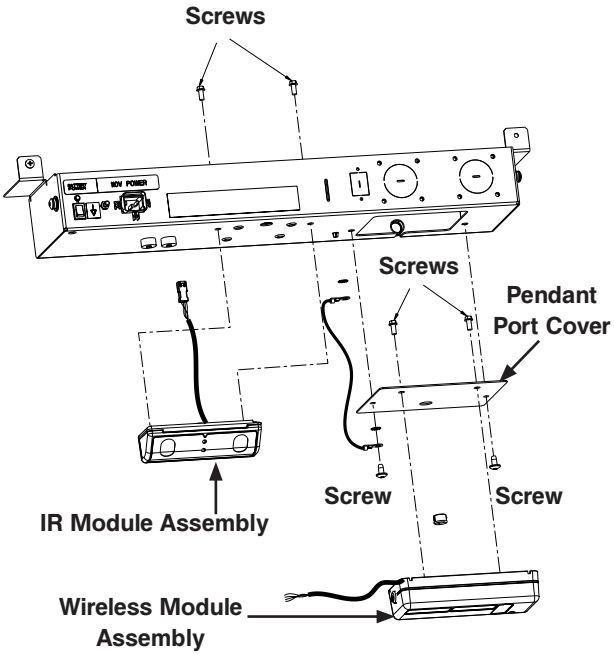

Figure 3

Return To Table of Contents

REPLACEMENT OF THE WIRELESS MODULE (ZOOM) (CONTINUED)

14. Install a new zip tie to secure the cables to the litter frame and using diagonal pliers cut off the excess cable tie.
15. Fold the control bar mounting bracket to the head end enclosure and secure it with the four bolts removed earlier in step 14 using a T27 Torx driver.
16. Plug the power cord back into the bed, making sure it is completely seated.
17. Using a #2 Phillips screwdriver, tighten the power cord retainer at the inlet.
18. Using a 5/16” nut driver, re-secure the power cord strain relief cable clamp with the power cord from where it was removed earlier.
19. IT will need to update the wireless device IP address or the DNS name to the new MAC address of the wireless module.
20. The bed will need to have the wireless network connection settings loaded prior to putting the bed back into service. Reference the *i*Bed Server Installation and Configuration Manual 5212-009-001.
21. Test the bed functionality prior to returning the bed to service.

Return To Table of Contents

REPLACEMENT OF THE IR MODULE (ZOOM)

TOOLS REQUIRED:

- 1/4” Ratchet
- 5/16” Socket
- T27 Torx Driver
- Small Slotted Screwdriver
- Diagonal Pliers

PROCEDURE:

1. Raise the bed to the high height.
2. Unplug the bed from the wall outlet.
3. Remove the head board.
4. Using a 5/16” nut driver, remove the screw that holds the power cord clamp to the bumper weldment and remove the power cord with the cable clamp.
5. Using a T27 Torx, remove the four bolts at the head end of the bed that hold the control bar mounting bracket to the head end (see Figure 1).
6. Standing at the head end, pull the head end housing / control bar toward you and fold it downward.
7. Using a small slotted screwdriver, unclip the three wire holders and remove the cables from them, shown in Figure 4.
8. Using a T27 Torx driver remove the two screws securing the AC cross over board cover to the litter frame and remove the cover, shown in Figure 4.
9. Using a small slotted screwdriver, unclip the connector B going to the IR module.
10. Using a ¼” ratchet and 5/16” socket, remove the two screws securing the IR module to the litter frame shown in Figure 3.
11. Route the IR module cable out through the hole in the litter frame.
12. Install the new IR module assembly by routing the cable through the hole in the litter frame.
13. Using a ¼” ratchet and a 5/16” socket, re-install the two screws which secure the IR module to the litter frame.
14. Plug the IR module connector B back in.
15. Using a T27 Torx driver, re-install the two screws to secure the AC cross over board cover to the litter frame.

Figure 1

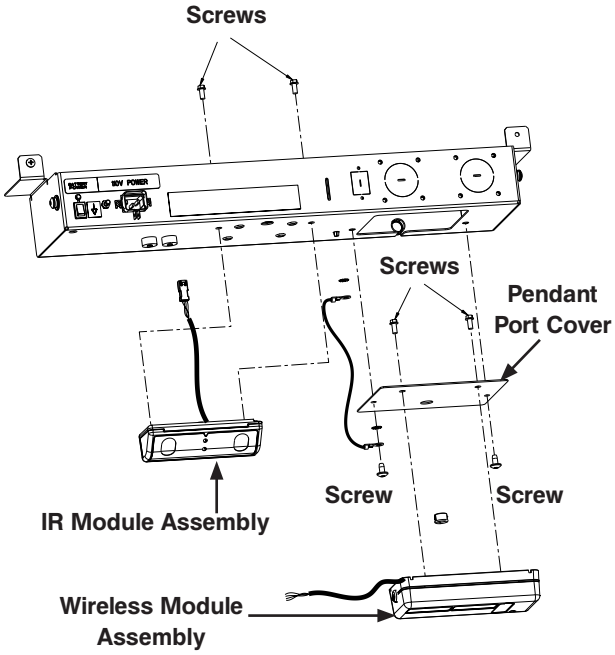

Figure 3

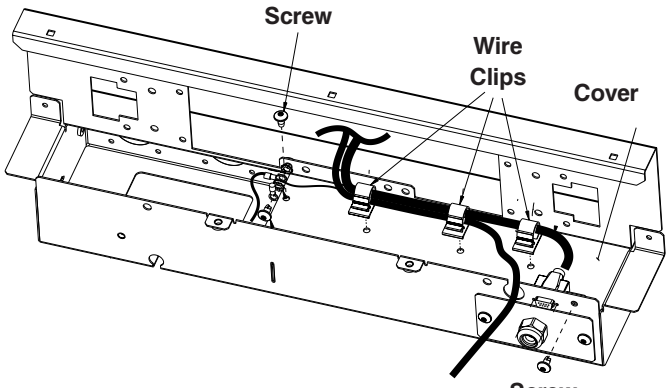

Figure 4

Return To Table of Contents

REPLACEMENT OF THE IR MODULE (ZOOM) (CONTINUED)

CAUTION

Make sure all cables are free and clear before tightening the screws.

16. Put the cables back into the wire holders and clip them together.
17. Fold the control bar mounting bracket to the head end enclosure and secure it with the four bolts removed earlier in step 14 using a T27 Torx driver.
18. Plug the power cord back into the bed, making sure it is completely seated.
19. Using a #2 Phillips screwdriver, tighten the power cord retainer at the inlet.
20. Using a 5/16” nut driver, re-secure the power cord strain relief cable clamp with the power cord from where it was removed earlier.
21. Test the bed functionality prior to returning the bed to service.

Return To Table of Contents

SOFT CONFIG. PROCEDURES

1. On the first power up, the footboard screen will display Figure S-1. Only two items should be displayed.

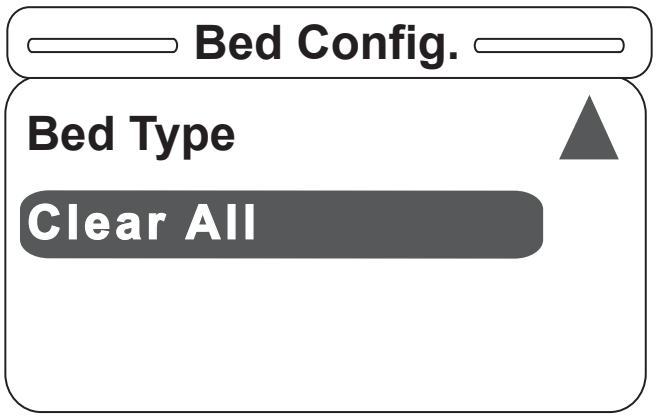

Figure S-1

2. Once the user selects the Bed Type item and hits “Enter” on the footboard panel, Figure S-2 will be displayed. To select an item hit “Enter” on the footboard panel. **Choose S3.**

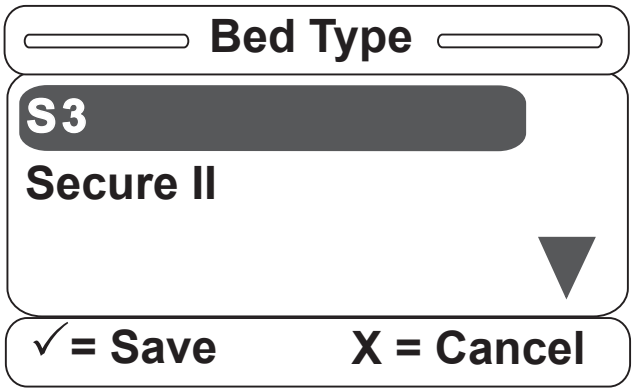

Figure S-2

3. Once a bed type has been selected from the list above, a confirmation screen such as that in Figure S-3 will be displayed, asking the user a question. (**The confirmation screen text will vary based on the item selected.** Figure S-3 indicates that the user chose the bed type S3.) Hit “Enter” on the footboard panel to confirm the bed type; hit “Exit” to cancel the operation.

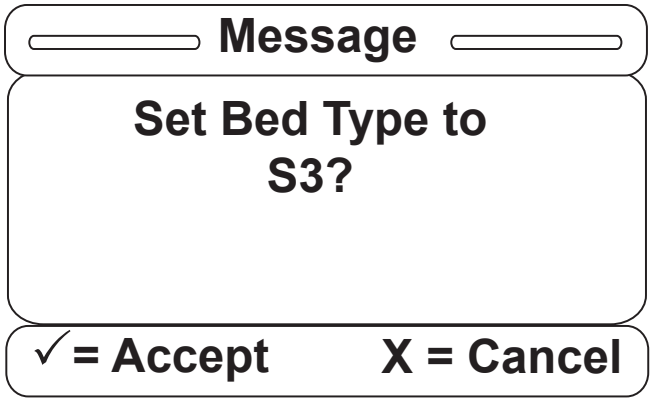

Figure S-3

Return To Table of Contents

SOFT CONFIG. PROCEDURES (CONTINUED)

4. Once the bed type is selected, the Bed Options item becomes available. Note that you can also see the Bed type that you've previously selected. Hit "Enter" on the footboard panel to choose the options for the product.

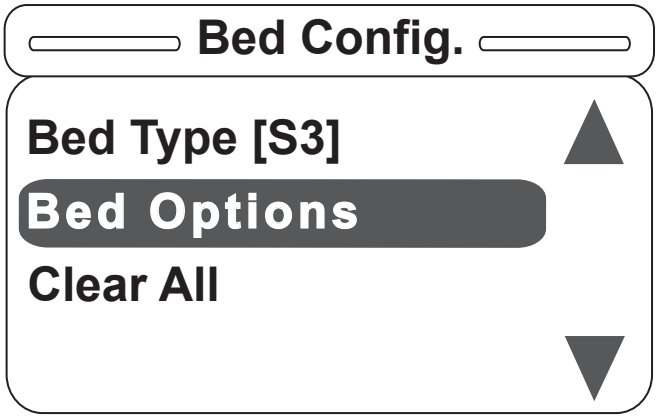

Figure S-4

5. Once the Bed Option item is selected, the menu in Figure S-5 will be displayed on the screen. **Each option must be set to OFF, ON or a variety of the option** (i.e., Zoom®/Batt. or Bed Exit). **Configure each option in the order presented on the screen** (i.e., set the Zoom®/Batt option before the Scale option, which should be set before the Bed Exit option, which should be set before the Awareness option).

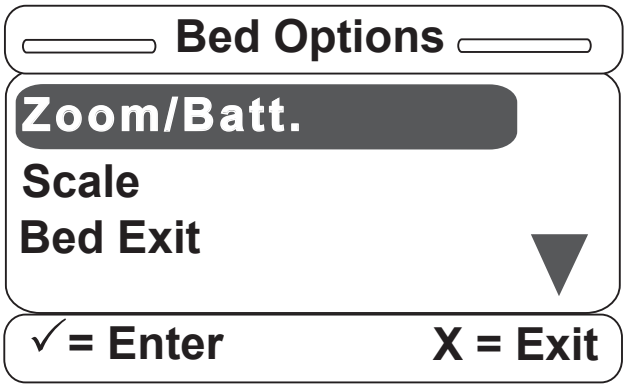

Figure S-5

6. Once the Zoom®/Batt. option is selected, Figure S-6 will be displayed. You can set this option to OFF, Zoom® or Battery Backup. Scroll up or down to select one of the three available items and hit "Enter" on the footboard panel.

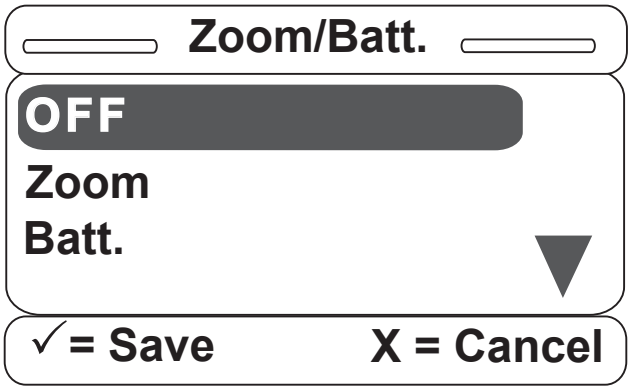

Figure S-6

Return To Table of Contents

SOFT CONFIG. PROCEDURES (CONTINUED)

7. Once you have selected one of the items, a confirmation screen such as that in Figure S-7 will be displayed. The confirmation screen text will vary based on the item you have selected. The confirmation screen displayed in Figure S-7 indicates that the user chose Zoom®. Hit “Enter” on the footboard panel to confirm the Zoom®/Batt. option; hit “Exit” to cancel the operation.

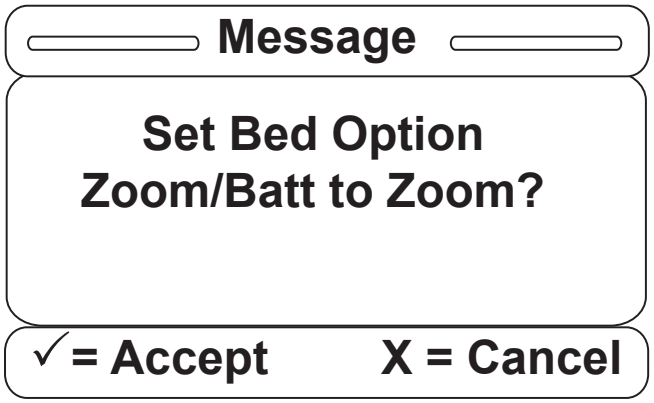

Figure S-7

8. Once the Zoom®/Batt. option is set, you will return to the Bed Options screen and the next item to be set will be highlighted. Note that you can also see what the previous option was set to.

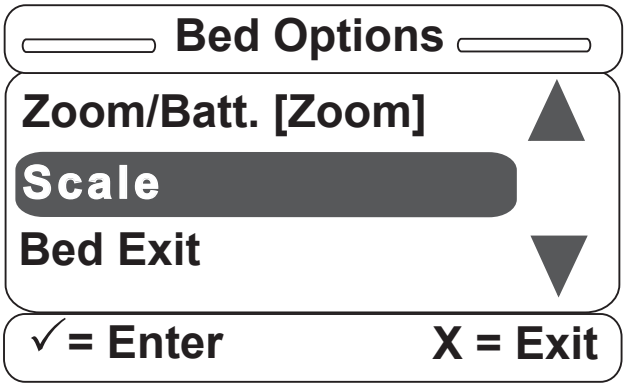

Figure S-8

9. Once the Scale item is selected, the screen in Figure S-9 will be displayed. You can set the Scale option to ON or OFF. Hit “Enter” on the footboard panel to make your selection or hit “Exit” to cancel.

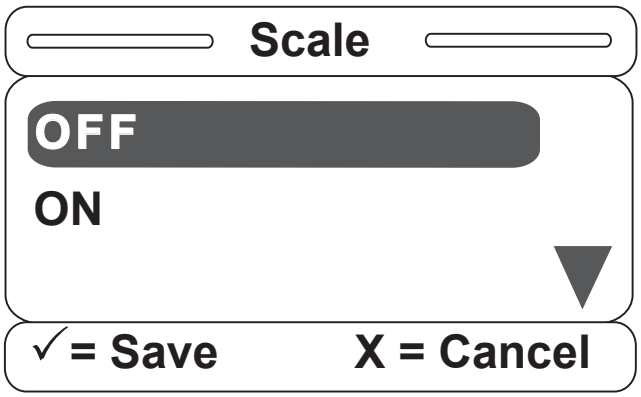

Figure S-9

Return To Table of Contents

SOFT CONFIG. PROCEDURES (CONTINUED)

10. Once you have selected one of the items, a confirmation screen will be displayed. The confirmation screen text will vary based on the item you have selected. The confirmation screen in Figure S-10 indicates that the Scale option was chosen to be ON. Hit “Enter” on the footboard panel to confirm your Scale option; hit “Exit” to cancel the operation.

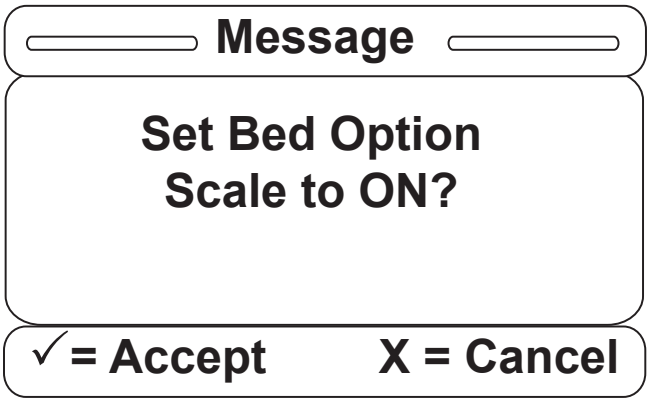

Figure S-10

11. Once the Scale option is set, you will be returned to the Bed Options screen to set the next option, which is Bed Exit.

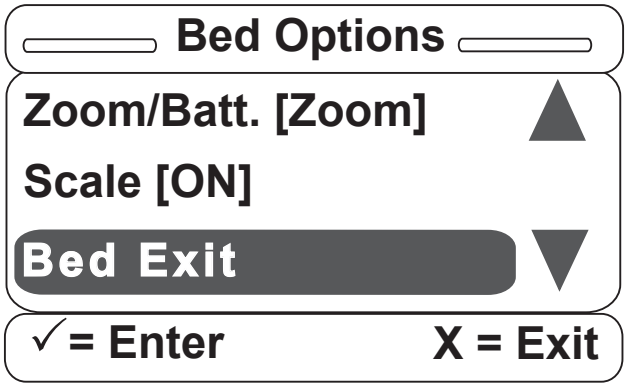

Figure S-11

12. Once the Bed Exit item is selected, the screen in Figure S-12 will be displayed. You can set the Bed Exit Option to OFF, Multi Zone or Single Zone. Hit “Enter” on the footboard panel to make your selection or “Exit” to cancel.

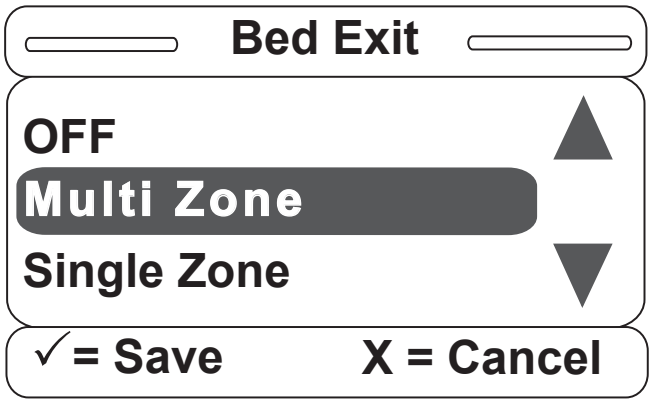

Figure S-12

Return To Table of Contents

SOFT CONFIG. PROCEDURES (CONTINUED)

13. Once you have selected one of the items, a confirmation screen such as that in Figure S-13 will be displayed. The confirmation screen text will vary based on the item you have selected. The confirmation screen in Figure S-13 indicates that the user chose the Bed Exit option to be Multi Zone. Hit “Enter” on the footboard panel to confirm your Bed Exit option; hit “Exit” to cancel the operation.

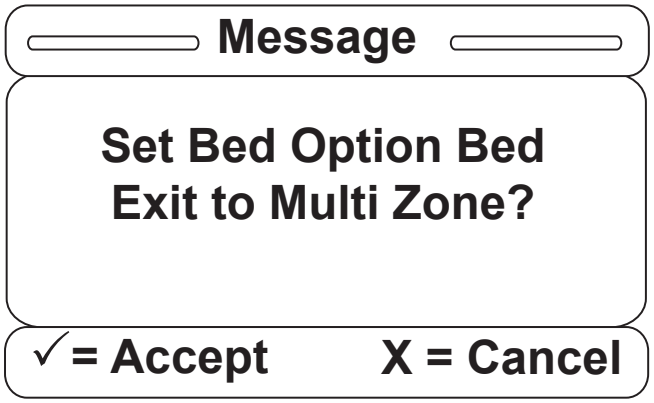

Figure S-13

14. Once the Bed Exit option is set, you will be returned to the Bed Options screen to set the next option, which is Awareness. **Note that you can see the state of each option that you have previously set.**

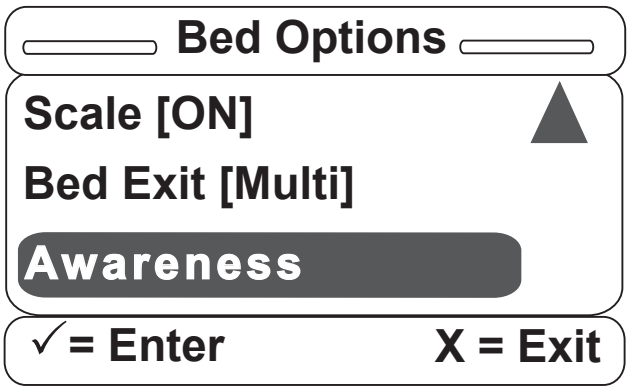

Figure S-14

15. Once the Awareness item is selected, the screen in Figure S-15 will be displayed. You can set the Awareness option to OFF or ON. Hit “Enter” on the footboard panel to make your selection or “Exit” to cancel. **Note that if Bed Exit was set to OFF, Awareness will then automatically be set to OFF as well. It cannot be set to ON unless either kind of Bed Exit was previously chosen.**

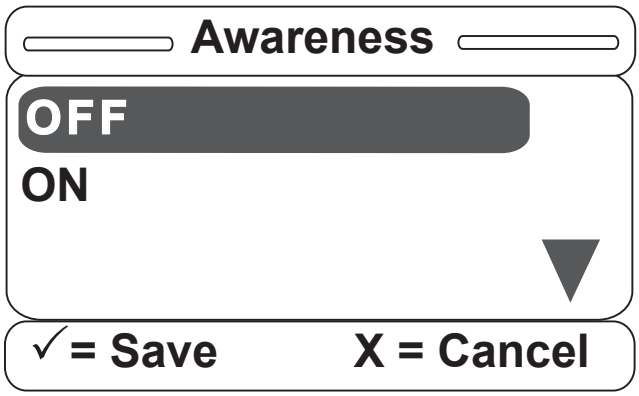

Figure S-15

Return To Table of Contents

SOFT CONFIG. PROCEDURES (CONTINUED)

16. Once you have selected one of the items, a confirmation screen such as that in Figure S-16 will be displayed. The confirmation screen text will vary based on the item you have selected. The confirmation screen in Figure S-16 indicates that the user chose the Awareness option to be ON. Hit “Enter” on the footboard panel to confirm your Awareness option; hit “Exit” to cancel the operation.

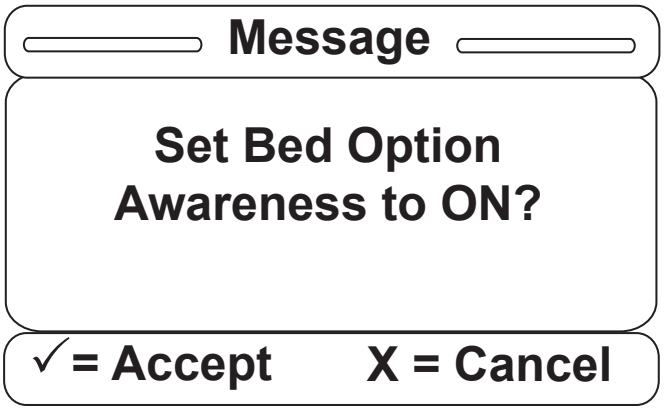

Figure S-16

17. Once the Awareness option is set, you will be returned to the Bed Options screen as shown in Figure S-17. Once there is text in square brackets next to each option in the Bed Options menu, all of your options have been set. You may re-enter any option and change the setting at any time.

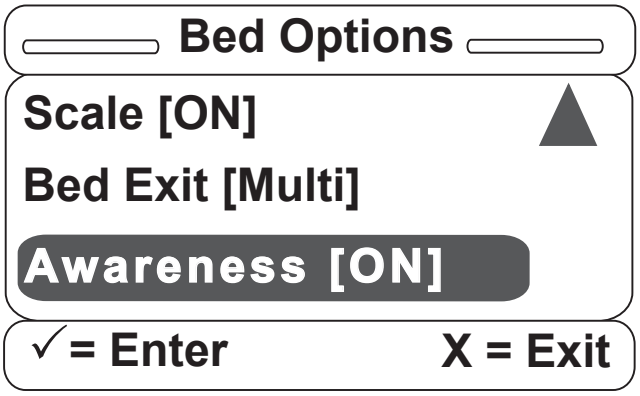

Figure S-17

18. Once the Awareness option is set, you will be returned to the Bed Options screen to set the next option, which is Wireless (Figure S-18). **Note that you can see the state of each option that you have previously set.**

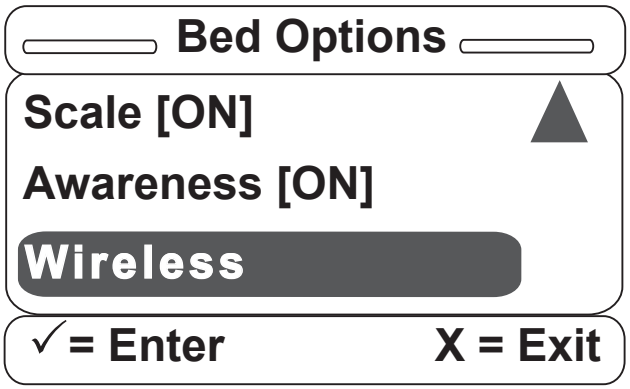

Figure S-18

Return To Table of Contents

SOFT CONFIG. PROCEDURES (CONTINUED)

19. Once the Wireless item is selected, the screen in Figure S-19 will be displayed. You can set the Wireless option to ON. Hit “Enter” on the footboard panel to make your selection or “Exit” to cancel the operation.

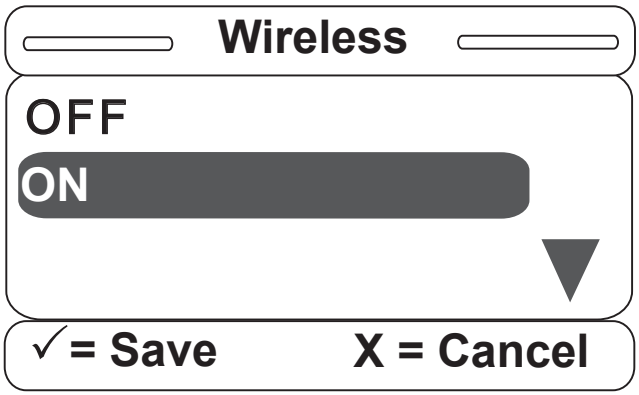

Figure S-19

20. Once you have selected one of the items, a confirmation screen such as that in Figure S-20 will be displayed. The confirmation screen text will vary based on the item you have selected. The confirmation screen in Figure S-20 indicates that the user chose the Awareness option to be ON. Hit “Enter” on the footboard panel to confirm your Wireless option; hit “Exit” to cancel the operation.

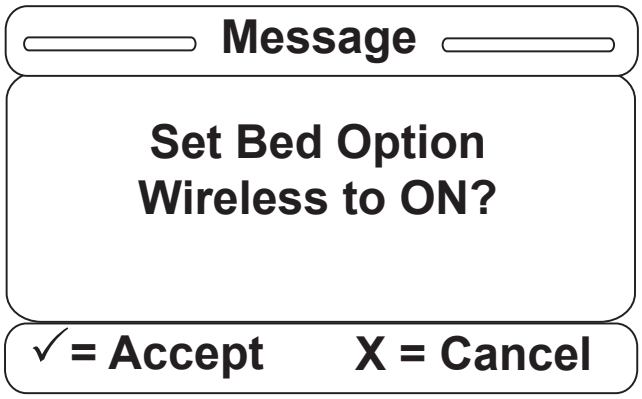

Figure S-20

21. Once the Wireless option is set, you will be returned to the Bed Options screen as shown in Figure S-21. Once there is text in square brackets next to each option in the Bed Options menu, all of your options have been set. You may re-enter any option and change the setting at any time.

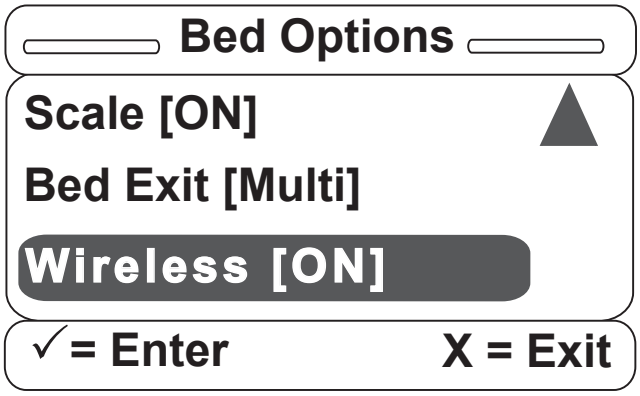

Figure S-21

Return To Table of Contents

SOFT CONFIG. PROCEDURES (CONTINUED)

22. Hitting “Exit” on the footboard panel while in the Bed Options screen will return the user to the Bed Config. main menu as shown in Figure S-22. Note that the user can see the state of the items previously set.

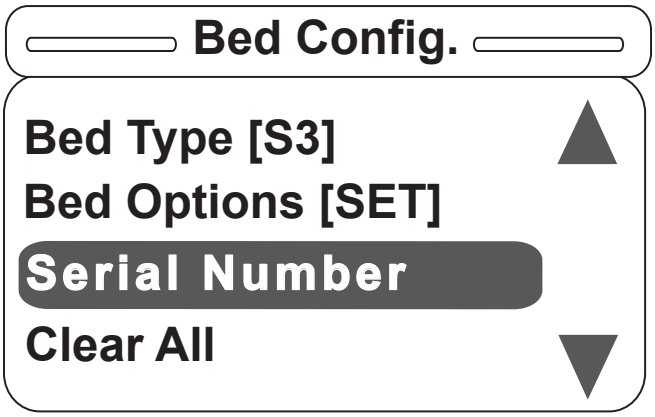

Figure S-22

23. There are two options available, as shown in Figure S-23. The Current SN item will display the saved serial number, while the Edit SN item will allow the user to edit the existing serial number.

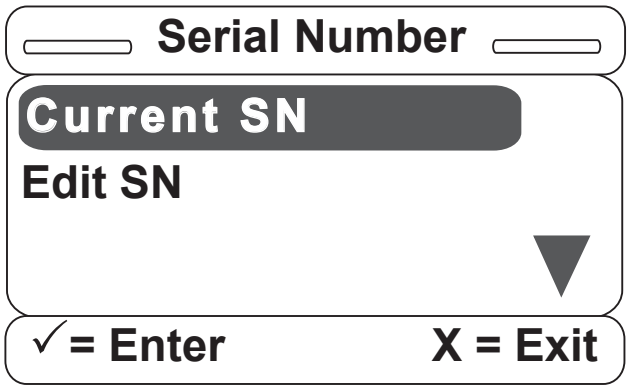

Figure S-23

24. If the Current SN item is selected and no serial number has been entered by the user, the screen in Figure S-24 will be displayed.

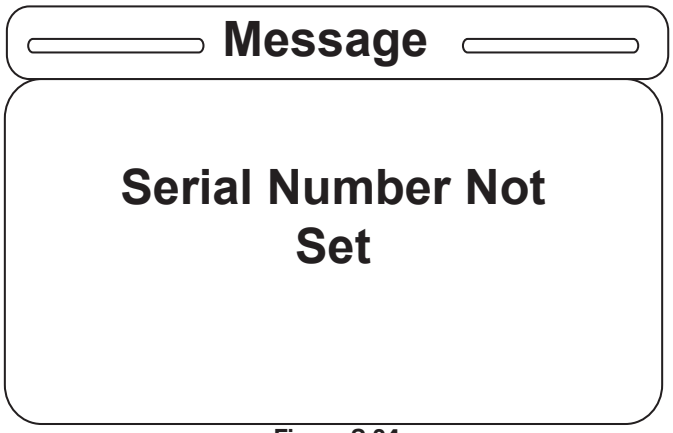

Figure S-24

Return To Table of Contents

SOFT CONFIG. PROCEDURES (CONTINUED)

25. If the Edit SN item is selected, the screen in Figure S-25 will be displayed to the user.

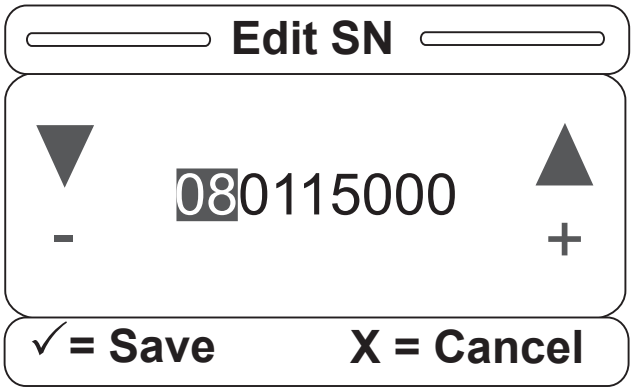

Figure S-25

26. Use the two blinking lock buttons to select the desired portion of the serial number. This selected portion will remain highlighted. Then use the footboard panel up/down buttons to edit the serial number.

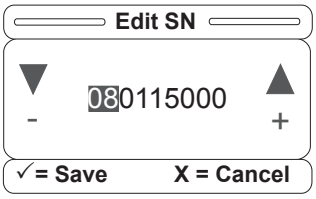

Figure S-26

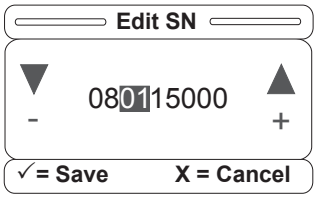

Figure S-27

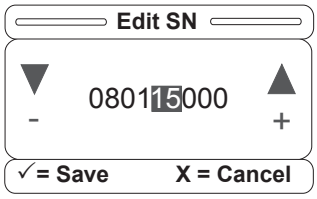

Figure S-28

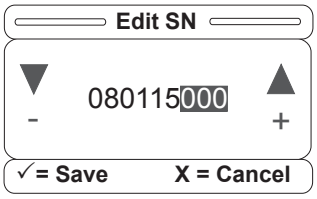

Figure S-29

27. Once the bed up/down lock button is pressed, the highlighted sections will change as indicated above in Figures S-26, 27, 28 and 29. Hold down “Enter” on the footboard panel for two seconds to save the serial number or press “Exit” to cancel the operation.

28. Once a serial number is saved and the user enters the Current SN item, the screen in Figure S-30 will be displayed. The entered serial number will be displayed until the user hits the “Exit” button on the footboard panel.

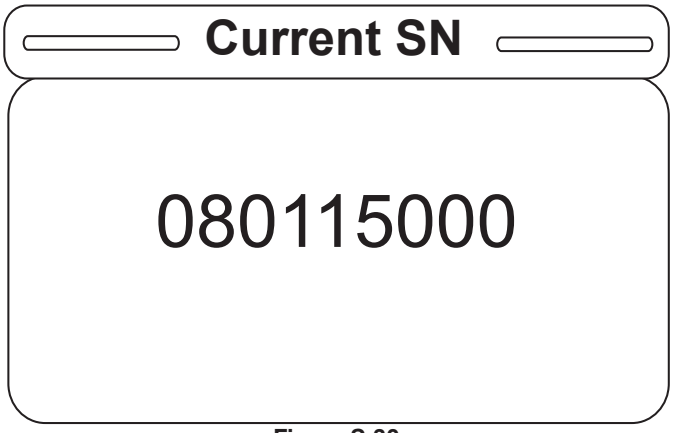

Figure S-30

Return To Table of Contents

SOFT CONFIG. PROCEDURES (CONTINUED)

29. Hitting “Exit” on the footboard panel while in the Serial Number screen will return the user to the Bed Config main menu as shown in Figure S-31. Note that the user can see the state of the items previously set.

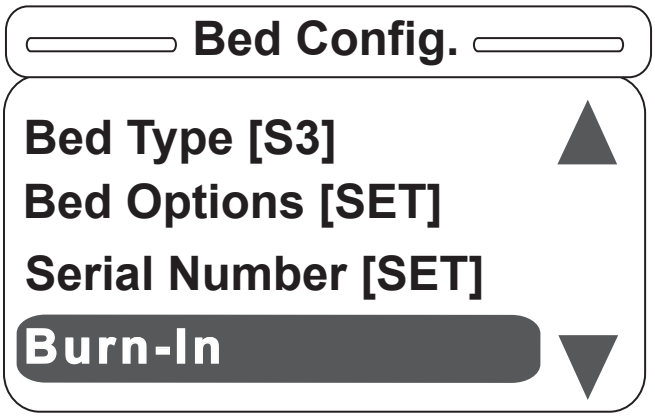

Figure S-31

30. Once the Burn-in item is selected, the screen in Figure S-32 will be displayed. The Burn-in Height item will walk the user through the burn-in height routine; and, similarly, the Burn-In Fowler item will walk the user through the burn-in fowler routine.

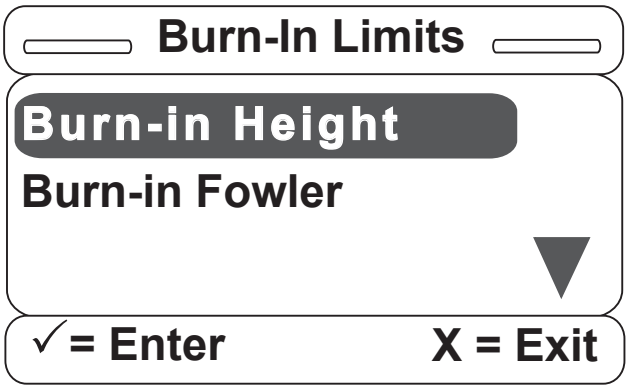

Figure S-32

31. The burn-in height routine will display different messages depending on if the user chooses to activate the Zoom®/Batt. option. **If the Zoom® or Battery Backup option is activated**, the message in Figure S-33 will be shown on the screen. If the Zoom®/Battery Backup option was deactivated, then the message would display: “Put Bed in Low Height.” Drive the bed to its high or low height (depending on the message displayed) and hold the Bed Motion Lock. The screen will display the message “Hold to Set Height Limits.” Once the lock button is held for two seconds, the message “Release Button” will flash.

Figure S-33

Return To Table of Contents

SOFT CONFIG. PROCEDURES (CONTINUED)

32. Once the lock button is released, the message "Height Limit Set" will be displayed and the user will be returned to the screen in Figure S-34 (The height limits are now burned in.) The "SET" text indicates that the limits are set. The process is similar for the Burn-in Fowler routine.

Once the Burn-in Fowler item is selected, the message "Set Fowler to Lower Limit" is displayed. Press and hold the "Enter" button to set the lower limit. The message "Set Fowler to 30^0" will now be displayed. Once this is completed, the message "Set Fowler to Upper Limit" will be dislpayed.

Once all three limits are burned in, the message "Fowler Calibration Complete" will be displayed for two seconds and the user will be returned to the Bed Config. menu.

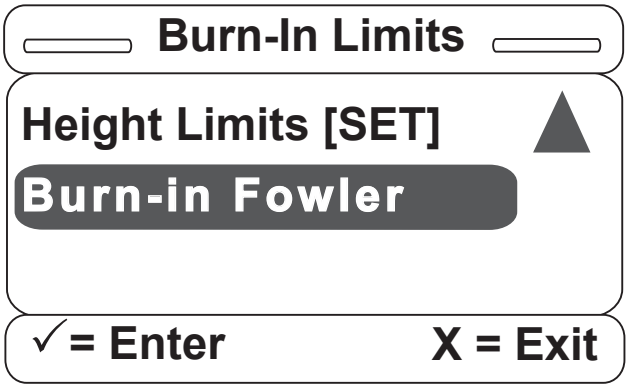

Figure S-34

33. Once all Bed Config. items are set, the main screen will be displayed as in Figure S-35.

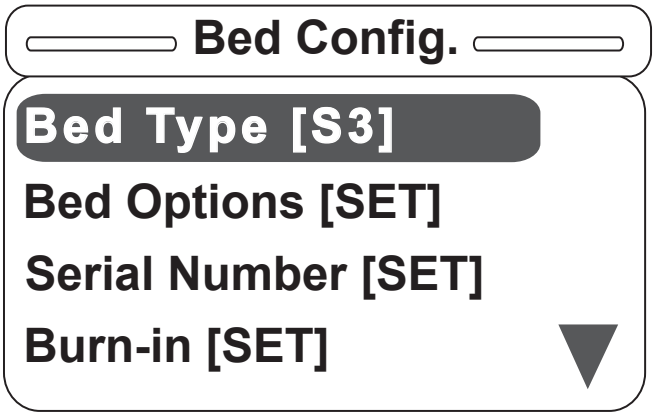

Figure S-35

34. Good to note:

- Any item may be adjusted at any time.
- If the Bed Type is changed, the serial number and burn-in limits are cleared and the process needs to be repeated by the user.
- If the Zoom® options are changed, the burn-in limits are cleared and the process needs to be repeated by the user.
- The user must cycle power to the bed to exit the Bed Config. mode.
- The user will not be able to exit the Bed Config. mode without setting all items (with the exception of the fowler limits). I.E., the user must choose the Bed Type, set all options to either ON, OFF or some variety of the option, enter the serial number and burn-in the height limits in order to exit the Bed Config. menu on a power cycle.

Return To Table of Contents

SOFT CONFIG. PROCEDURES (CONTINUED)

35. Good to Note (Continued)

- To quickly clear all entered Bed Config. items, there is a Clear All item which will always be the last item in the Bed Config. menu.

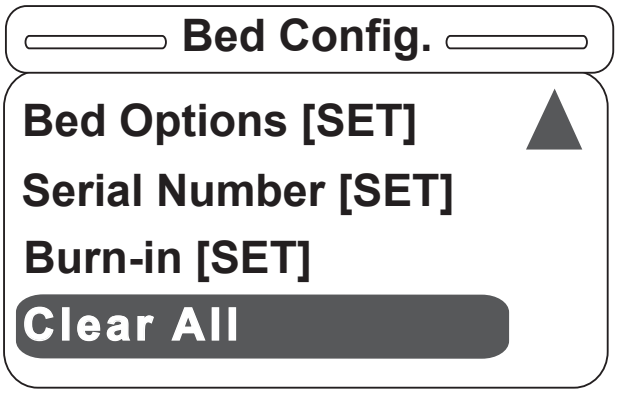

Figure S-36

- Once the “Clear All” item is selected, the confirmation screen in Figure S-37 will be displayed.

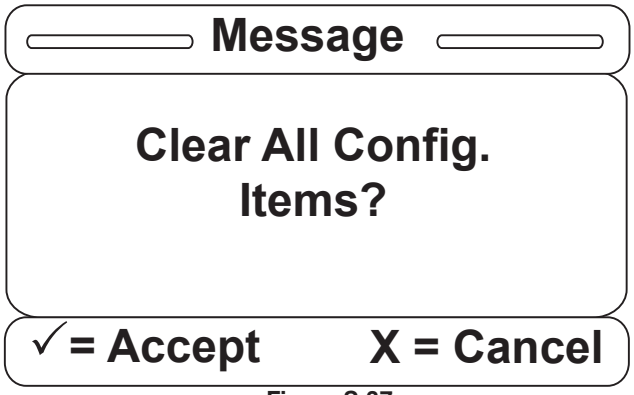

Figure S-37

- Once the user hits “Enter,” the previously set Bed Config. items (Bed Type, Bed Options, Serial Number, Height Limits or Fowler Limits) will be erased and the message in Figure S-38 will be displayed.

Figure S-38

- The Bed Config. menu will then only display the Bed Type menu item as shown in Figure S-39 and the user can now re-enter all the bed information starting with the Bed Type.

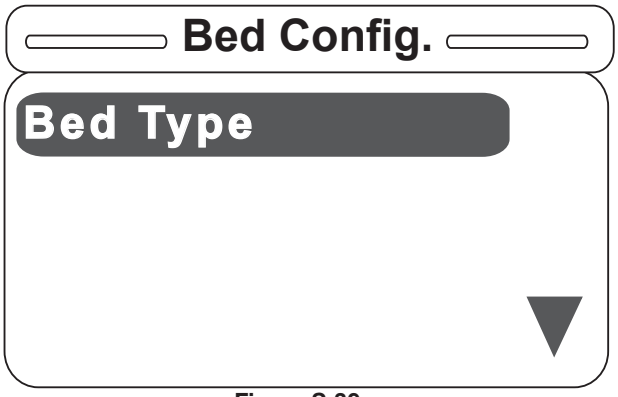

Figure S-39

Return To Table of Contents

OPTIONAL SMART TV INTERFACE “BURN-IN” PROCEDURE

This procedure is used for selecting the style of TV interface needed for your bed. If traditional TV is desired, no calibration is required. If optional Smart TV is available on the bed, select one of the TV Mode/Brands listed in the table below.

PROCEDURE

1. Press and hold the “Enter” button. While holding, cycle bed power. Continue to hold until the display flashes “Load Cell Check.” Release.
2. The display should present the Maintenance Menu. Ensure the “TV Config” element is highlighted and press “Enter.”
3. The display should present the “TV Config” Screen. The current TV selection will be highlighted. (Default selection is Traditional.)
4. Use the up and down arrow buttons to highlight the desired “TV Config.” See Table below for Model/Selection list.
5. Press the “Enter” button to select the new setting.
6. The display should present the following message when the new setting is saved: “Save Successful”.
7. The “TV Config” screen should reappear after two seconds and the new setting should be highlighted.

TV Configuration Menu Settings

TV Mode / Brand	Display TV Menu Select
RCA 1	TV Config. 1
RCA 2	TV Config. 2
Zenith 1	TV Config. 3
Zenith 2	TV Config. 4
Philips	TV Config. 5
Magnavox	TV Config. 6
Traditional	Traditional
Traditional Plus	Traditional Plus
Auto-Configure	Auto-Config.
Auto-Configure DV	Auto-Config. DV

Return To Table of Contents

FOWLER POTENTIOMETER REPLACEMENT

TOOLS REQUIRED:

- T27 Torx.
- Wire Cutters.
- 1/2” Open End Wrench.
- 7/64” Allen Wrench.

PROCEDURE

1. Unplug the bed power cord from the wall socket.
2. Manually raise the fowler to 60 degrees.
3. Using a 7/64” Allen wrench, loosen the screw holding the linkage to the potentiometer shaft and remove the linkage from the shaft.
4. Using a ½” open end wrench, remove the nut holding the potentiometer to the frame and disconnect from the 3 pin quick disconnect.
5. Install the fowler potentiometer to the Fowler platform arm using a ½” combination wrench, making sure to align the potentiometer alignment tab up with the notch in the fowler frame.
6. Using a multi-meter and small flat blade screwdriver, set the fowler potentiometer to 500 +/-50 ohms, using the black and white wires from the fowler potentiometer.
7. Using a 7/64” Allen wrench, tighten the set screw on the fowler potentiometer linkage attaching to the potentiometer. Make sure to double check the ohms reading after tightening the set screw; readjustment maybe necessary.
8. Refer to the Fowler Potentiometer “burn-in” procedure to set the Fowler angle.

FOWLER POTENTIOMETER “BURN-IN” PROCEDURE

Note: It requires **two people** to enable the diagnostics mode for the bed.

PROCEDURE

1. Unplug the bed power cord from the wall.
2. On the footboard control panel, hold down the bed motion lock button, the knee lock out button and the Reverse Trend button. While still holding the buttons, plug the power cord into the wall socket. Release the footboard buttons. Using the up/down arrow buttons, scroll to the “Burn-In” item and hit “Enter.” Select “Burn-In Fowler” and hit “Enter.” A message will appear: “Set Fowler to 0^0”.
3. Using the footboard controls, run the Fowler to 0 degrees. Press the “Enter” button; a message will appear on the display: “Set Fowler to 30 degrees.”
4. Using the footboard controls, run the fowler to 30 degrees. Press the “Enter” button; a message will appear on the display: “Set Fowler to Upper Limit” (60 degrees).
5. Using the footboard controls, run the fowler to Upper Limit (60 degrees). Press the “Enter” button; a message will appear on the display: “Fowler Calibration Complete” for two seconds, and then the user will be returned to the “Burn-In” menu. The menu item should now read “Fowler Limits [SET]”.
6. Unplug the bed and plug back in to return to normal operating mode.

WARNING

Ensure there is no patient on the bed while the burn-in procedure is being performed.

Return To Table of Contents

ZOOM® OPTION BATTERY REMOVAL AND REPLACEMENT

TOOLS REQUIRED:

- Torx T27
- 7/16” Wrench
- 1/2” Socket Wrench
- Bungee Cords
- Phillips Screwdriver
- 5/32” Allen

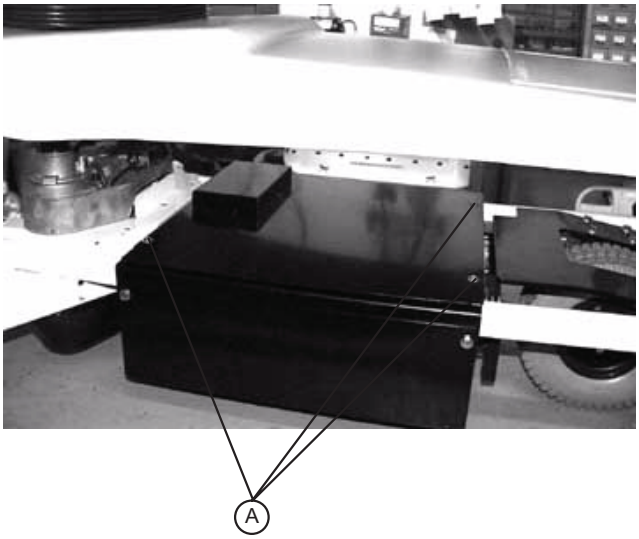

PROCEDURE:

1. Raise the litter to full up. Unplug the power cord from the wall socket and push the battery power On/Off switch to the “Off” position.
2. Using a Phillips screwdriver, remove the four screws holding the base hood to the base frame.
3. Lift the base hood and support it from the litter frame using bungee cords or the equivalent.
4. Properly ground yourself (see “Static Discharge Precautions” section).
5. Open the cable clamp at the head end, left side of the base frame and remove the cables from the clamp.
6. Using a Torx T27, remove the four screws (A) holding the electronics box cover and remove the cover.
7. Disconnect the two battery cables (B).

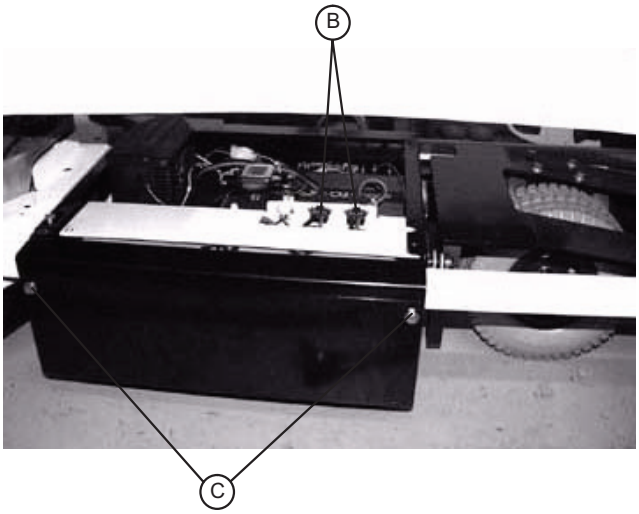

WARNING

The battery tray assembly weighs 50 pounds. Use caution when removing the two hex head screws securing it to the base frame or personal injury could result. Battery posts, terminals and related accessories contain lead and lead compounds, chemicals known to the state of California to cause cancer and birth defects or other reproductive harm. Wash hands after handling.

8. Support the battery tray assembly from the bottom. Using a 7/16” hex socket or wrench, remove the two screws (C) supporting the battery tray.
9. The back of the battery tray assembly has a lip which catches on the electronics box. Lift up and out to remove the battery tray assembly.
10. Using a Phillips screwdriver, remove the two screws holding the battery terminal to the battery tray assembly.
11. Using a 5/32” Allen wrench and a 7/16” wrench, remove the four screws and nuts holding the battery harness to the battery terminals.
12. Reverse steps 1 - 11 to install the new batteries. Complete the last four items of the setup procedures in the “Setup Procedures (Zoom® Option)” section.

Return To Table of Contents

ZOOM® OPTION DC MOTOR BOARD REMOVAL AND REPLACEMENT

TOOLS REQUIRED:

- Phillips Screwdriver
- 1/8” Allen Wrench
- Bungee Cords
- T27 Torx

PROCEDURE:

1. Raise the litter to the full up position.
2. Unplug the power cord from the wall socket and push the battery power On/Off switch to the “Off” position.
3. Using a Phillips screwdriver, remove the four screws holding the base hood to the base frame.
4. Open the cable clamp at the head end, left side of the base frame and remove the cables from the clamp.
5. Lift the base hood and support it from the litter frame using bungee cords or the equivalent.
6. Using a T27 Torx, remove the four screws holding the cover to the side of the electronics box.
7. Properly ground yourself (see “Static Discharge Precautions” section).
8. Using a 1/8” Allen wrench, remove the four bolts and standoffs holding the motor board to the electronics box.
9. Remove all cables from the motor board and remove the board.

Note

Note the locations of the cables so you can connect them properly to the new motor board.

10. Reverse steps 1 - 8 to install the new power board.

Return To Table of Contents

ZOOM® OPTION DRIVE MOTOR REMOVAL AND REPLACEMENT

TOOLS REQUIRED:

- Phillips Screwdriver
- 1/2” Socket Wrench
- Bungee Cords
- Floor Jack
- T27 Torx

PROCEDURE:

1. Raise the litter to the full up position.
2. Unplug the power cord from the wall socket and push the battery power On/Off switch to the “Off” position.
3. Using a Phillips screwdriver, remove the four screws holding the base hood to the base frame.
4. Open the cable clamp at the head end, left side of the base frame and remove the cables from the clamp.
5. Lift the base hood and support it from the litter frame using bungee cords or the equivalent.
6. Using a T27 Torx, remove the four screws holding the power board cover to the side of the electronics box. Remove the two motor wires from the power board and remove the T27 Torx ground screw.
7. Apply the brakes and disengage the drive wheel. Place a floor jack under the leaf spring at the foot end of the bed and raise the wheels approximately 3” off the floor.
8. Using a 1/2” socket wrench, remove the four bolts holding the drive motor to the leaf spring.

CAUTION

Support the drive motor before removing the four bolts to prevent it from falling to the floor and becoming damaged.

9. Reverse steps 1 - 8 to install the new drive motor.
10. Run through the operation of the power drive wheel to ensure it is operating properly before returning the unit to service.

Return To Table of Contents

ZOOM® OPTION CONTROL BAR POTENTIOMETER REPLACEMENT

Tools Required:

- T27 Torx
- 1/2” Box End Wrench
- #2 Phillips Screwdriver
- Wire Cutters
- Small Flat Blade Screwdriver
- 5/16” Nut Driver
- Multimeter

PROCEDURE:

1. Raise the litter and the head end to the full up position.
2. Remove the head board from the bed.
3. Unplug the power cord from the wall socket and push the battery power On/Off switch to the “Off” position.
4. Using a 5/16” nut driver, remove the screw holding the power cord clamp to the bumper weldment and remove the clamp from the bumper.
5. Using a T27 Torx, remove the four bolts (A) at the head end of the bed holding the control bar mounting bracket to the head end (see Figure 1).
6. Using a #2 Phillips screwdriver, remove the three screws (B) holding the control bar cover to the head end of the bed (see Figure 2).
7. Standing at the head end, pull the control bar toward you and fold down the control bar mounting bracket.
8. Using a 1/2” wrench, remove the nut holding the potentiometer to the mount. Using wire cutters, cut the wire ties. Unplug the potentiometer cable from the CPU display board and remove the potentiometer.
9. Install the new potentiometer. Using a small flat blade screwdriver, turn the potentiometer shaft clockwise until it stops. Turn it back counterclockwise a 1/2 turn until multimeter reads 2.35 ohms to 2.55 ohms using the black and red wires.
10. After the new potentiometer has been installed, the potentiometer “burn-in” procedure must be performed (see “Zoom® Option Control Bar Potentiometer ‘Burn-In’ Procedure”).
11. After performing the “burn-in” procedure, reverse steps 1 - 7 to reassemble the bed.
12. Test all functions before returning the unit to service.

Figure 1

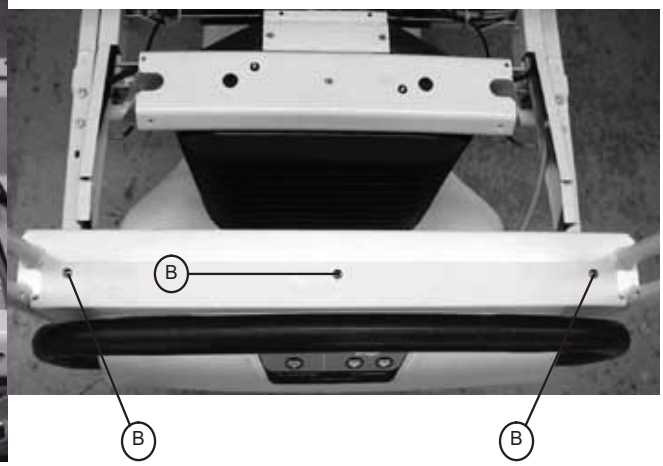

Figure 2

Return To Table of Contents

ZOOM® OPTION CONTROL BAR POTENTIOMETER “BURN-IN” PROCEDURE

Tools Required:

- T27 Torx
- # 2 Phillips Screwdriver

PROCEDURE:

1. Raise the litter and the head end to the full up position.
2. Remove the head board from the bed.
3. Unplug the power cord from the wall socket and push the battery power On/Off switch to the “Off” position.
4. Using a 5/16” nut driver, remove the screw holding the power cord clamp to the bumper weldment and remove the clamp from the bumper.
5. Using a T27 Torx, remove the four bolts (A) at the head end of the bed holding the control bar mounting bracket to the head end (see Figure 1).
6. Using a #2 Phillips screwdriver, remove the three screws (B) holding the control bar cover to the head end of the bed (see Figure 2).
7. Standing at the head end, pull the control bar toward you and fold down the control bar mounting bracket.
8. Ensure the battery on/off switch is in the “Off” position (LED is Off).
9. Hold down the yellow button on the back of the display CPU board.
10. With the switch depressed, move the battery power on/off switch to the “ON” position (LED will light) and continue holding for three seconds.
11. Press and hold the yellow button on the back of the display CPU board.
12. Move the battery power on/off switch to the “on” position (LED will light) and continue holding switch for three seconds.
13. Verify the “Engage Drive Wheel” led at the head end display housing is flashing.
14. Move the battery power on/off switch back to the “Off” position (all LED’s will go out).
15. Close the drive box.
16. Ensure the control bar is in the center of travel by pushing and pulling the bar, then returning the bar to the neutral position.
17. With no objects touching the control bar, turn the battery power on/off switch to the “On” position.
18. The three LED’s on the front of the bed will flash initially to show the battery voltage of the bed by lighting zero, one, two or three LED’s.
19. After the battery charge has been displayed by the three LED’s, all three LED’s will flash twice.
20. After all three LED’s have flashed twice, push the drive handle to the full forward position. Hold the drive handle in the full forward position until all three LED’s flash twice again (three seconds).
21. The “ENGAGE DRIVE WHEEL” LED will flash once.
22. The control bar potentiometer is calibrated.
23. Return the control bar to the neutral position.
24. Grasp the control bar and squeeze either motion switch without moving the control bar forward or backward.
25. Verify the bed does not move.
26. Standing at the head end of the bed, grasp the control bar and squeeze either motion switch; then push the control bar forward.

Return To Table of Contents

ZOOM® OPTION CONTROL BAR PENTIOMETER “BURN-IN” PROCEDURE (CONTINUED)

27. Verify the bed moves forward.
28. Standing at the head end of the bed, grasp the control bar and squeeze either motion switch, then pull the control bar backwards.
29. Verify the bed moves backward.
30. Move the battery power on/off switch “Off”, wait a few seconds, then back “On” again.
31. Repeat steps 18-23 to verify that the burn in procedure was performed correctly.

ZOOM® OPTION AC CROSSOVER BOARD REPLACEMENT

TOOLS REQUIRED:

- T27 Torx
- #2 Phillips Screwdriver
- Wire Cutters
- Needle Nose Pliers

PROCEDURE:

1. Raise the litter and the head end to the full up position.
2. Remove the head board from the bed.
3. Unplug the power cord from the wall socket and push the battery power On/Off switch to the “Off” position.
4. Using a 5/16” nut driver, remove the screw holding the power cord clamp to the bumper weldment and remove the clamp from the bumper.
5. Using a T27 Torx, remove the four bolts (A) at the head end of the bed holding the control bar mounting bracket to the head end (see Figure 1).
6. Using a #2 Phillips screwdriver, remove the three screws (B) holding the control bar cover to the head end of the bed (see Figure 2).
7. Standing at the head end, pull the control bar toward you and fold down the control bar mounting bracket.
8. Using a T-27 Torx, remove the two bolts holding the AC crossover board cover to the head end frame and remove the cover.
9. Disconnect all wires from the AC crossover board
10. Using needle nose pliers, release the four mounting standoffs from the board and remove the board.
11. Reverse steps.
12. Test Functionality.

Return To Table of Contents

Zoom® OPTION DISPLAY/CPU BOARD REPLACEMENT

TOOLS REQUIRED:

- T27 Torx
- #2 Phillips Screwdriver

PROCEDURE:

1. Raise the litter and the head end to the full up position.
2. Remove the head board from the bed.
3. Unplug the power cord from the wall socket and push the battery power On/Off switch to the “Off” position.
4. Using a 5/16” nut driver, remove the screw holding the power cord clamp to the bumper weldment and remove the clamp from the bumper.
5. Using a T27 Torx, remove the four bolts (A) at the head end of the bed holding the control bar mounting bracket to the head end (see Figure 1).
6. Using a #2 Phillips screwdriver, remove the three screws (B) holding the control bar cover to the head end of the bed (see Figure 2).
7. Standing at the head end, pull the control bar toward you and fold down the control bar mounting bracket.
8. Disconnect all wires from the display/CPU board.
9. Using a #2 Phillips screwdriver, remove the six screws holding the display/CPU board to the control bar cover and remove the board.
10. Reverse steps 8 and 9 to install the new board. After the new board has been installed, the potentiometer “burn-in” procedure must be performed (see “Zoom® Option Control Bar Potentiometer ‘Burn-In’ Procedure” section, page 61).
11. Reverse procedure.
12. Test functionality.

Return To Table of Contents

HEAD AND FOOT SIDERAIL COVER REMOVAL

TOOLS REQUIRED:

- #2 Phillips Screwdriver

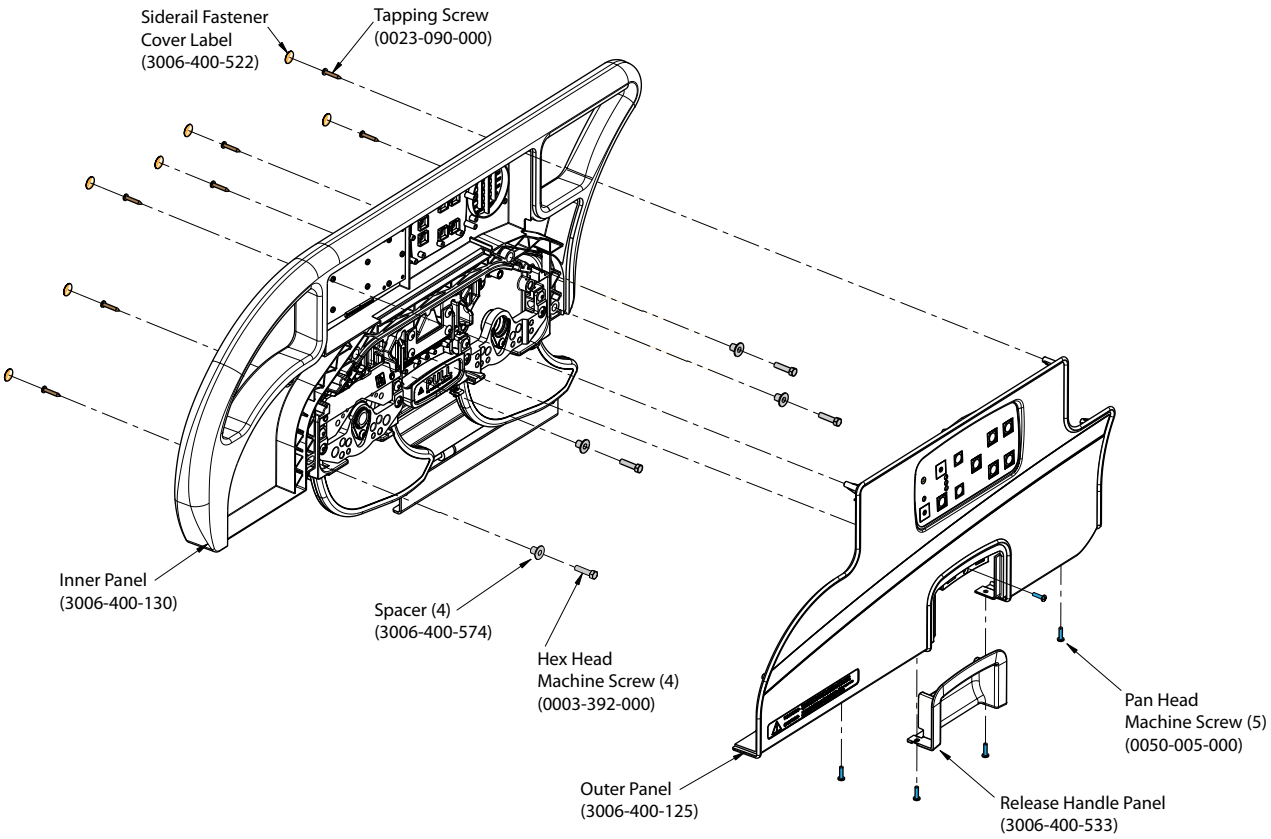

PROCEDURE:

1. Unplug the power cord from the wall receptacle.
2. Remove the seven screw cover labels from the inside of the rail.
3. Using a #2 Phillips screwdriver, remove the 8 phillips screws (A) holding the covers (B) to the siderail.
4. Remove the one screw holding the release handle panel and remove panel.

CAUTION

There are two cables connecting the outside cover to the head end siderail. Be careful not to pull on them when removing the cover.

5. Remove the cables from the siderail. Make note of the proper location for the cables.
6. Reverse the above steps to reattach the cover.

CAUTION

Do not snag the cables when installing the siderail cover.

Return To Table of Contents

HEAD SIDERAIL HOOP REPLACEMENT

TOOLS REQUIRED:

#2 Phillips Screwdriver
3/8” Drive Ratchet
7/16” Socket

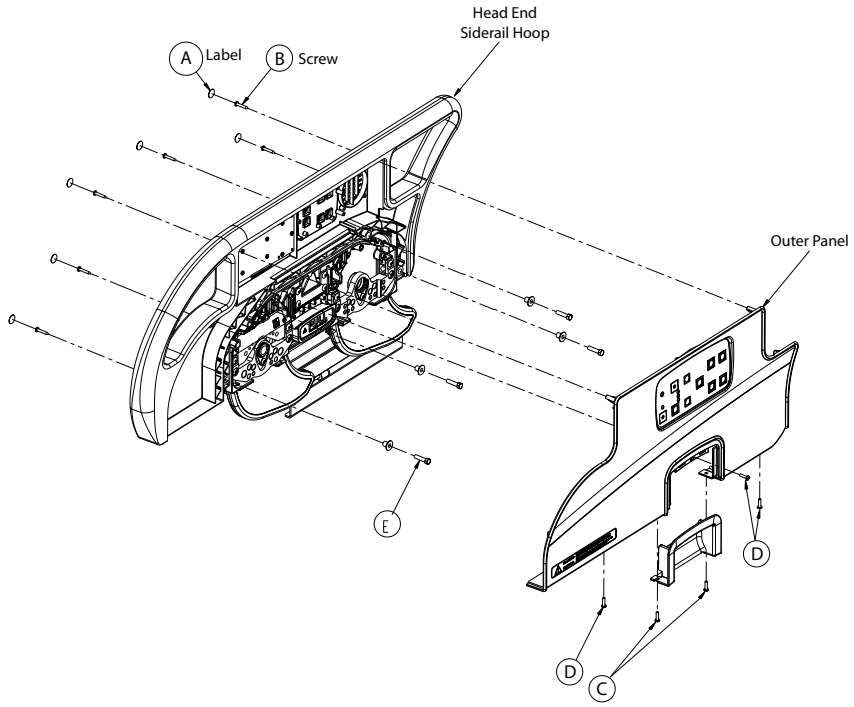

PROCEDURE:

1. Raise the siderail to the full upright position.
2. Using a regular screwdriver, remove the six labels (A) on the inside of the siderail.
3. Remove the six Pan Head screws (B) from the siderail panel.
4. Remove the two Pan Head screws (C) securing handle casing to panel and then pull down on the handle to remove.
5. Remove the three Pan Head screws (D) to remove the outer siderail panel.
6. Pull the outer siderail panel straight out.
7. Unplug the two cable harnesses from the siderail panel.
8. Unplug the cable connections from the inner siderail board and, using diagonal pliers, cut the cable ties securing the main cable.
9. Remove all four screws attached to the speaker and remove the speaker and cable clamp.
10. Using a 7/16” socket, remove the four screws (E) holding the head siderail hoop to the siderail support assembly.
11. Lift the head siderail hoop straight up and out.
12. Remove the inner siderail boards and reinstall on the new head siderail hoop.
13. Reverse steps 2-11 to install a new siderail hoop.

Return To Table of Contents

FOOTBOARD MODULE REMOVAL

TOOLS REQUIRED:

- #2 Phillips Screwdriver
- 1/4” Nut Driver

Note

Labels will need to be replaced.

PROCEDURE:

1. Remove the footboard assembly.
2. Remove the 11 screw cover labels.
3. Using a Phillips screwdriver, remove the 13 screws holding the back cover to the footboard.
4. Using a 1/4” nut driver, remove the six screws holding the center lens assembly in.
5. Unplug the cable connection from the module.

Note

If you have *i*Awareness, there are two other connections.

6. Lift the module out and replace.
7. Reverse the above steps to attach the replacement door and/or hinge.

Note

Screw (B) is a machine screw and must be reinstalled in the proper hole.

Return To Table of Contents

FOOTBOARD INTERFACE PLUG REPLACEMENT

TOOLS REQUIRED:

- #2 Phillips Screwdriver

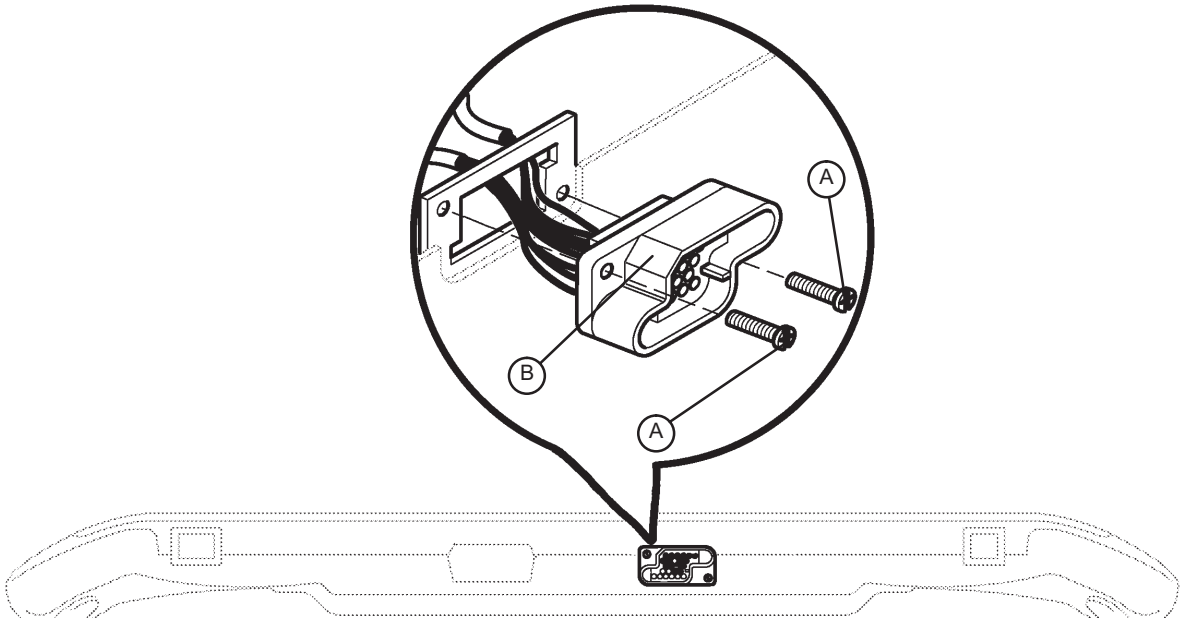

BOTTOM VIEW OF FOOT BOARD

PROCEDURE:

1. Remove the footboard assembly.
2. Remove the 11 screw cover labels.
3. Using a Phillips screwdriver, remove the 13 screws holding the back cover to the footboard.
4. Unplug the cable connection from the module.
5. Lift up on connector and replace.

CAUTION

Be sure to install the plug with the flat edge (B) at the top left, as shown in the illustration, or the footboard interface plug will not mate properly with the bed. Damage to the plug or the footboard could result.

Return To Table of Contents

CPU BOARD - 3006-308-900

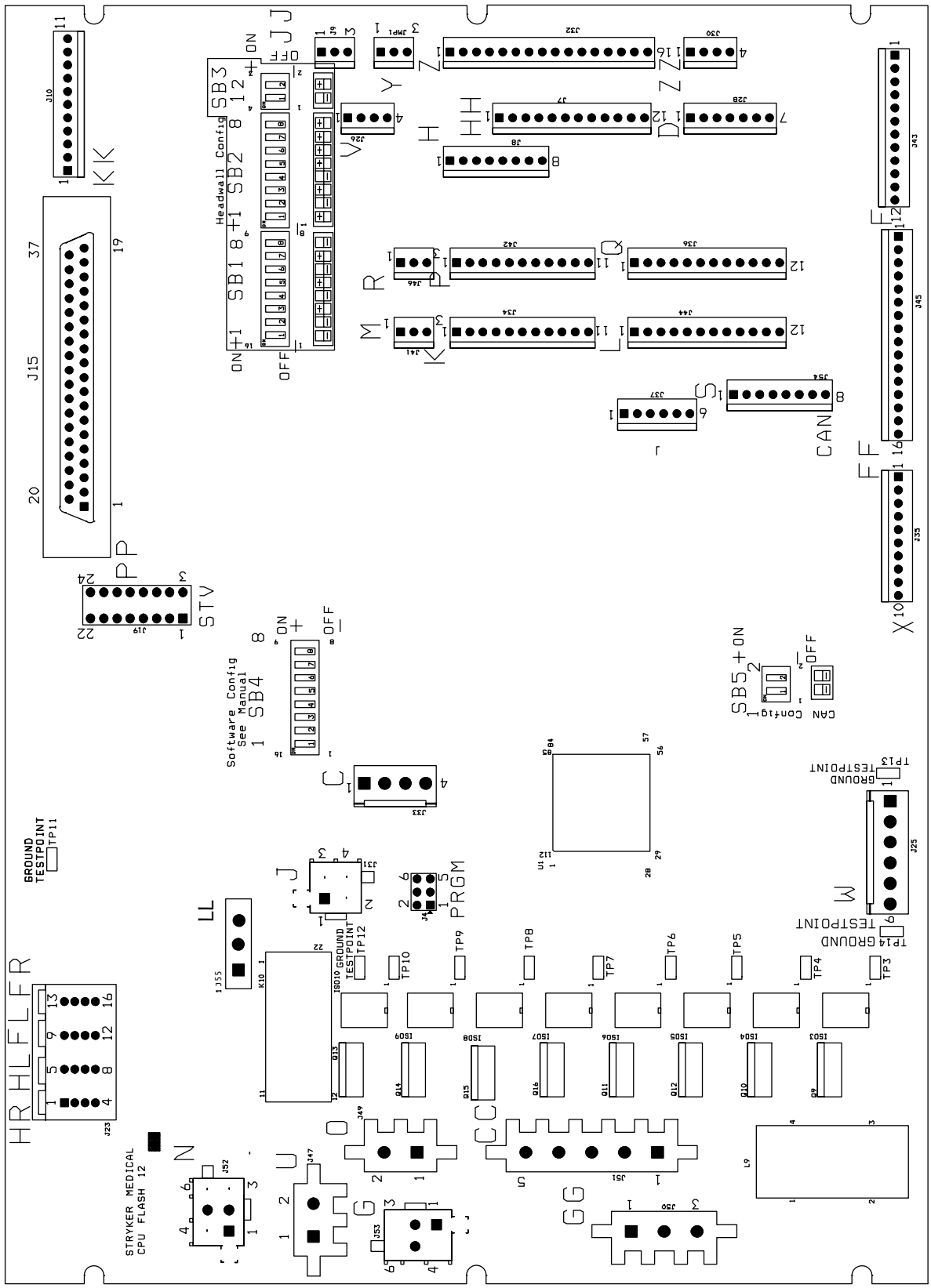

Return To Table of Contents

CPU BOARD - 3006-308-900 (CONTINUED)

Cable Location	Voltage	Positive Lead	Negative Lead	Description
W	+12VDC	Pin 1	Pin 4 or 5	Relays & Siderails Light Voltage
W	+5VDC	Pin 2 & 3	Pin 4 or 5	+5VDC from Power Supply
W	-12VDC	Pin 6	Pin 4 or 5	Relays & Siderails Light Voltage
J	+5VDC	Pin 4	Pin 2	+5VDC for Head Lift Potentiometer
J	0 - 5VDC	Pin 3	Pin 2	Head Lift Potentiometer Wiper
C	+5VDC	Pin 1	Pin 2	+5VDC for Foot Lift Potentiometer
C	0 - 5VDC	Pin 3	Pin 2	Foot Lift Potentiometer Wiper
GG	0VAC w/o Switch 120VAC w/Switch	Pin 2 Purple	Pin 1 Blue	Gatch Up
GG	0VAC w/o Switch 120VAC w/Switch	Pin 3 Red	Pin 1 Blue	Gatch Down
CC	0VAC w/o Switch 120VAC w/Switch	Pin 1 Black	Pin 3 Red	Fowler Up
CC	0VAC w/o Switch 120VAC w/Switch	Pin 2 White	Pin 3 Red	Fowler Down
O	110VAC	Pin 1	Pin 2	Line Voltage to Bed
N	0VAC w/o Switch 120VAC w/Switch	Pin 3 Black	Pin 1 White	Head Lift Down
N	0VAC w/o Switch 120VAC w/Switch	Pin 6 Red	Pin 1 White	Head Lift Up
G	0VAC w/o Switch 120VAC w/Switch	Pin 3 Black	Pin 1 Red	Foot Lift Down
G	0VAC w/o Switch 120VAC w/Switch	Pin 6 White	Pin 1 Red	Foot Lift Up

Return To Table of Contents

SOFTWARE CONFIGURATION

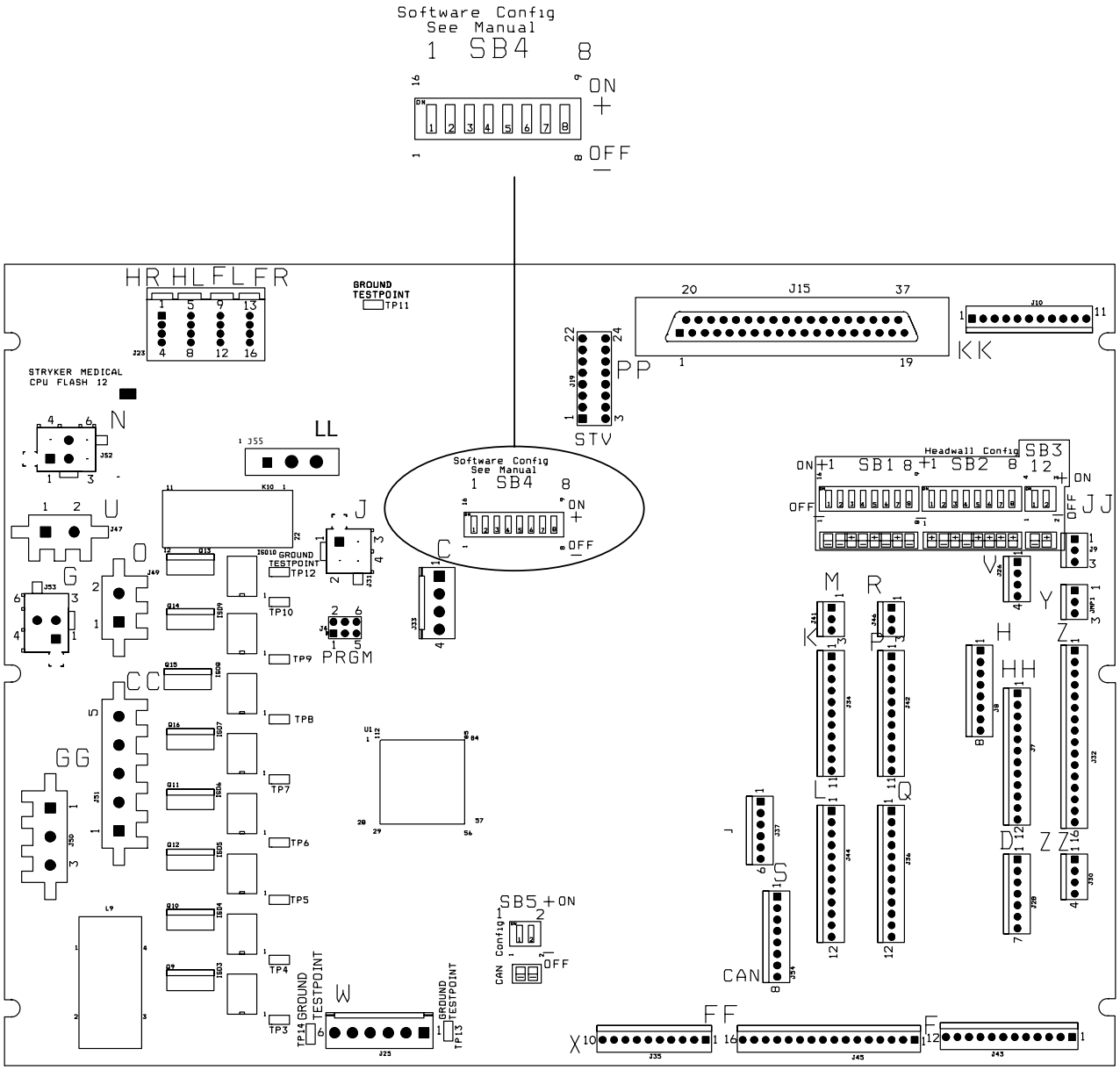

1. Locate switch bank 4, labeled SB4 on the CPU board (see above).
2. Move switch one to the “ON” position (see below).
3. To verify the switch settings, check what the footboard LCD displays.

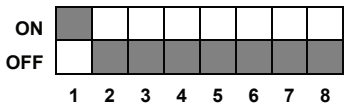

General Setting, S3™ Bed

Return To Table of Contents

POWER SUPPLY - 0059-157-000

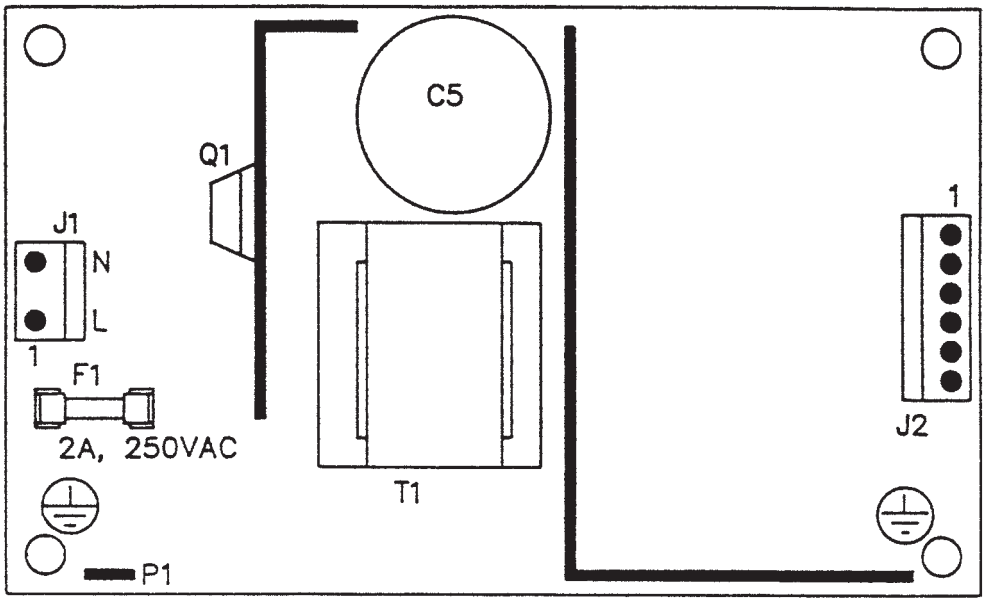

Connector Location	Voltage	Positive Lead	Negative Lead
J1	115V	Pin 1	Pin 2
J2	12V	Pin 1	Pin 4 or 5
J2	5V	Pin 2	Pin 4 or 5
J2	5V	Pin 3	Pin 4 or 5
J2	GND	Pin 4	Pin 4 or 5
J2	GND	Pin 5	Pin 4 or 5
J2	-12V	Pin 6	Pin 4 or 5

Return To Table of Contents

BATTERY BACKUP/ZOOM® OPTION, INVERTER/CHARGER BOARD - 3002-001-030

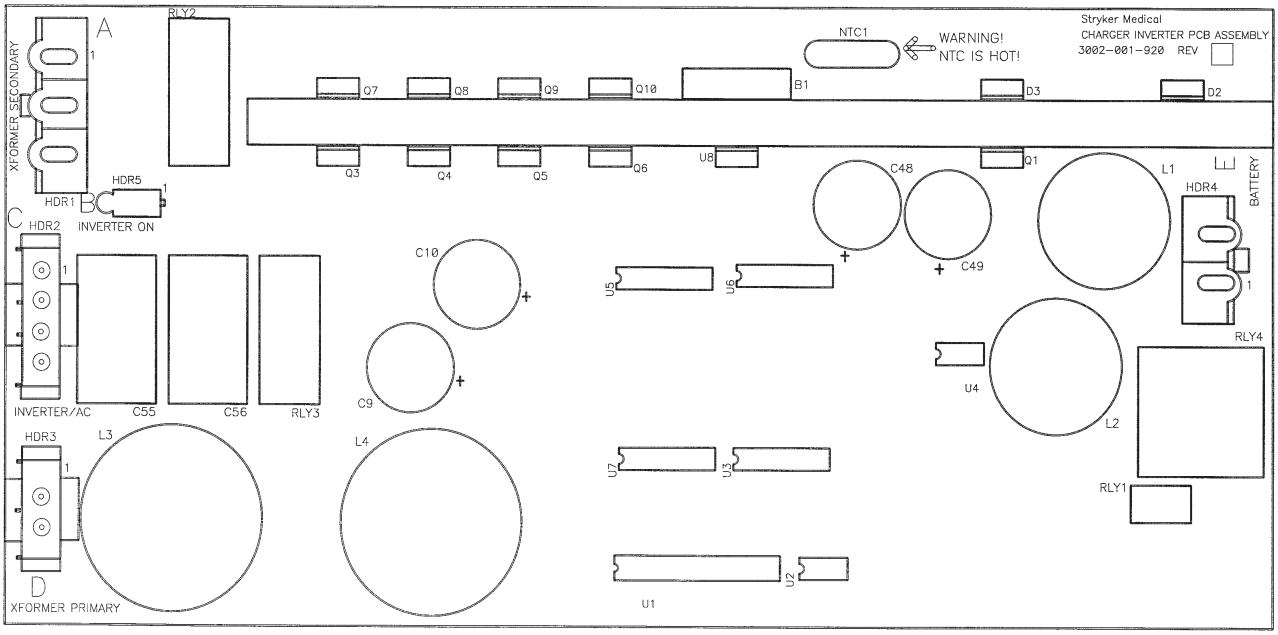

Connector Location	Voltage	Positive Lead	Negative Lead	Description
HDR 4	26VDC	Pin 2 Red	Pin 1 Black	From Battery - unplugged
HDR 1	22VAC	Pin 3 Red	Pin 2	Secondarys from transformer - plugged in
HDR 1	34VAC	Pin 1 Green	Pin 2 Brown	Secondarys from transformer - plugged in
HDR 2	110-140VAC	Pin 4 Brown	Inverter Module Pin 3 Blue	Unplugged
HDR 2	110V	Pin 2 Brown	Pin 1 Blue	From Wall - plugged in
HDR 3	120V	Pin 2	Plug-in Pin 1	Wall Voltage - plugged in

Return To Table of Contents

BATTERY BACKUP/ZOOM® OPTION, AC CROSSOVER BOARD - 2040-031-900

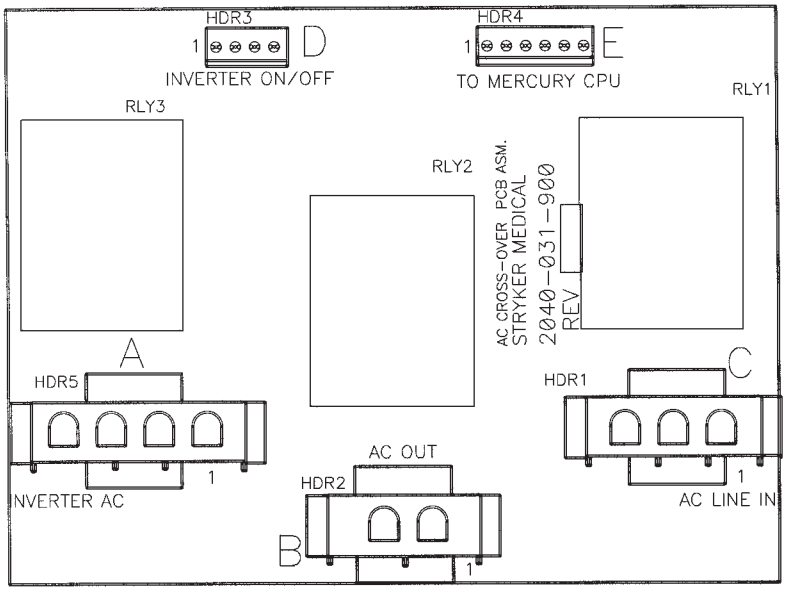

Connector Location	Voltage	Positive Lead	Negative Lead	Description
HDR 5 (A)	120VAC	Pin 4	Pin 1	AC Input to Board from the Inverter with the Power Cord Unplugged
HDR 1 (C)	120VAC	Pin 3	Pin 1	AC Input to Board from the Wall Receptacle
HDR 2 (B)	120VAC	Pin 2	Pin 1	AC Output of Board to Main Power
HDR 4 (E)	+5VDC	Pin 4	Pin 1	+5VDC when AC is Unplugged from the Wall Receptacle

Return To Table of Contents

BATTERY BACKUP OPTION, DISPLAY/CPU - 2030-031-910

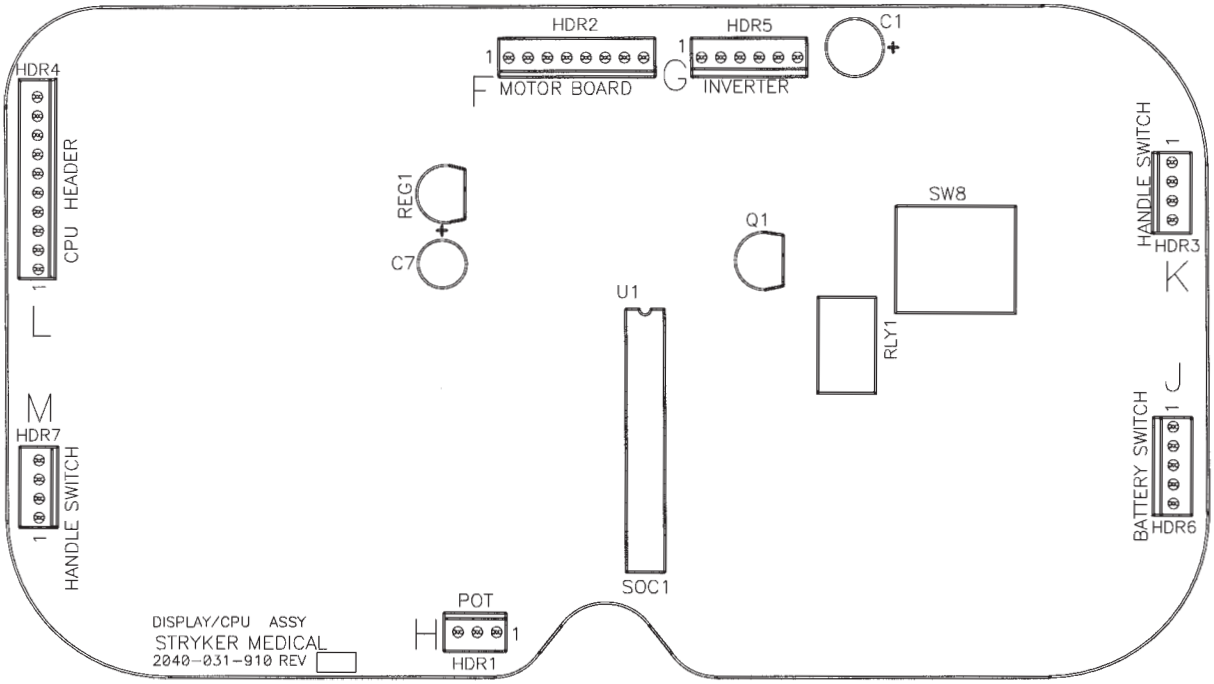

Connector Location	Voltage	Positive Lead	Negative Lead	Description
HDR 1 (H)	0-5 VDC	Pin 1	Pin 2	Control Pot Wiper Voltage (with Switch On)
HDR 6 (J)	Battery voltage around 26 VDC	Pin 1	Pin 5	Battery Voltage Return from On/Off Switch (with Switch On)
HDR 4 (L)	5 VDC	Pin 9	Pin 1	Voltage from CPU
HDR 1	5 VDC	Pin 1	Pin 3	DC Voltage to Pot
HDR 7	Continuity	Pin 1	Pin 4	Right Hand Switch
HDR 3	Continuity	Pin 1	Pin 4	Left Hand Switch
HDR 2	26 VDC	Pin 3	Pin 1	Battery Voltage

Return To Table of Contents

ZOOM® OPTION, DISPLAY/CPU - 2040-031-910

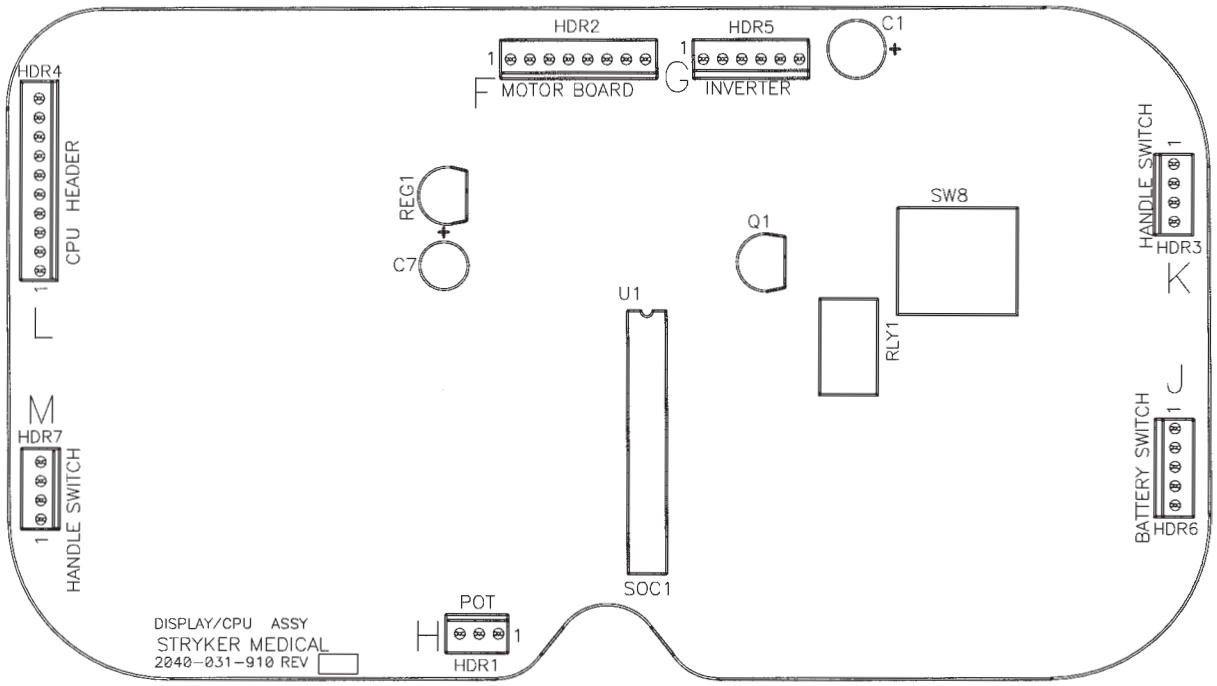

Connector Location	Voltage	Positive Lead	Negative Lead	Description
HDR 1 (H)	0-5VDC	Pin 1	Pin 2	Control Potentiometer Wiper Voltage (with Switch On)
HDR 6 (j)	Battery voltage around 26VDC	Pin 1	Pin 5	Battery Voltage Return from On/ Off Switch (with Switch On)
HDR 4 (L)	5VDC	Pin 9	Pin 1	Voltage from CPU
HDR 1	5VDC	Pin 1	Pin 3	DC Voltage to Potentiometer
HDR 7	Continuity	Pin 1	Pin 4	Right Hand Switch
HDR 3	Continuity	Pin 1	Pin 4	Left Hand Switch
HDR 2	26VDC	Pin 3	Pin 1	Battery Voltage

Return To Table of Contents

ZOOM® OPTION, DC MOTOR POWER BOARD - 2040-001-900

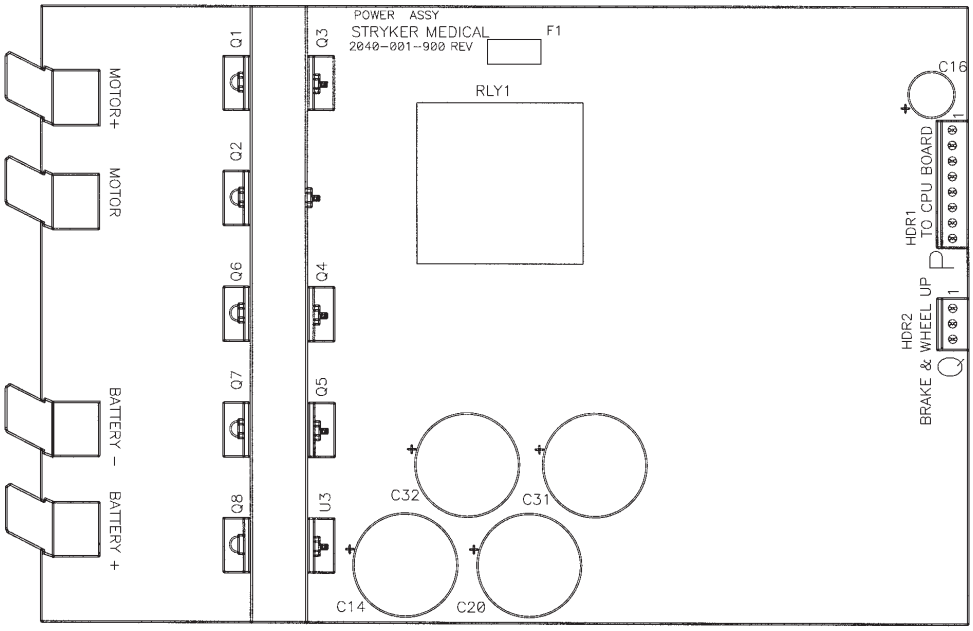

Connector Location	Voltage	Positive Lead	Negative Lead	Description
HDR 1 (P)	Battery voltage around 26VDC	Pin 3 Red	Pin 1 Black	Battery Voltage out to the Display/ CPU Board
HDR 2 (Q)	5VDC Disengaged 0VDC Engaged	Pin 1 Red	Pin 3 Black	Drive Wheel
HDR 2 (Q)	5VDC Disengaged 0VDC Engaged	Pin 2 Red	Pin 3 Black	Brakes

Return To Table of Contents

*i*BED ENHANCED NURSE CALL OPTION, 37-PIN PLUGOVER BOARD - 3006-303-900

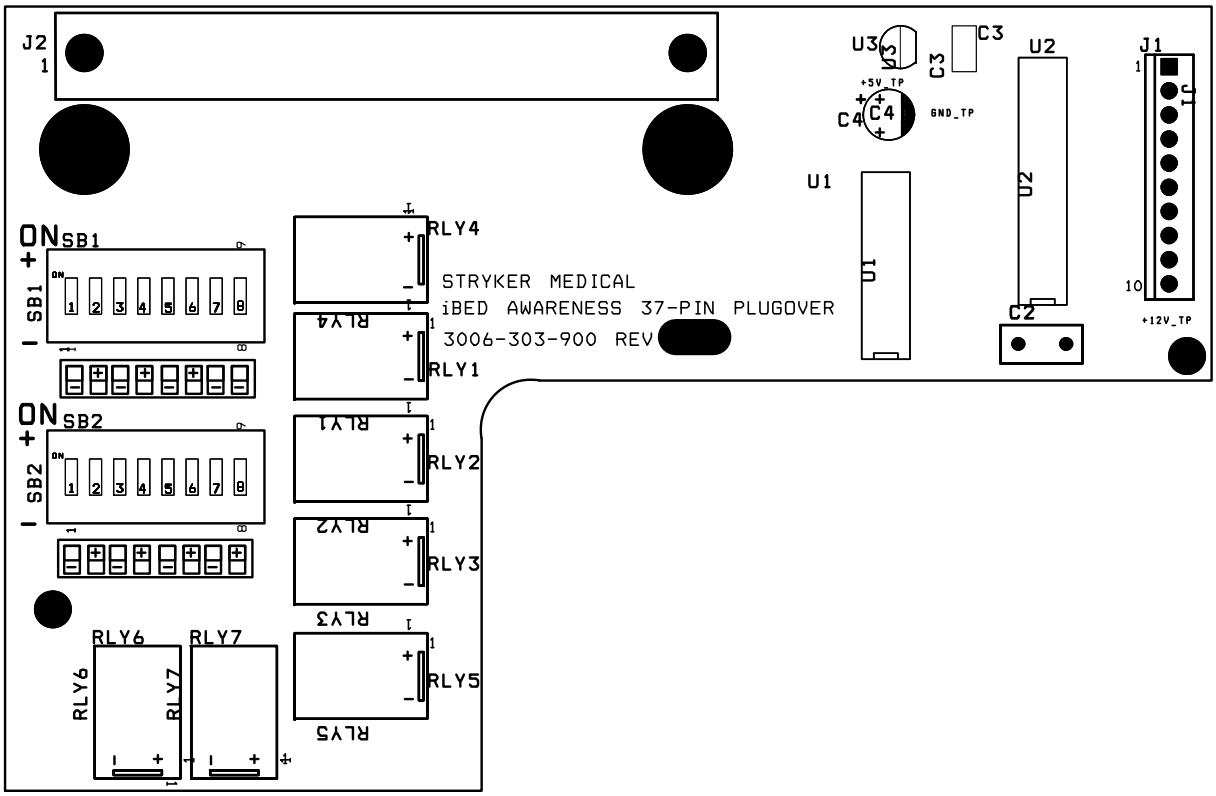

*i*BED ENHANCED NURSE CALL OPTION, DIP-SWITCH SETTINGS (DEFAULT)

For Reference Only: SK-31628 Rev C

Headwall Function	Default Position	Alternate Position	Alternate Position
Side Rail Alert (SB2):SW3, SW4 (Select N.O. N.C. or OFF)	SB2 ON OFF 1 2 3 4 5 6 7 8 N.O. ☐ (Check Here)	SB2 ON OFF 1 2 3 4 5 6 7 8 N.C. ☐ (Check Here)	SB2 ON OFF 1 2 3 4 5 6 7 8 OFF ☐ (Check Here)
Fowler 30 Alert (SB2): SW5, SW6 (Select N.O. N.C. or OFF)	SB2 ON OFF 1 2 3 4 5 6 7 8 N.O. ☐ (Check Here)	SB2 ON OFF 1 2 3 4 5 6 7 8 N.C. ☐ (Check Here)	SB2 ON OFF 1 2 3 4 5 6 7 8 OFF ☐ (Check Here)
Low Height Alert (SB2): SW7, SW8 (Select N.O. N.C. or OFF)	SB2 ON OFF 1 2 3 4 5 6 7 8 N.O. ☐ (Check Here)	SB2 ON OFF 1 2 3 4 5 6 7 8 N.O. ☐ (Check Here)	SB2 ON OFF 1 2 3 4 5 6 7 8 OFF ☐ (Check Here)

Return To Table of Contents

*i*BED ENHANCED NURSE CALL OPTION, DIP-SWITCH SETTINGS (CONTINUED)

Headwall Function	Default Position	Alternate Position	Alternate Position
I Bed ON (SB1): SW1, SW2 (Select N.O. N.C. or OFF)	SB1 ON OFF 1 2 3 4 5 6 7 8 N.O. ☐ (Check Here)	SB1 ON OFF 1 2 3 4 5 6 7 8 N.C. ☐ (Check Here)	SB1 ON OFF 1 2 3 4 5 6 7 8 OFF ☐ (Check Here)
Brakes ON (SB1): SW3, SW4 (Select N.O. N.C. or OFF)	SB1 ON OFF 1 2 3 4 5 6 7 8 N.O. ☐ (Check Here)	SB1 ON OFF 1 2 3 4 5 6 7 8 N.C. ☐ (Check Here)	SB1 ON OFF 1 2 3 4 5 6 7 8 OFF ☐ (Check Here)
Bed Exit ON (SB1): SW5, SW6 (Select N.O. N.C. or OFF)	SB1 ON OFF 1 2 3 4 5 6 7 8 N.O. ☐ (Check Here)	SB1 ON OFF 1 2 3 4 5 6 7 8 N.C. ☐ (Check Here)	SB1 ON OFF 1 2 3 4 5 6 7 8 OFF ☐ (Check Here)
Not Used (SB1): SW7, SW8 (Do Not Select)	SB1 ON OFF 1 2 3 4 5 6 7 8		
I Bed Alert (SB2): SW1, SW2 (Select N.O. N.C. or OFF)	SB1 ON OFF 1 2 3 4 5 6 7 8 N.O. ☐ (Check Here)	SB1 ON OFF 1 2 3 4 5 6 7 8 N.C. ☐ (Check Here)	SB1 ON OFF 1 2 3 4 5 6 7 8 OFF ☐ (Check Here)

Return To Table of Contents

Head Wall Output Configuration

37-Pin Connector

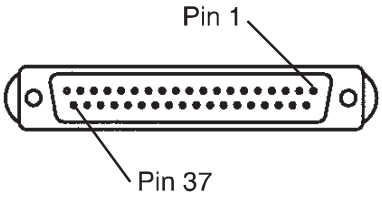

Pin 1	*i*Bed® Awareness Status On
Pin 2	Read Light
Pin 3	Room Light
Pin 4	Speaker High
Pin 5	Potentiometer Wiper
Pin 6	Bed Exit Status On
Pin 7	Nurse Call Interlock
Pin 8	Audio Transfer -
Pin 9	Audio Transfer +
Pin 10	Interlock +
Pin 11	Interlock -
Pin 12	*i*Bed® Awareness Fowler 30˚ Alert
Pin 13	No Connect
Pin 14	Potentiometer Low Common
Pin 15	Potentiometer High Common (Std.)/Audio (STV)
Pin 16	Nurse Answer Light +
Pin 17	*i*Bed® Awareness Alert
Pin 18	*i*Bed® Awareness Siderail Alert
Pin 19	Nurse Call Light +
Pin 20	No Connect
Pin 21	No Connect
Pin 22	No Connect
Pin 23	Brake Status On
Pin 24	No Connect
Pin 25	Nurse Call +
Pin 26	Nurse Call NO/NC
Pin 27	Room/Read Light Common
Pin 28	Nurse Call Light -
Pin 29	Nurse Answer Light -
Pin 30	Priority NO/NC
Pin 31	Priority Common
Pin 32	*i*Bed® Awareness Low Height Alert
Pin 33	TV - (Std.)/Data (STV)
Pin 34	TV + (Std.)/Common (STV)
Pin 35	Speaker Low Common
Pin 36	Audio Shield
Pin 37	*i*Bed® Awareness Common

Stryker Pendant Port

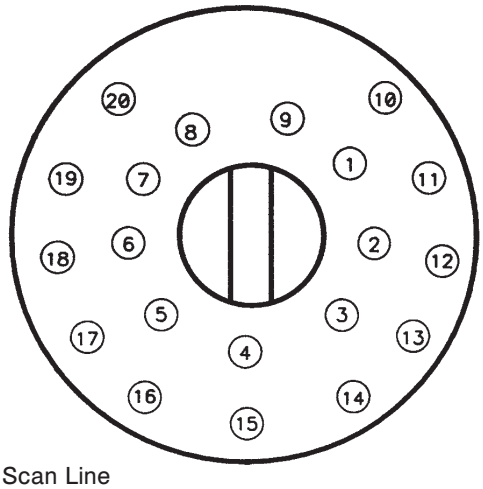

1	Scan Line
2	Audio (-)
3	Nurse Call (+)
4	+5 VDC
5	Scan Line
6	Scan Line
7	Nurse Call (-)
8	TV Channel Up
9	Backlight
10	Audio (+)
11	Gatch Up/Fowler In/Foot Up/DMS Firm
12	Gatch Down/Fowler Out/Foot Out/DMS Soft
13	Fowler Up/Trend In
14	Fowler Down/Trend Out
15	Audio Shield
16	Not Used - Socket Filled
17	Bed Up
18	Ground
19	Read Light/Bed Down
20	Room Light

Return To Table of Contents

Battery Backup/Zoom® Option Inverter Protection Features

The inverter has several features to prevent internal damage:

1. Low Battery Voltage - If the battery voltage at the inverter drops below the low voltage cutoff, the inverter will shut off.
2. Over-Temperature - If the inverter gets too hot, it will shut off. The overheating may be caused by high ambient temperature, blocked air flow or an overload condition. When the inverter reaches an acceptable temperature, it will restart.
3. Over-Power - The inverter will source up to its maximum power rating. If the load requires more, the output voltage will shut down. Turning the power switch off and on will reset the inverter. Plugging the bed power cord into the wall socket to charge the battery will reset the inverter.

WARNING

The inverter generates 115VAC, the same as a wall receptacle. To prevent injury, do not put anything into the electrical outlets other than an appliance power cord. Keep the outlets covered when not in use. Do not submerge the unit or subject it to moisture.

Return To Table of Contents

Bed Assembly, Standard Bed

For Reference Only: 3006-043-102

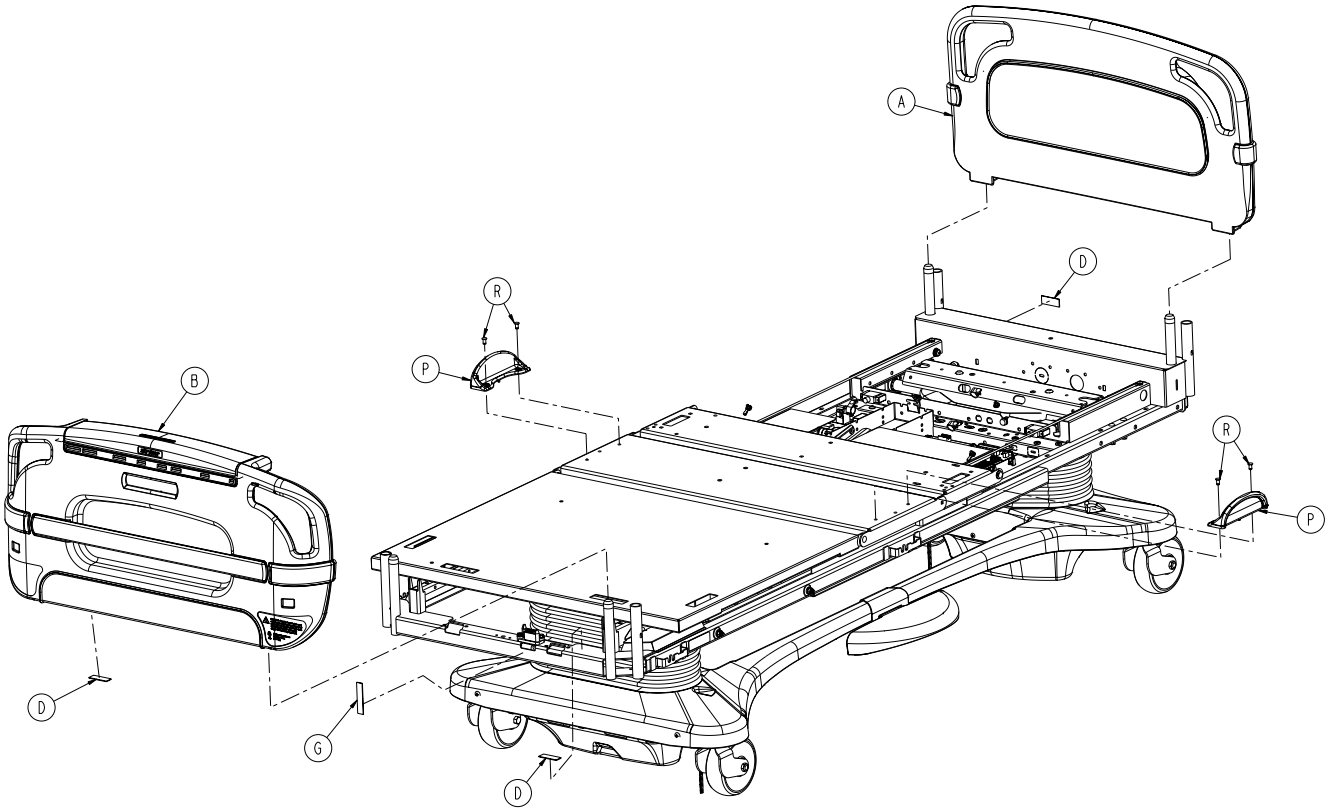

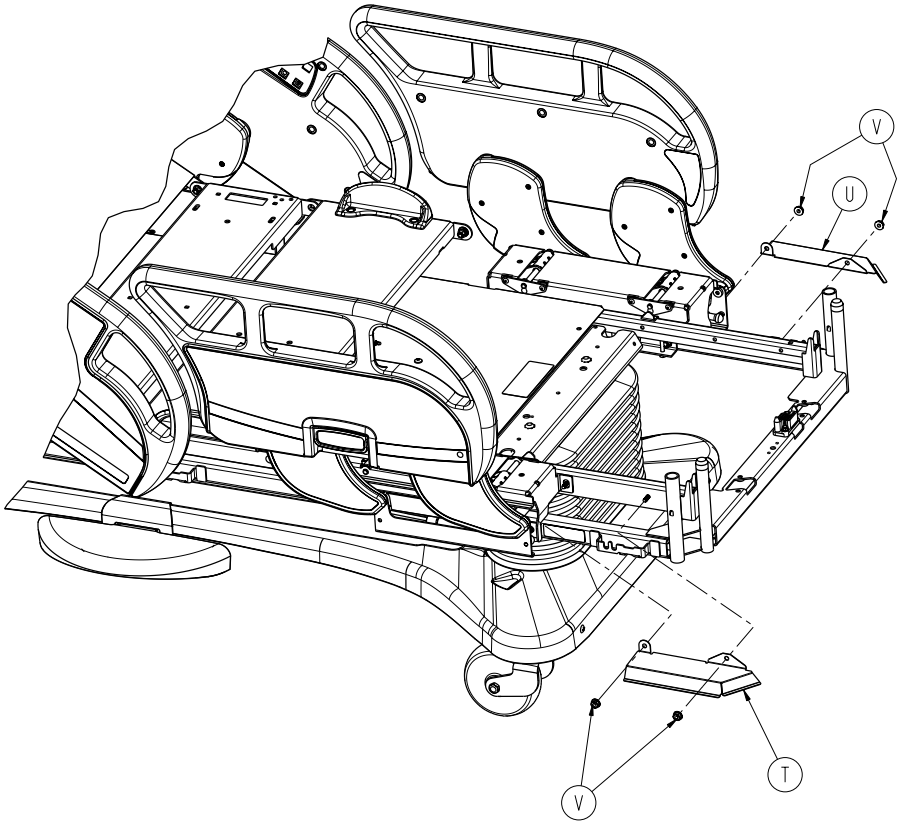

Return To Table of Contents

Bed Assembly, Standard Bed

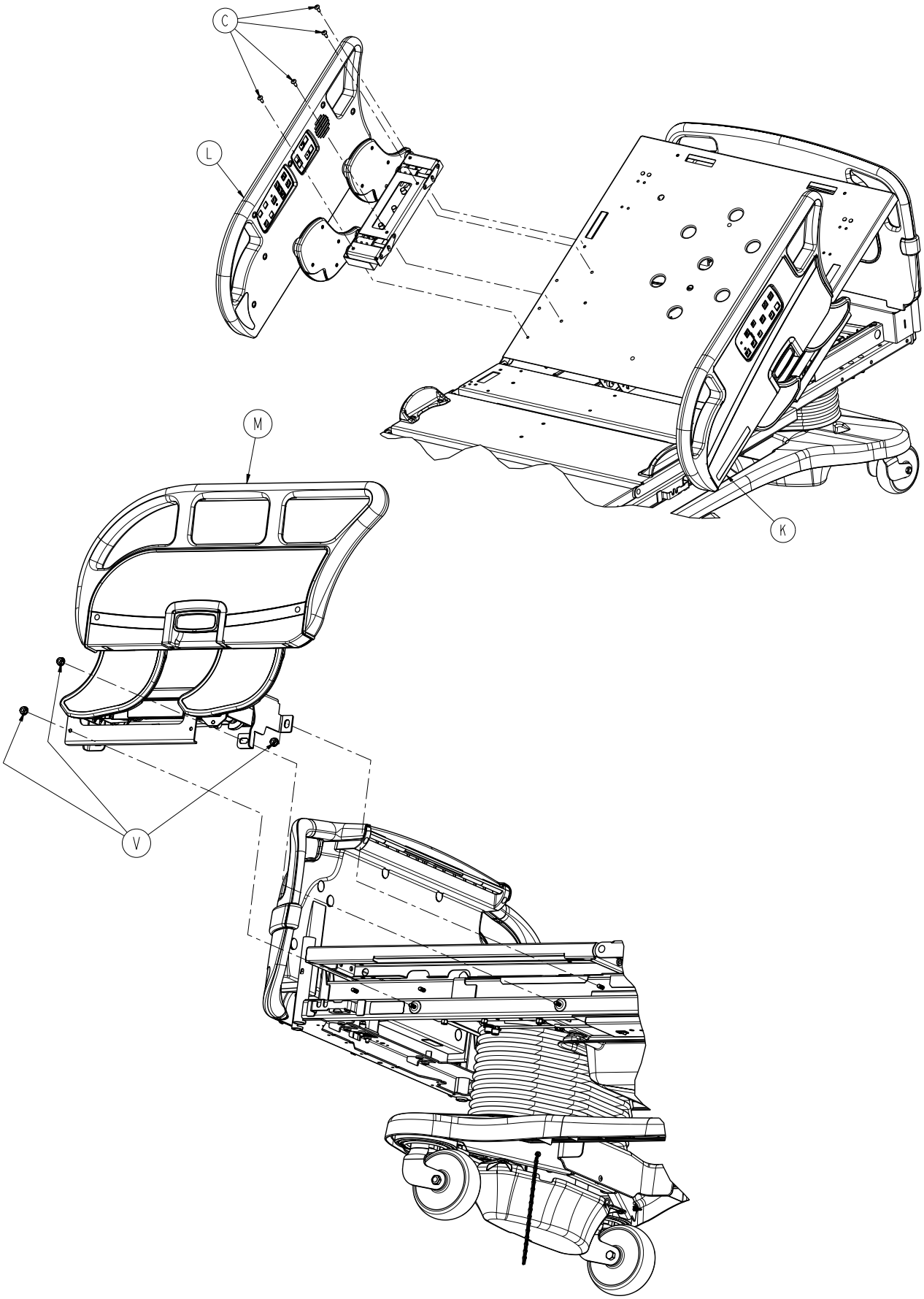

Return To Table of Contents

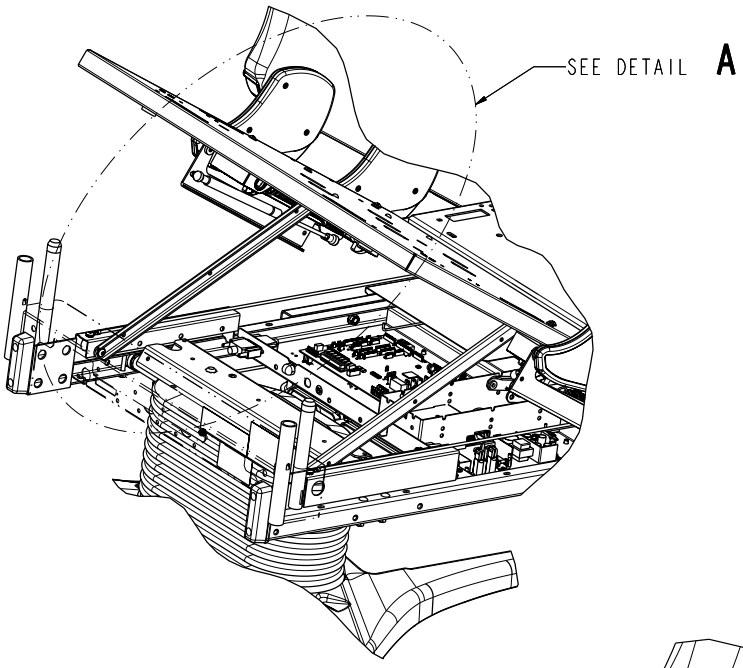

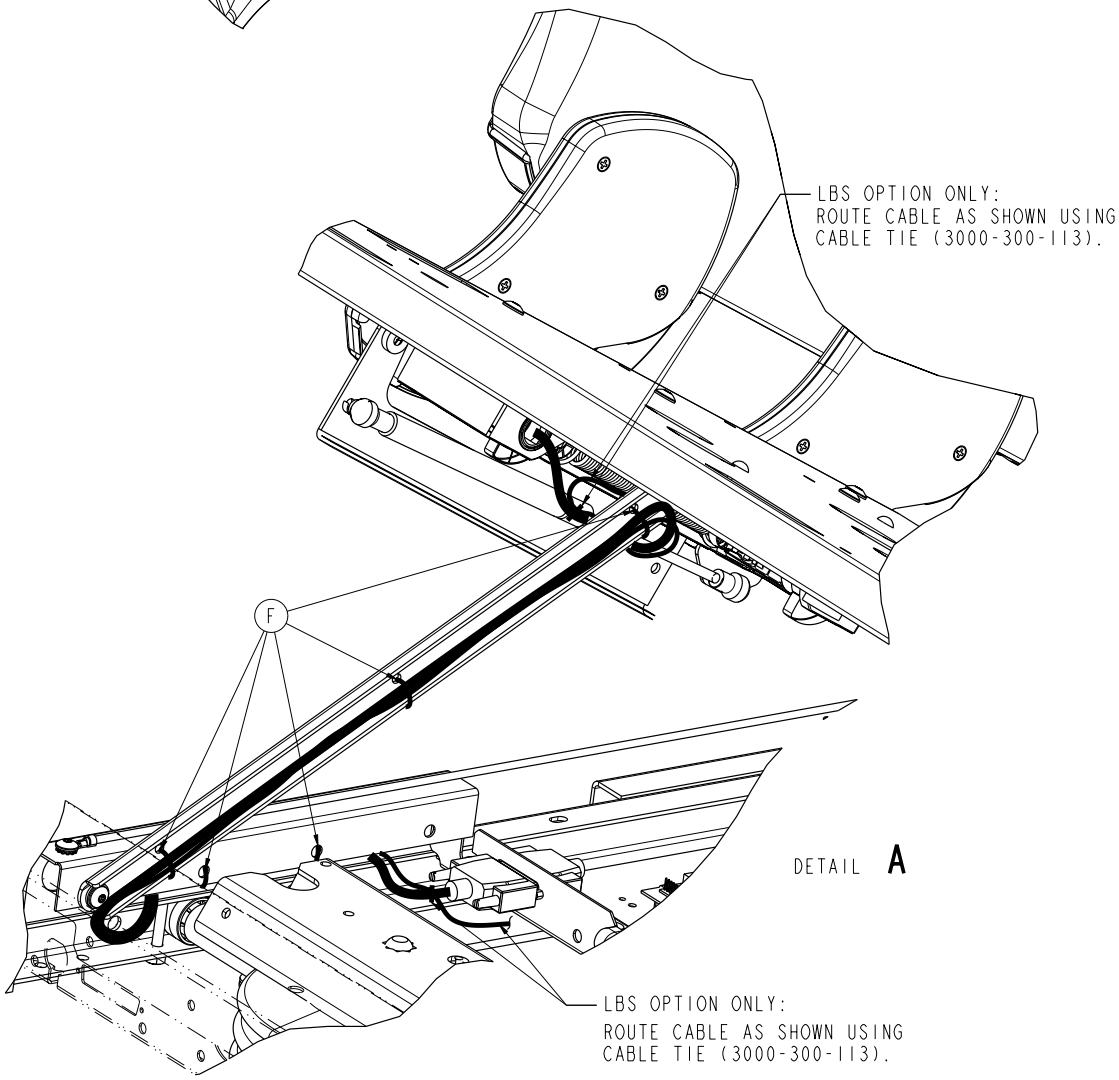

Return To Table of Contents

Bed Assembly, Standard Bed

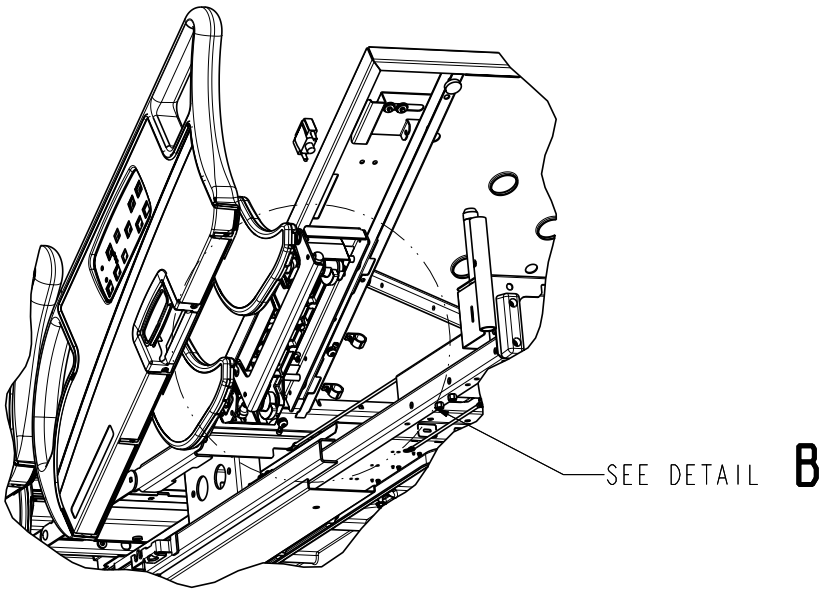

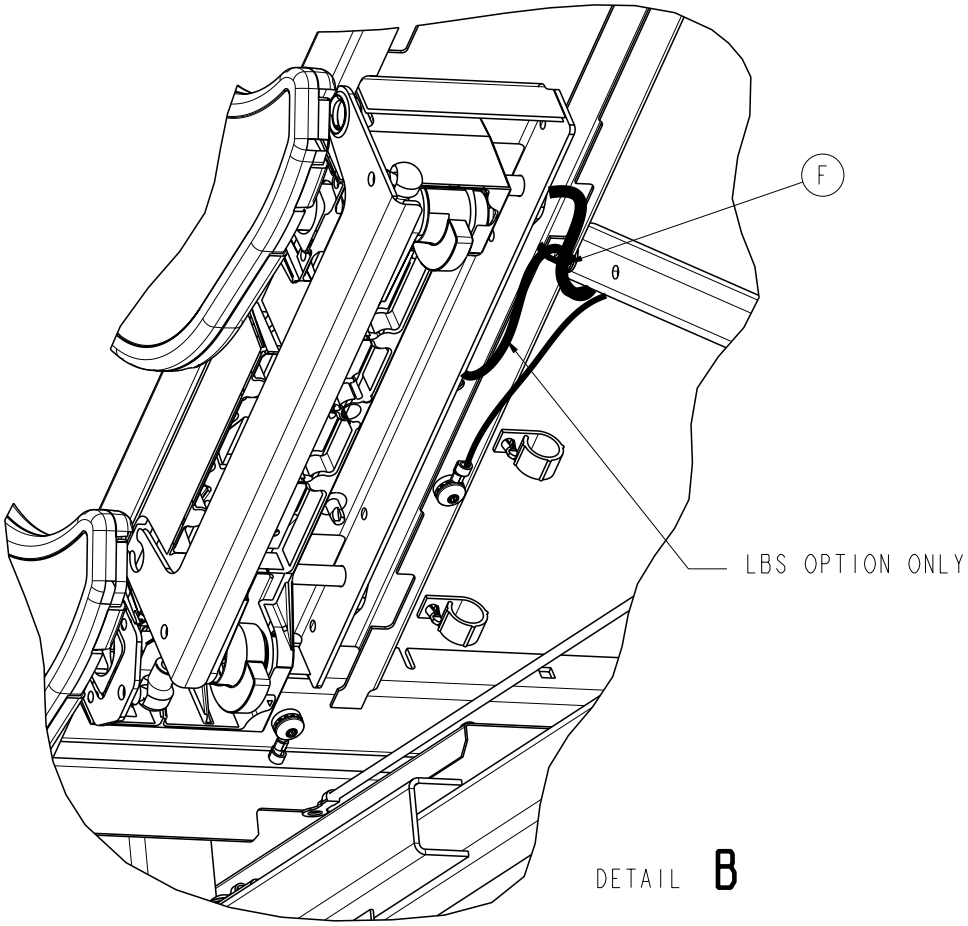

Return To Table of Contents

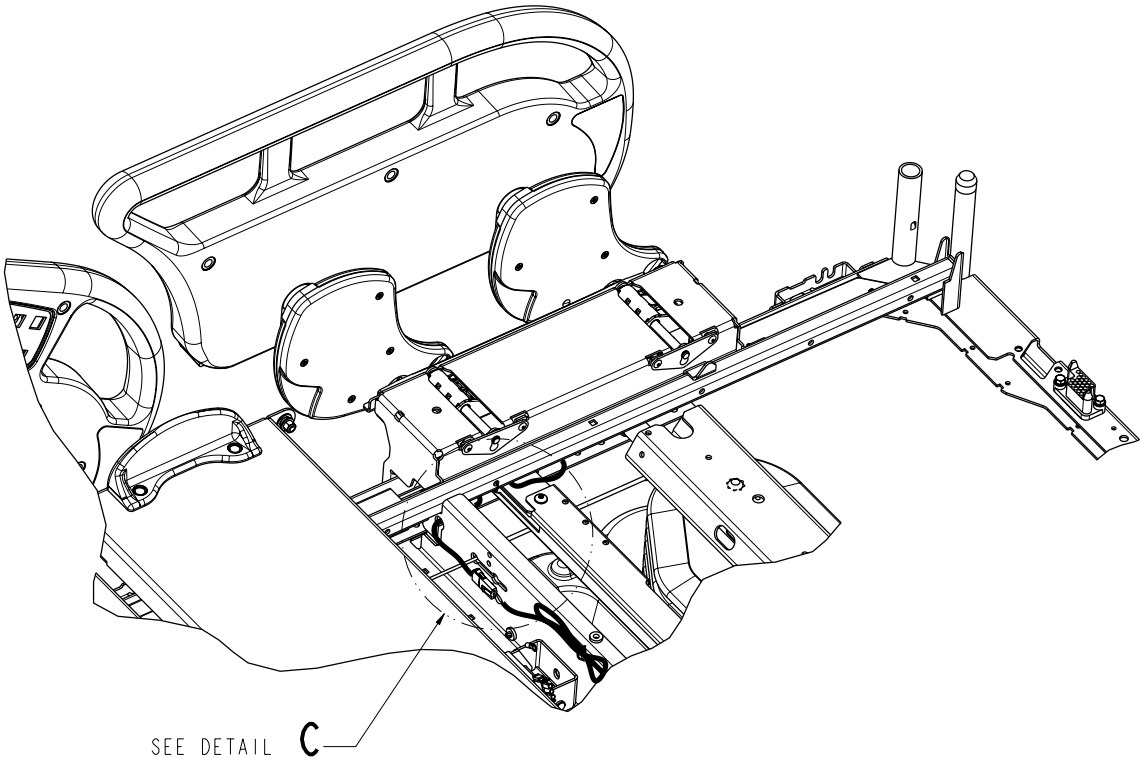

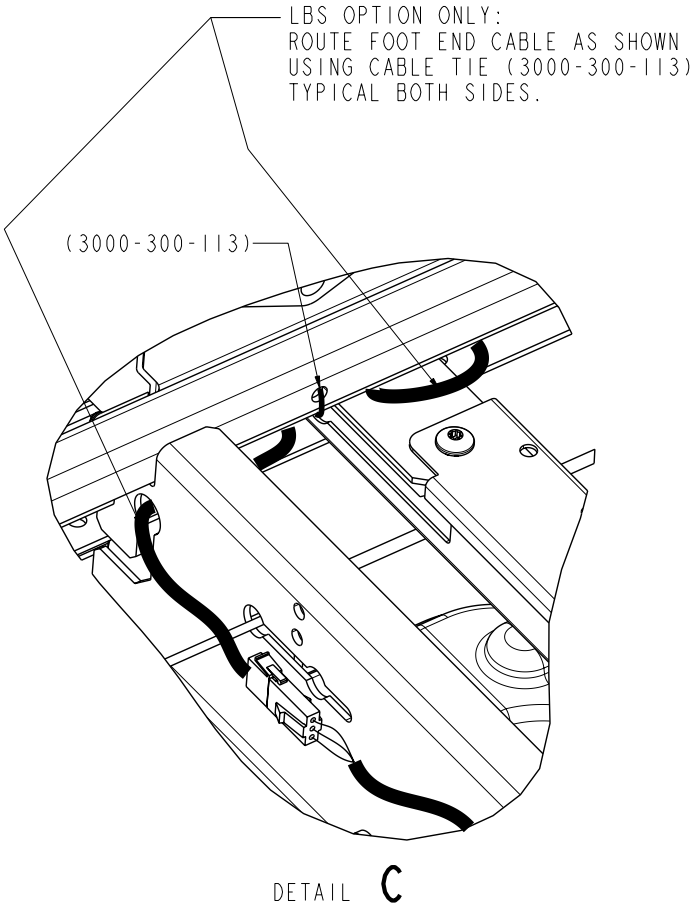

Return To Table of Contents

Bed Assembly, Standard Bed, Components - 3006-043-102 (Reference Only)

Item	Part No.	Part Name	Qty.
A	3006-600-010	Head Board Assembly	1
B	3006-501-000	Footboard Assembly, Standard Components	1
C	0007-065-000	Truss Head Screw	8
D	3000-300-625	Date of Manufacture Label	1
F	3000-300-113	8” Cable Tie	12
G	3000-300-641	Footboard Ground Label	1
J	3006-343-002	Litter Assembly	1
K	3006-400-105	HE Siderail Assembly, Left	1
L	3006-400-205	HE Siderail Assembly, Right	1
M	3006-400-300	FE Siderail Assembly, Left	1
N	3006-400-400	FE Siderail Assembly, Right	1
P	3006-300-033	Mattress Retainer	2
R	0025-120-000	Rivet	4
T	3006-300-275	Shield, Right	1
U	3006-300-276	Shield, Left	1
V	0158-083-000	Flange Nut	10

Return To Table of Contents

Bed Assembly, Battery Backup Option

For Reference Only: 3006-350-000

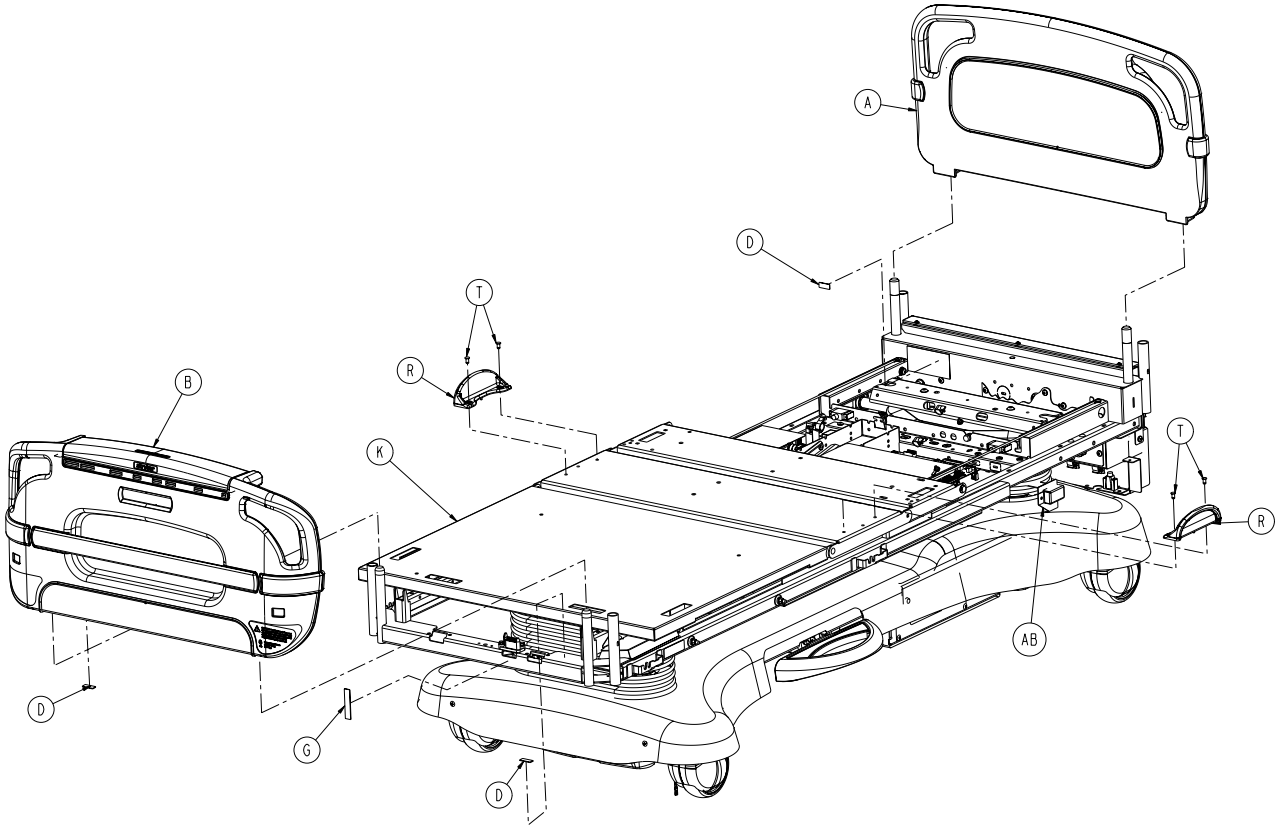

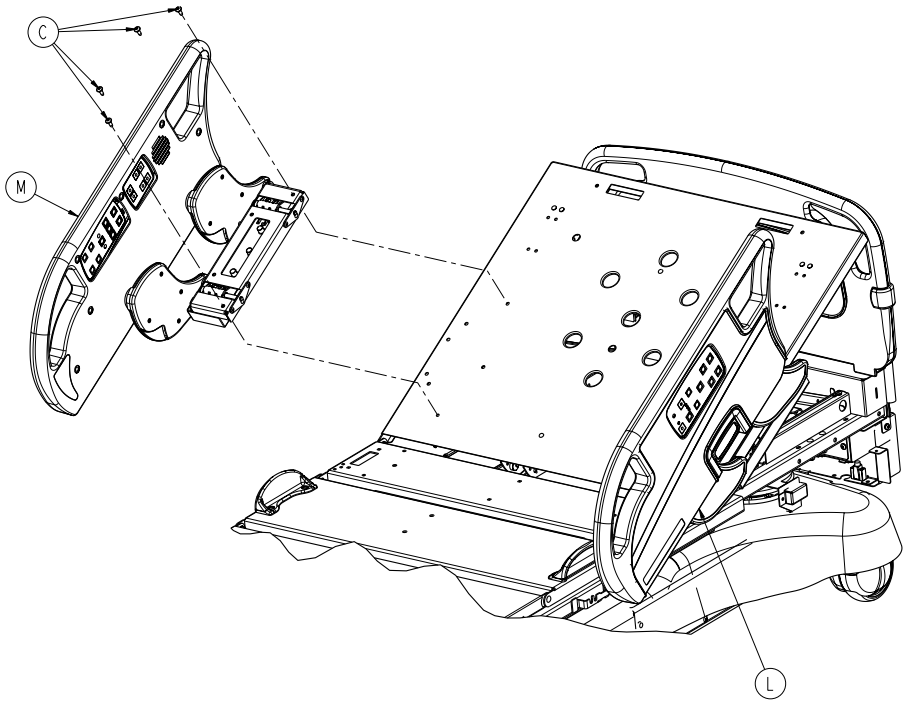

Return To Table of Contents

Bed Assembly, Battery Backup Option

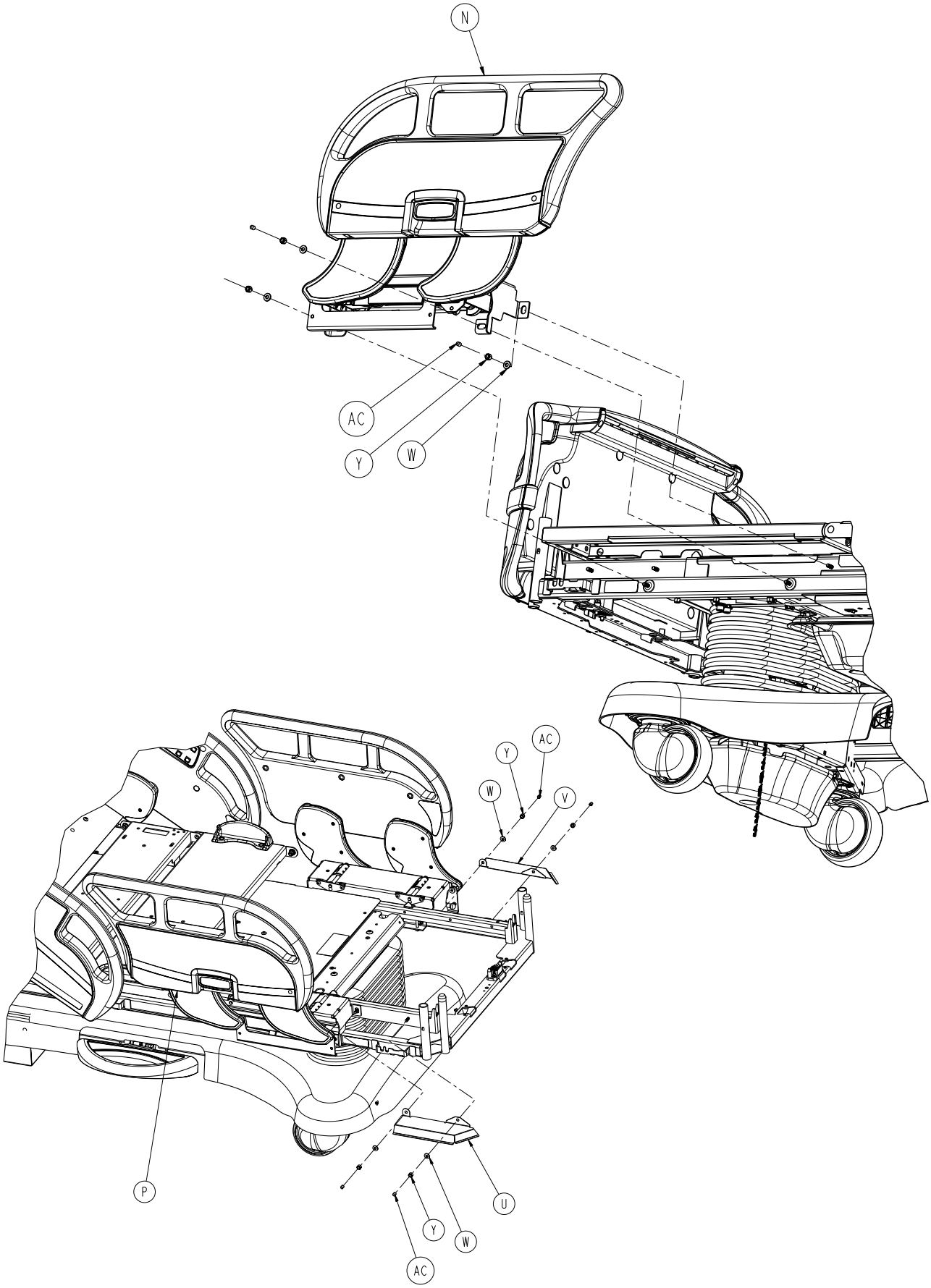

Return To Table of Contents

Bed Assembly, Battery Backup Option

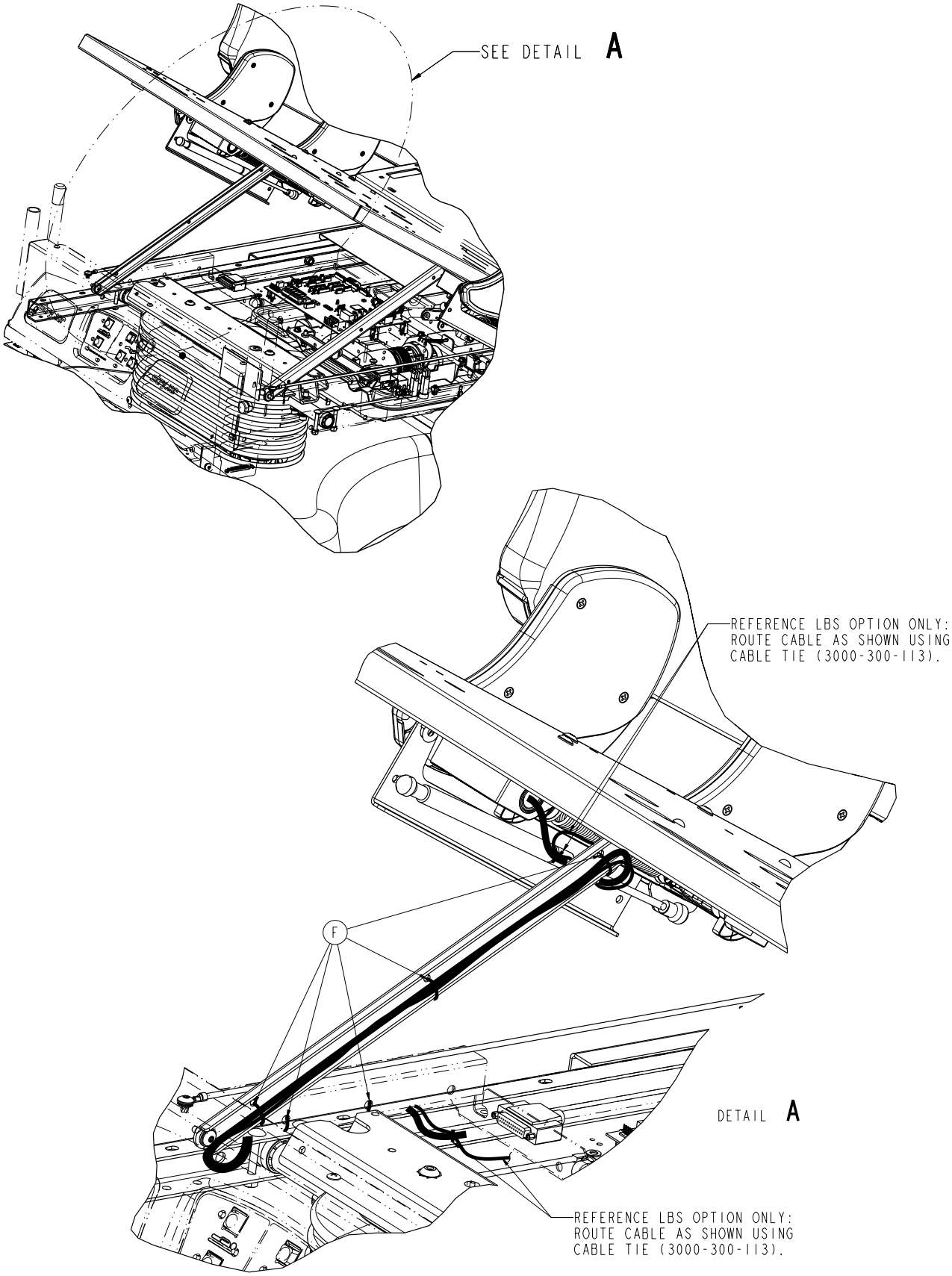

Return To Table of Contents

Bed Assembly, Battery Backup Option

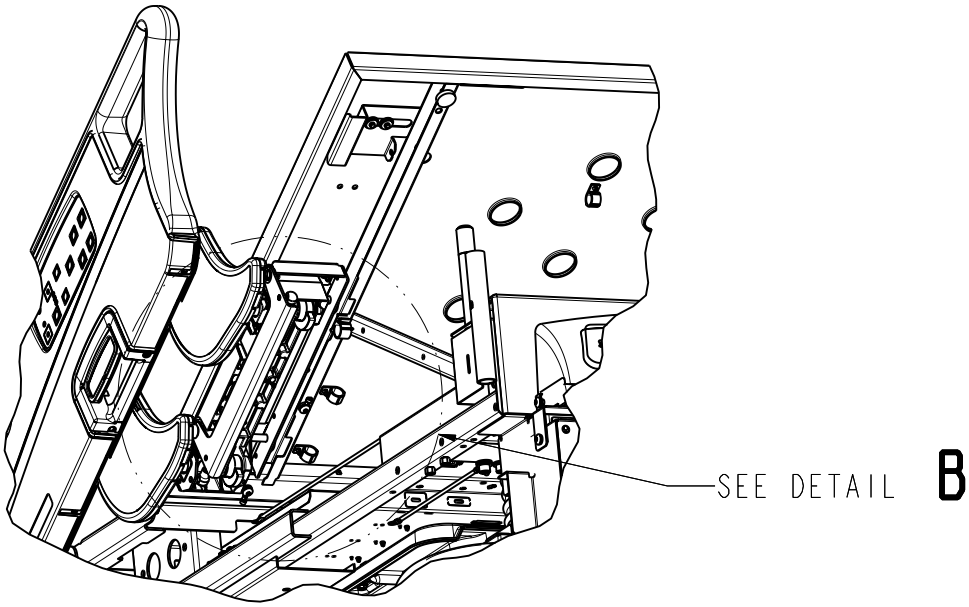

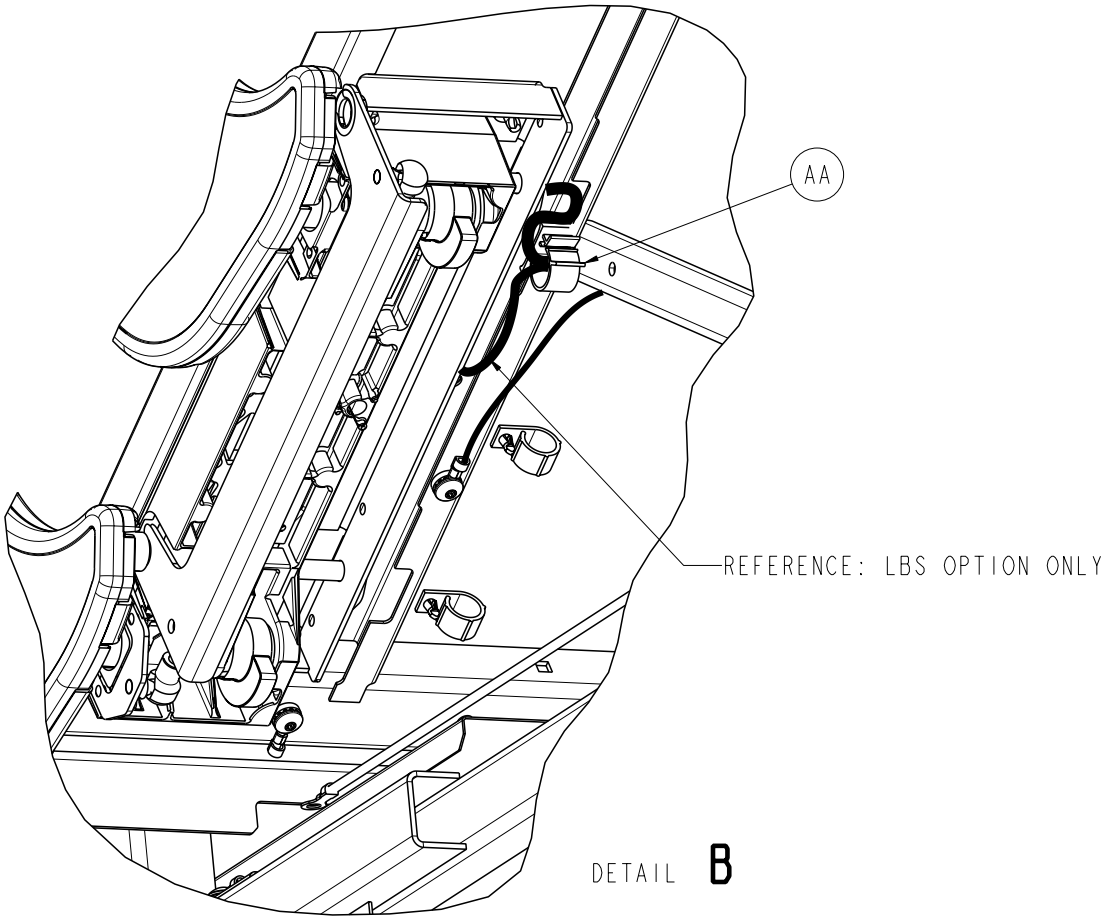

Return To Table of Contents

Bed Assembly, Battery Backup Option

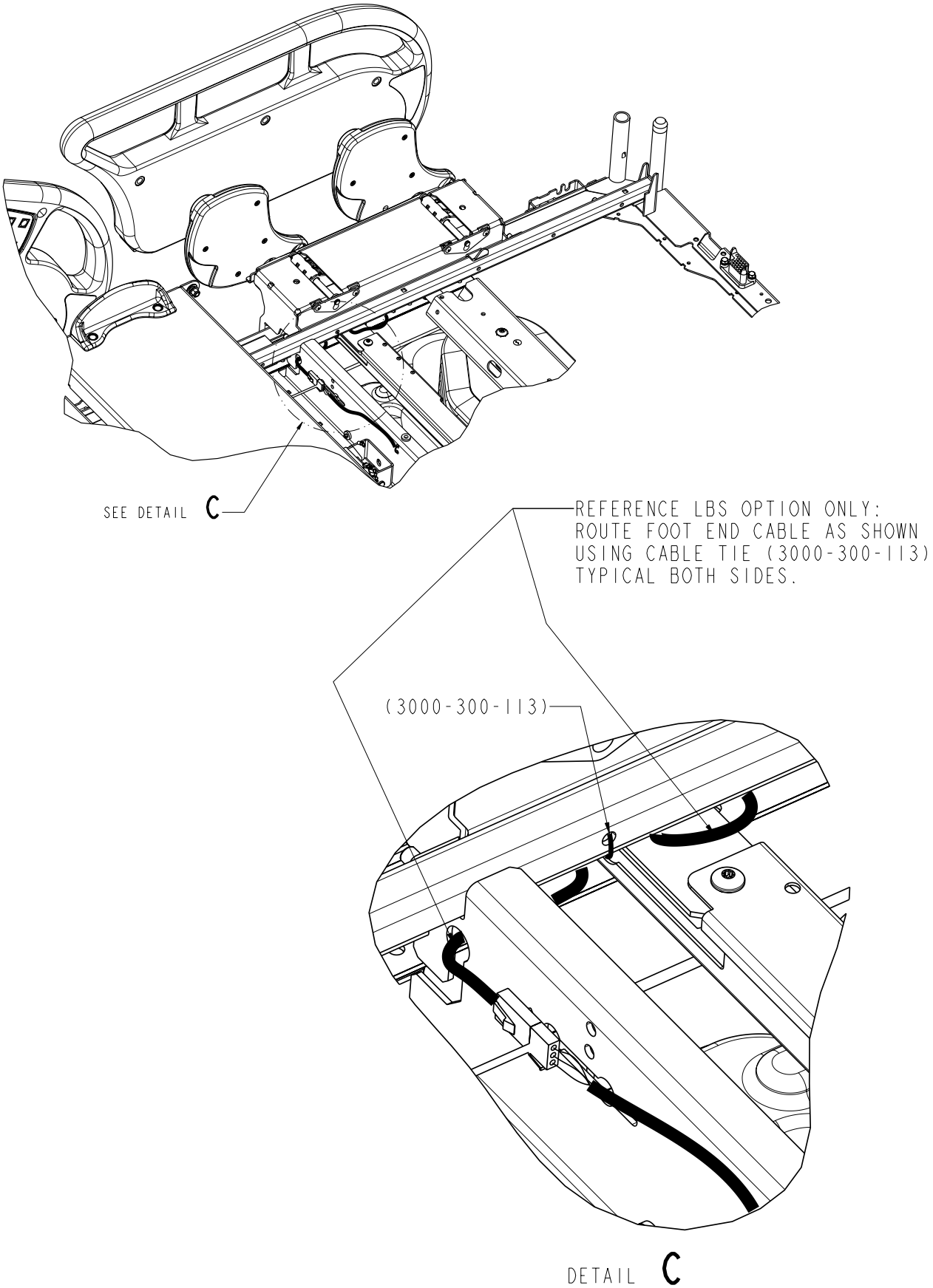

Return To Table of Contents

Battery Backup Option Components - 3006-350-000 - (Reference Only)

item	Part No.	Part Name	Qty.
A	3006-600-010	Headboard Assembly	1
B	3006-501-000	Footboard Assembly	1
C	0007-065-000	Truss Head Screw	8
D	3000-300-625	Date of Manufacturing Label	1
F	3000-300-113	8” Cable Tie	10
G	3000-300-641	Footboard Ground Label	1
K	3006-350-200	Litter Assembly	1
L	3006-400-105	HE Siderail Assembly, Left	1
M	3006-400-205	HE Siderail Assembly, Right	1
N	3006-400-300	FE Siderail Assembly, Left	1
P	3006-400-400	FE Siderail Assembly, Right	1
R	3006-300-033	Mattress Retainer	2
T	0025-120-000	Pop Rivet	4
U	3006-300-275	Shield, Right	1
V	3006-300-276	Shield, Left	1
W	0011-002-000	Light, Flat Washer	10
Y	0016-028-000	Fiberlock Hex Nut	10
AA	0059-126-000	Push-Mount Wire Clip	2
AB	3002-031-113	Umbilical Isolation Bracket	1
AC	3006-400-493	Stud Cap	10

Return To Table of Contents

Bed Assembly, Zoom® Option

For Reference Only: 3006-044-102

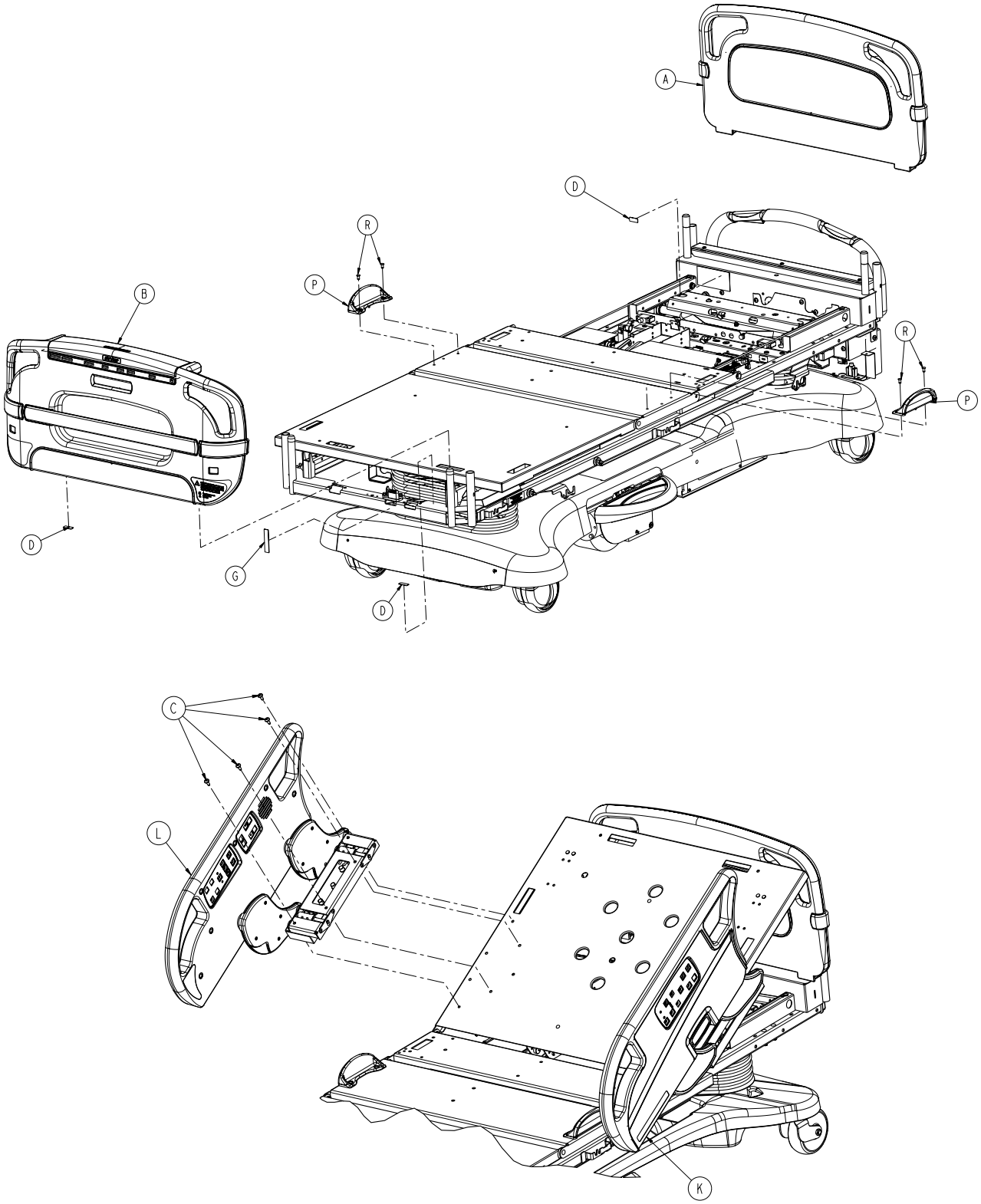

Return To Table of Contents

Bed Assembly, Zoom® Option

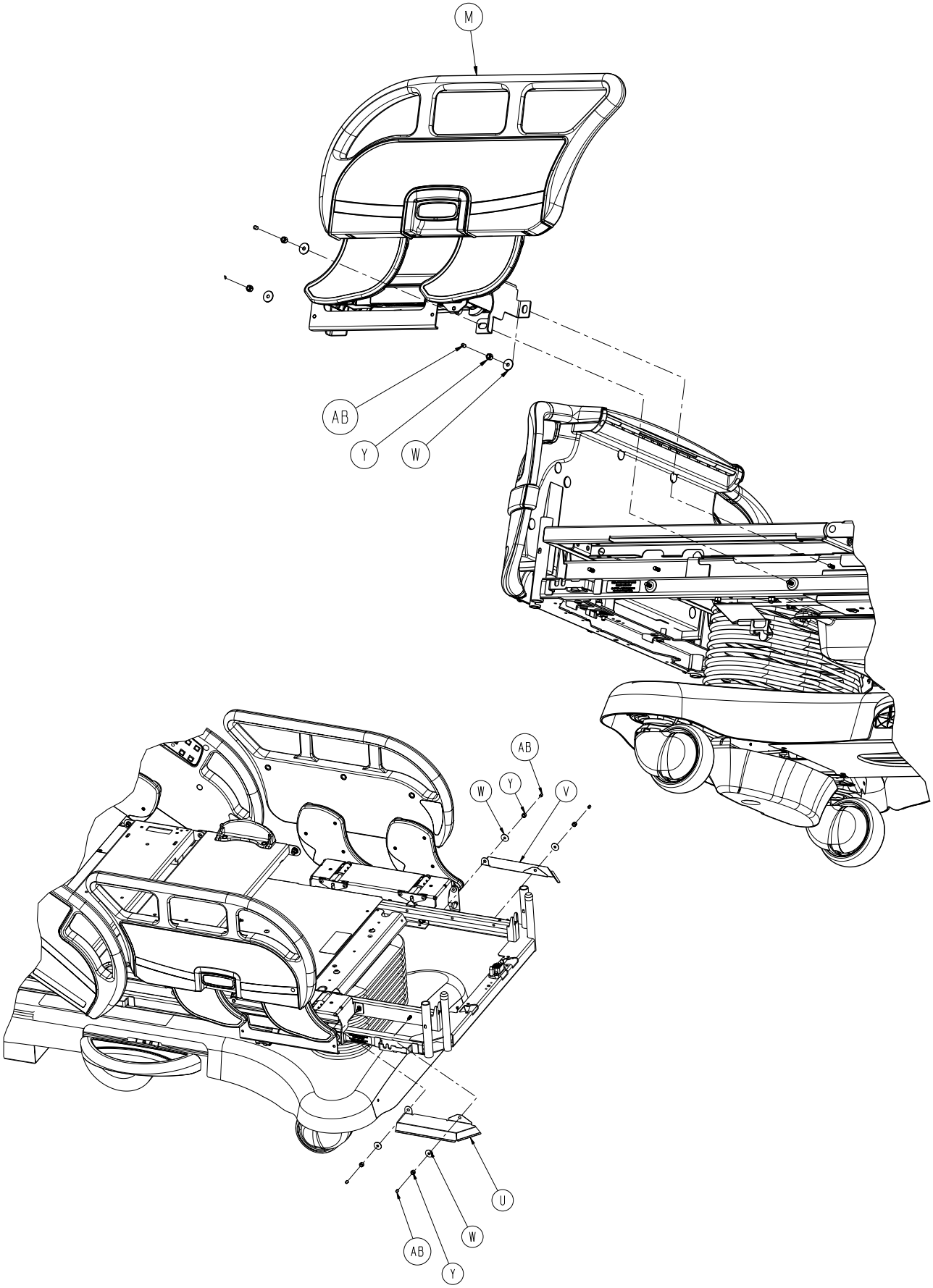

Return To Table of Contents

Bed Assembly, Zoom® Option

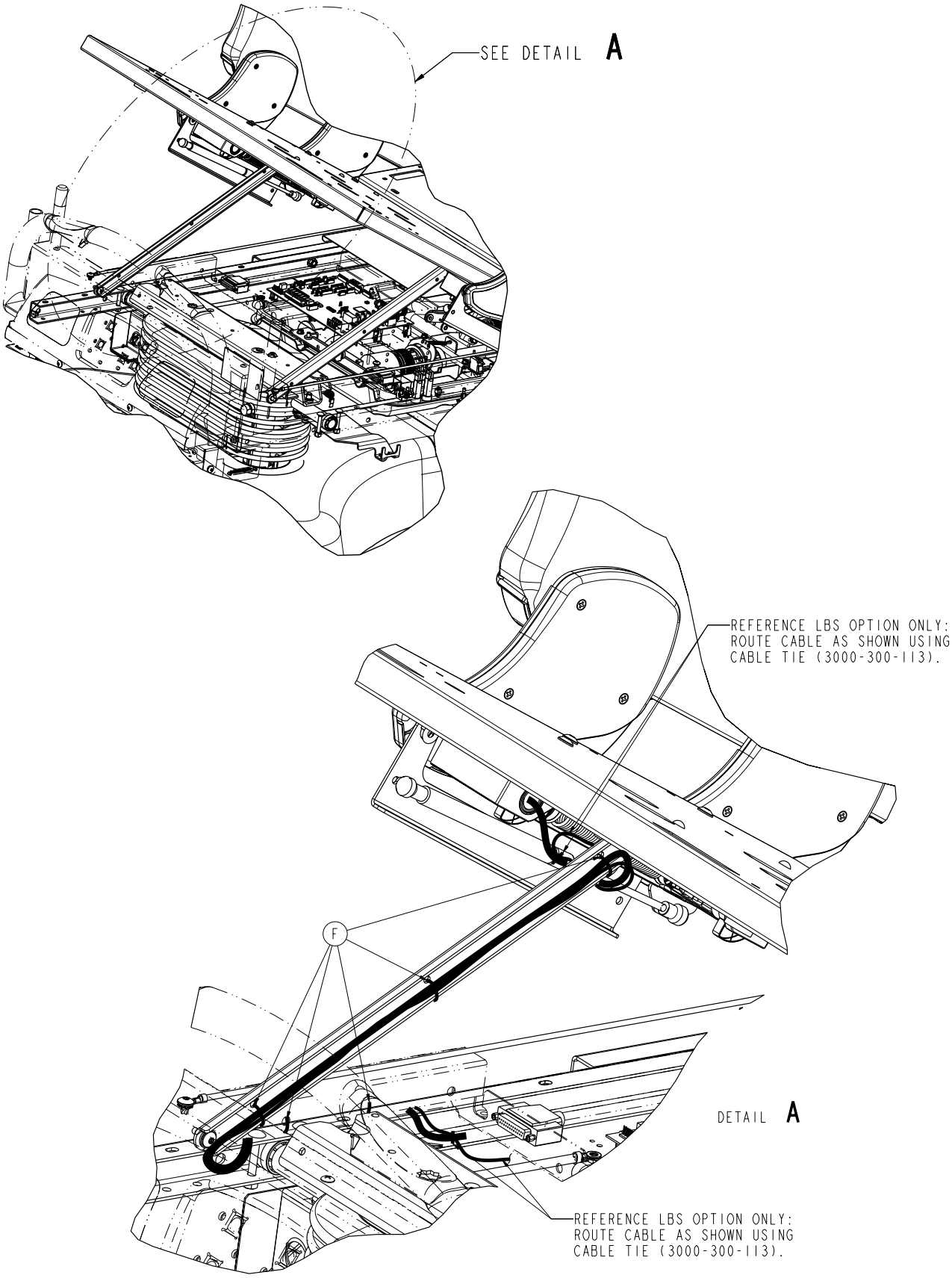

Return To Table of Contents

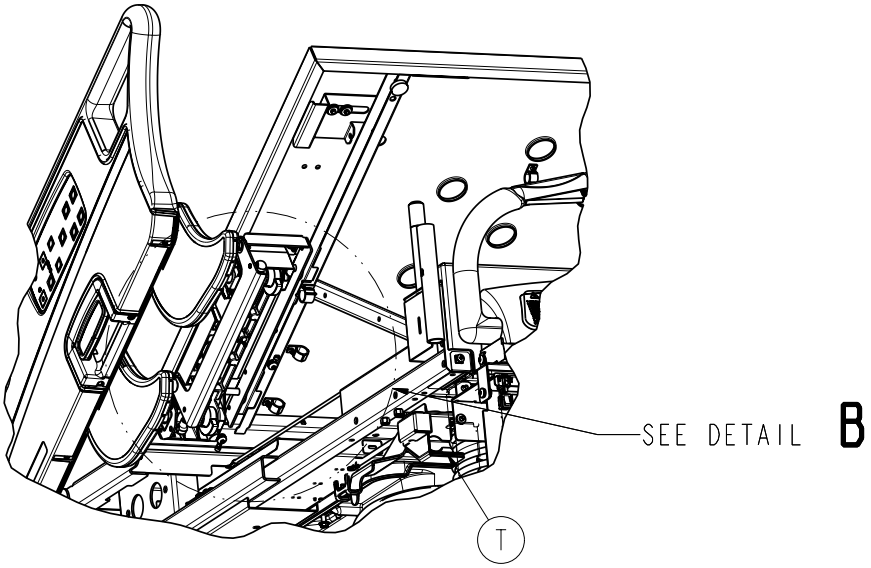

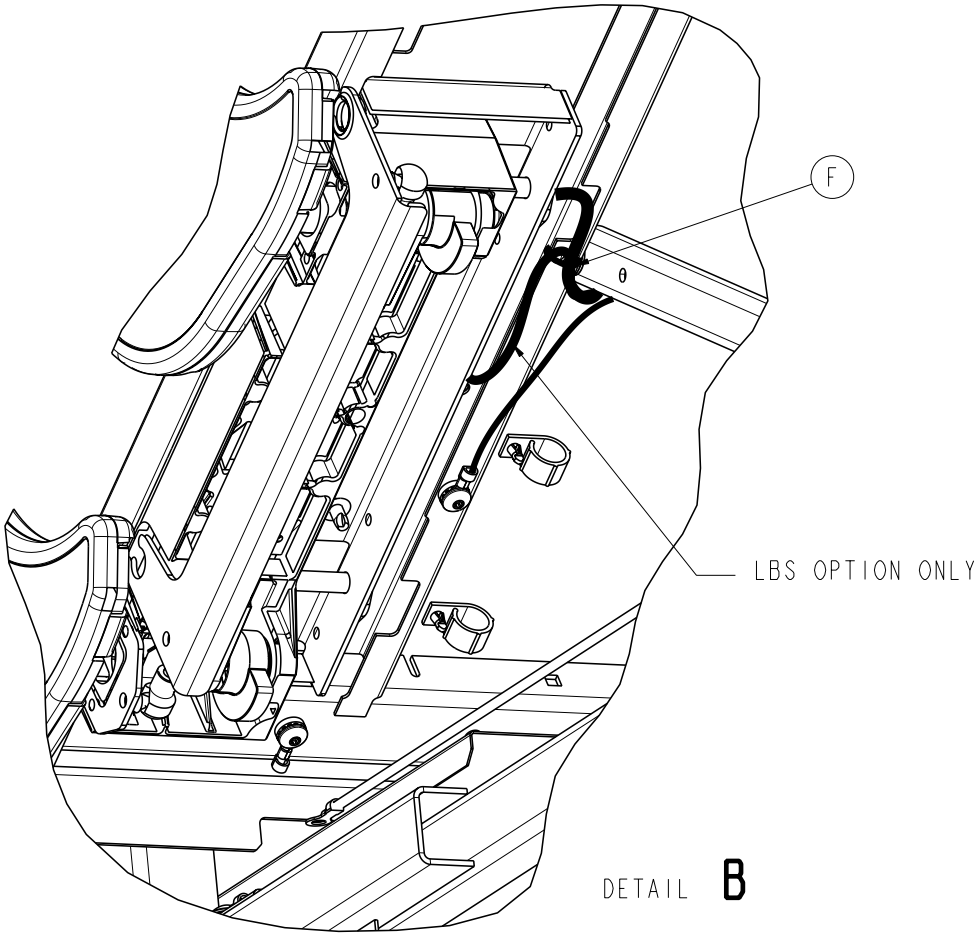

Return To Table of Contents

Bed Assembly, Zoom® Option

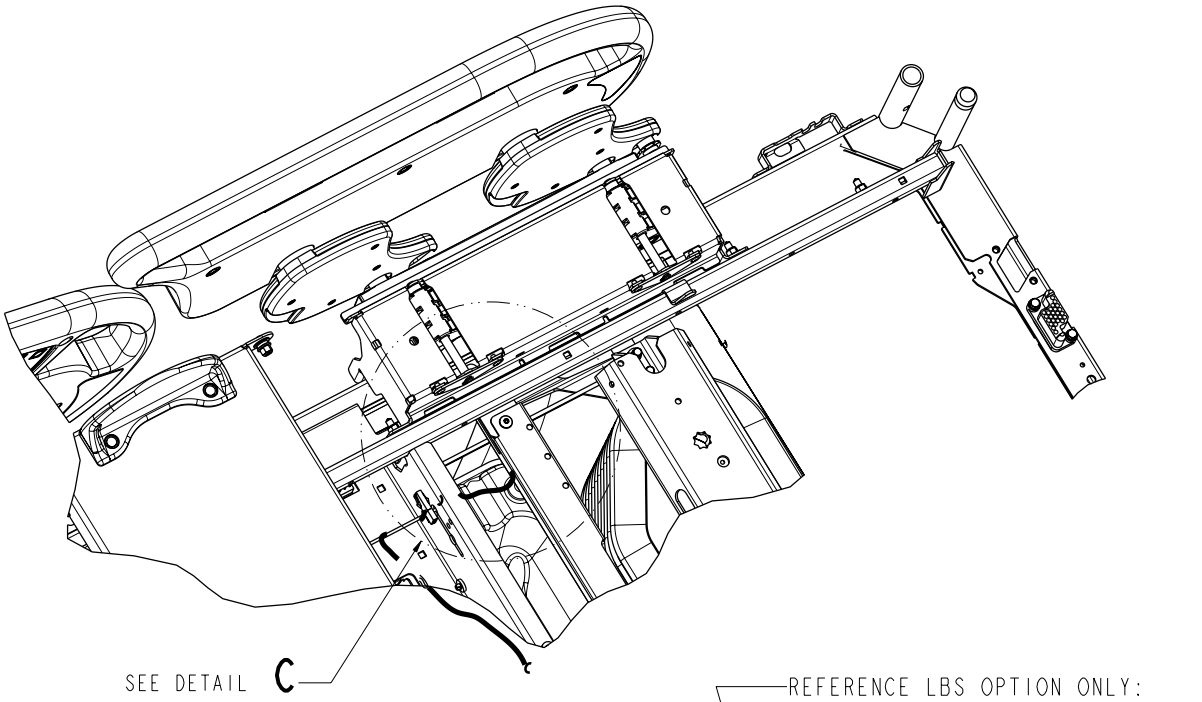

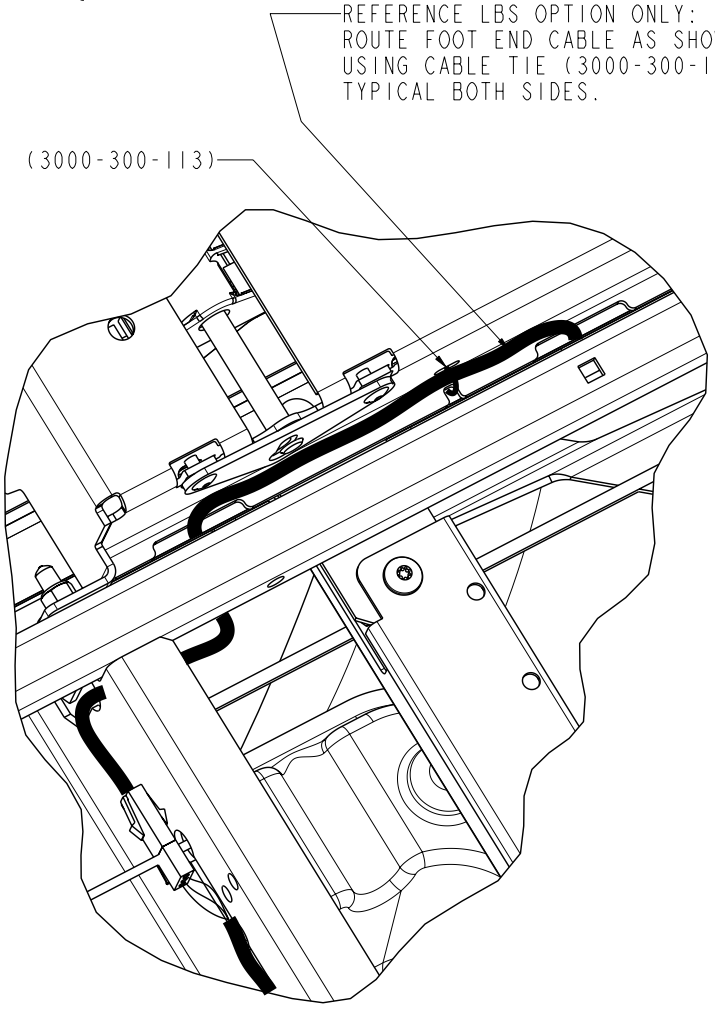

DETAIL C

Return To Table of Contents

Zoom® Option Bed Components - 3006-044-102 - (Reference Only)

item	Part No.	Part Name	Qty.
A	3006-600-010	Headboard Assembly	1
B	3006-501-000	Footboard Assembly	1
C	0007-065-000	Truss Head Screw	8
D	3000-300-625	Dom Label	1
F	3000-300-113	8” Cable Tie	10
G	3000-300-641	Footboard Ground Label	1
J	3006-344-002	Zoom® Bed Litter Assembly	1
K	3006-400-105	Head End Siderail Assembly, LH	1
L	3006-400-205	Head End Siderail Assembly, RH	1
M	3006-400-300	Foot End Siderail Assembly, LH	1
N	3006-400-400	Foot End Siderail Assemby, RH	1
P	3006-300-033	Mattress Retainer	2
R	0025-120-000	Pop Rivet	4
T	3006-032-113	Umbilical Isolation Bracket	1
U	3006-300-275	Shield, Right	1
V	3006-300-276	Shield, Left	1
W	0011-180-000	Light Flat Washer	10
Y	0016-028-000	Fiberlock Hex Nut	10
AA	0059-126-000	Push-Mount Wire Clip	2
AB	3006-400-493	Stud Cap	10

Return To Table of Contents

Bed Assembly, *i*Bed® Awareness Option

(Scale, Bed Exit, Zone Control)

For Reference Only: 3006-500-115

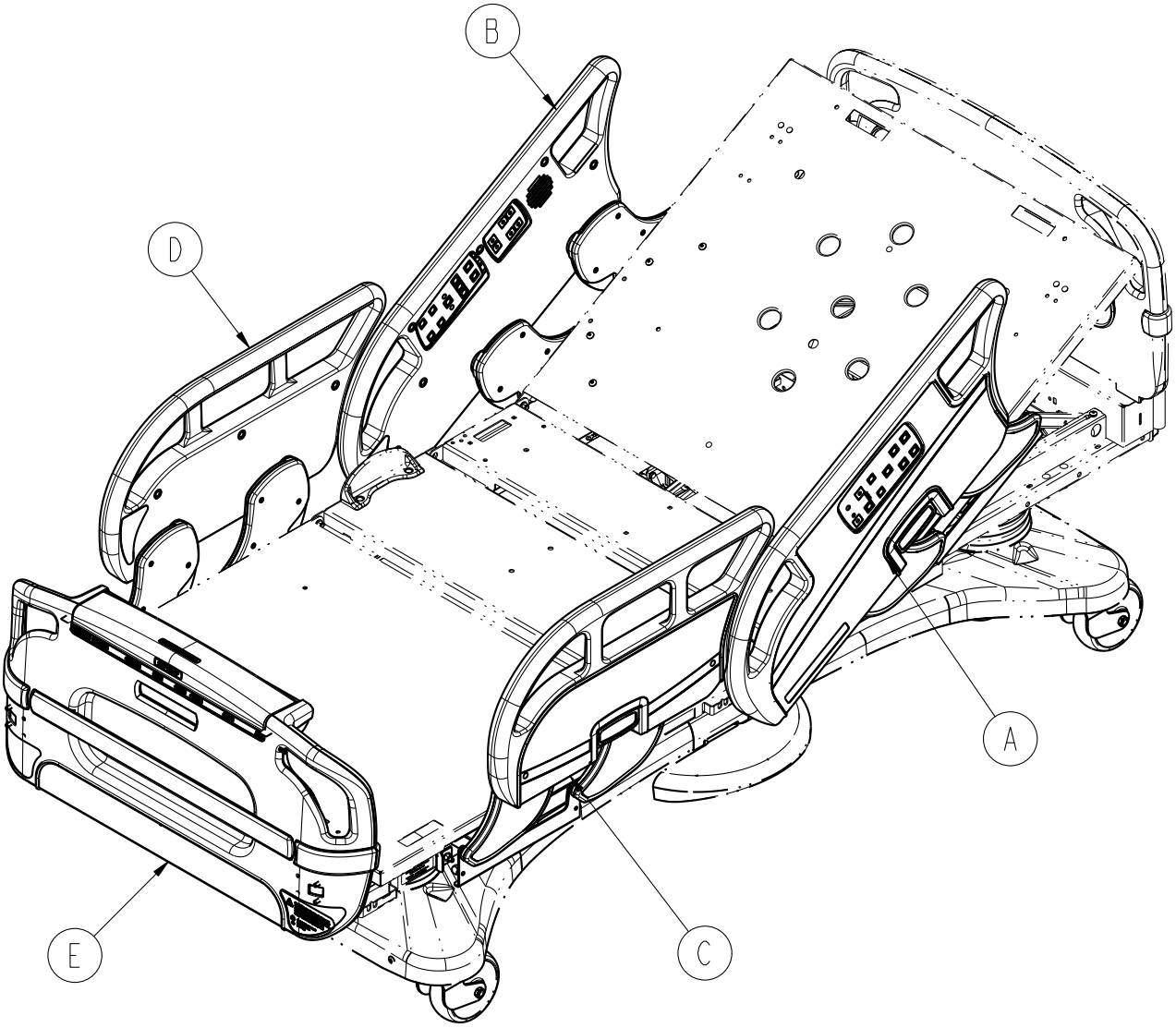

Return To Table of Contents

Bed Assembly, *i*Bed® Awareness Option

(Scale, Bed Exit, Zone Control)

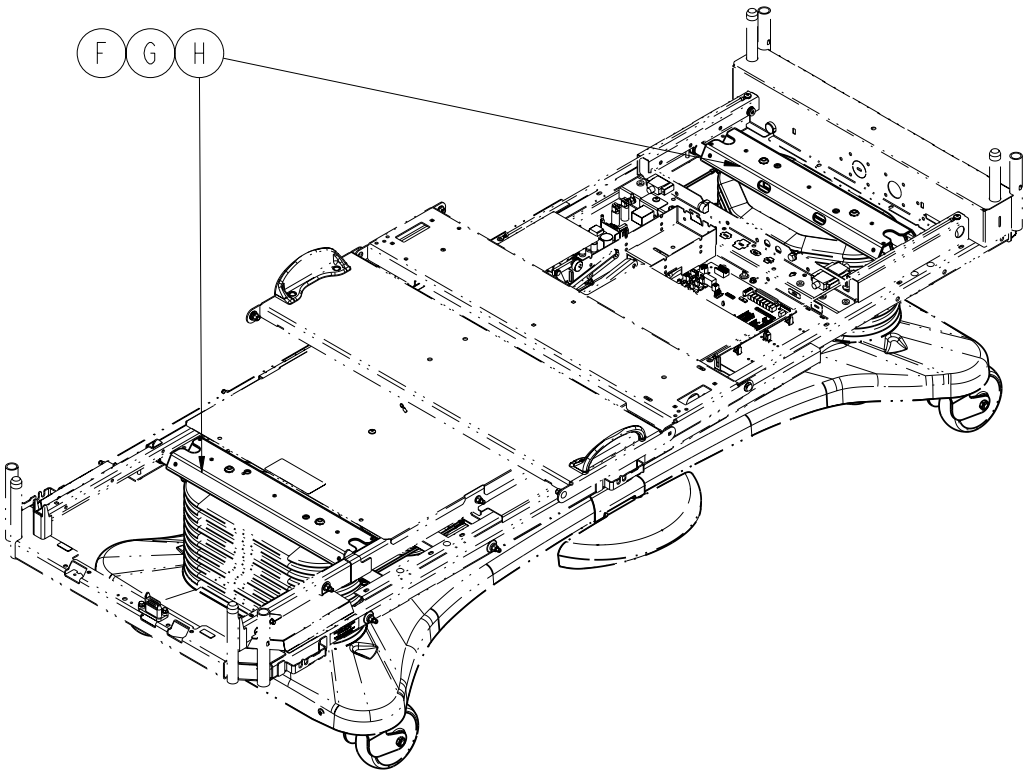

***i*Bed® Awareness Option Components - 3006-500-115 - (Reference Only)**

item	Part No.	Part Name	Qty.
A	3006-400-100	Head End Siderail Assembly, LH	1
B	3006-400-200	Head End Siderail Assembly, RH	1
C	3006-400-305	Foot End Siderail Assembly, LH	1
D	3006-400-405	Foot End Siderail Assembly, RH	1
E	3006-500-100	Footboard Assembly	1
F	3002-317-003	Scale/Bed Exit Option Assembly	1
G	3006-326-501	Load Cell Bed Lift Header Assembly	1
H	3006-307-501	Load Cell Bed Lift Header Assembly	1

Return To Table of Contents

Bed Assembly, *i*Bed® Wireless Option, Blue

For Reference Only: 5212-030-001

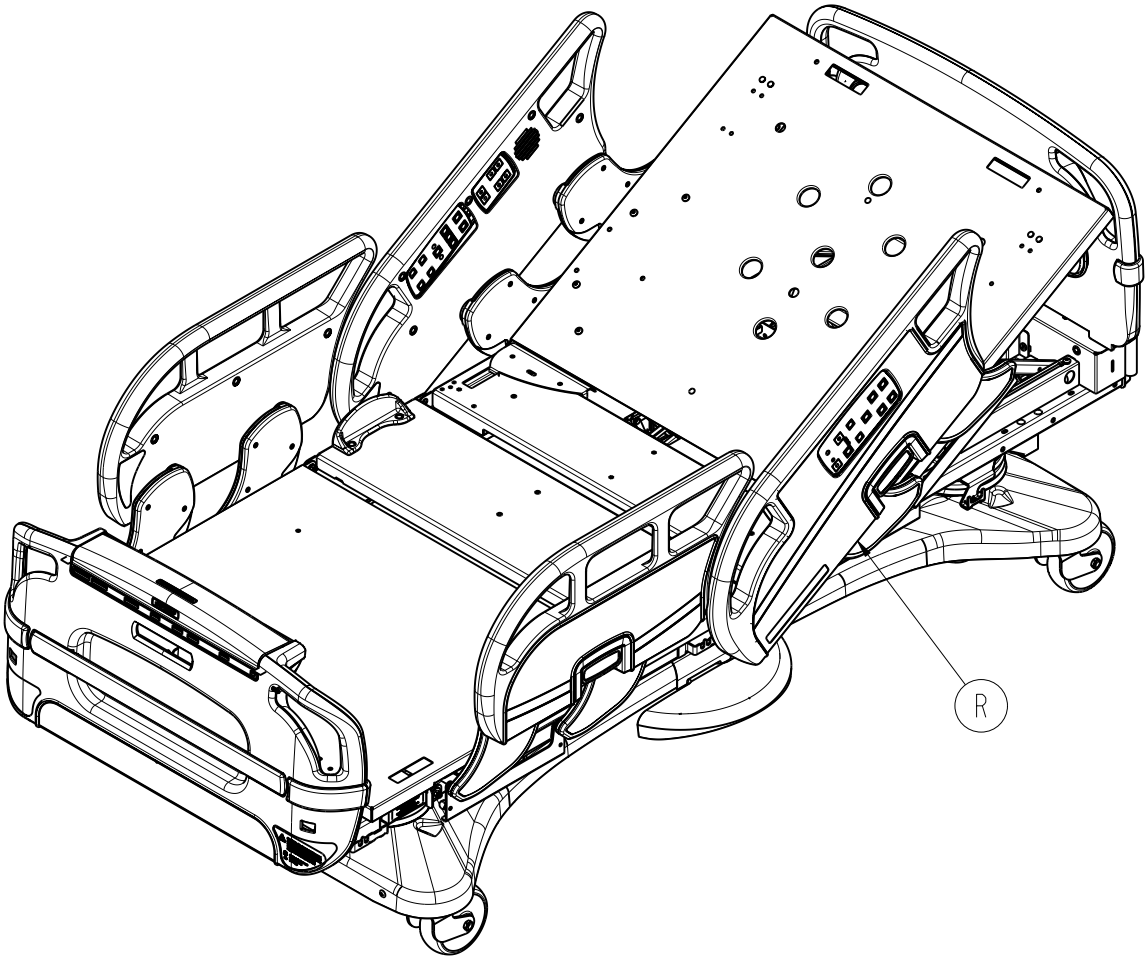

Return To Table of Contents

Bed Assembly, *i*Bed® Wireless Option, Blue

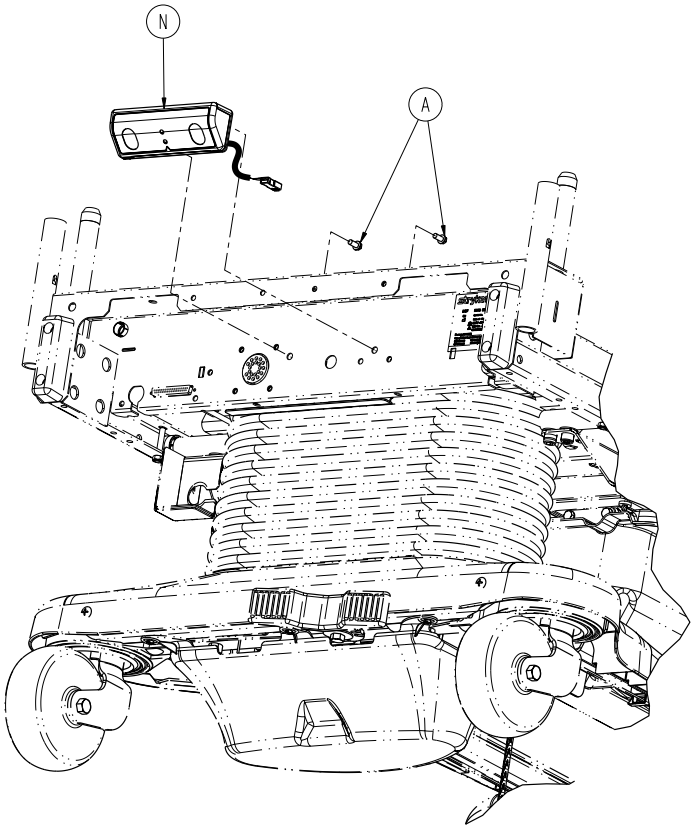

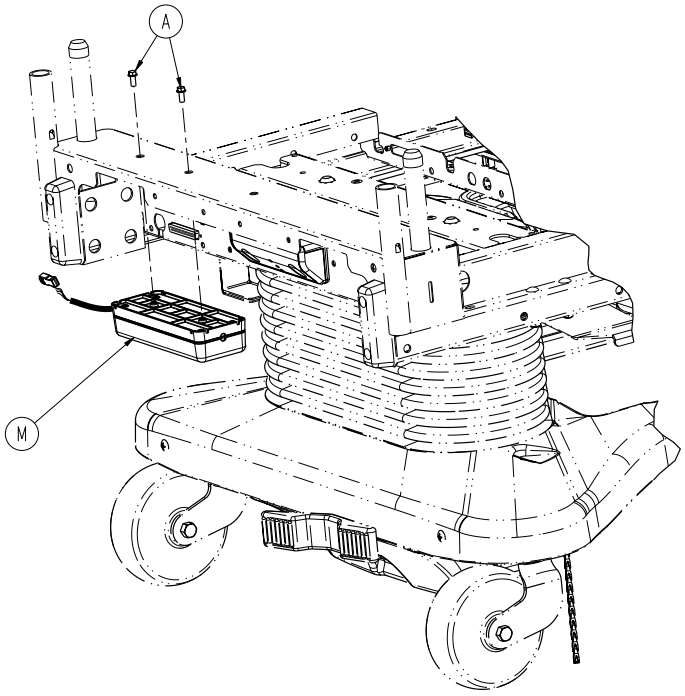

Return To Table of Contents

Bed Assembly, *i*Bed® Wireless Option, Blue

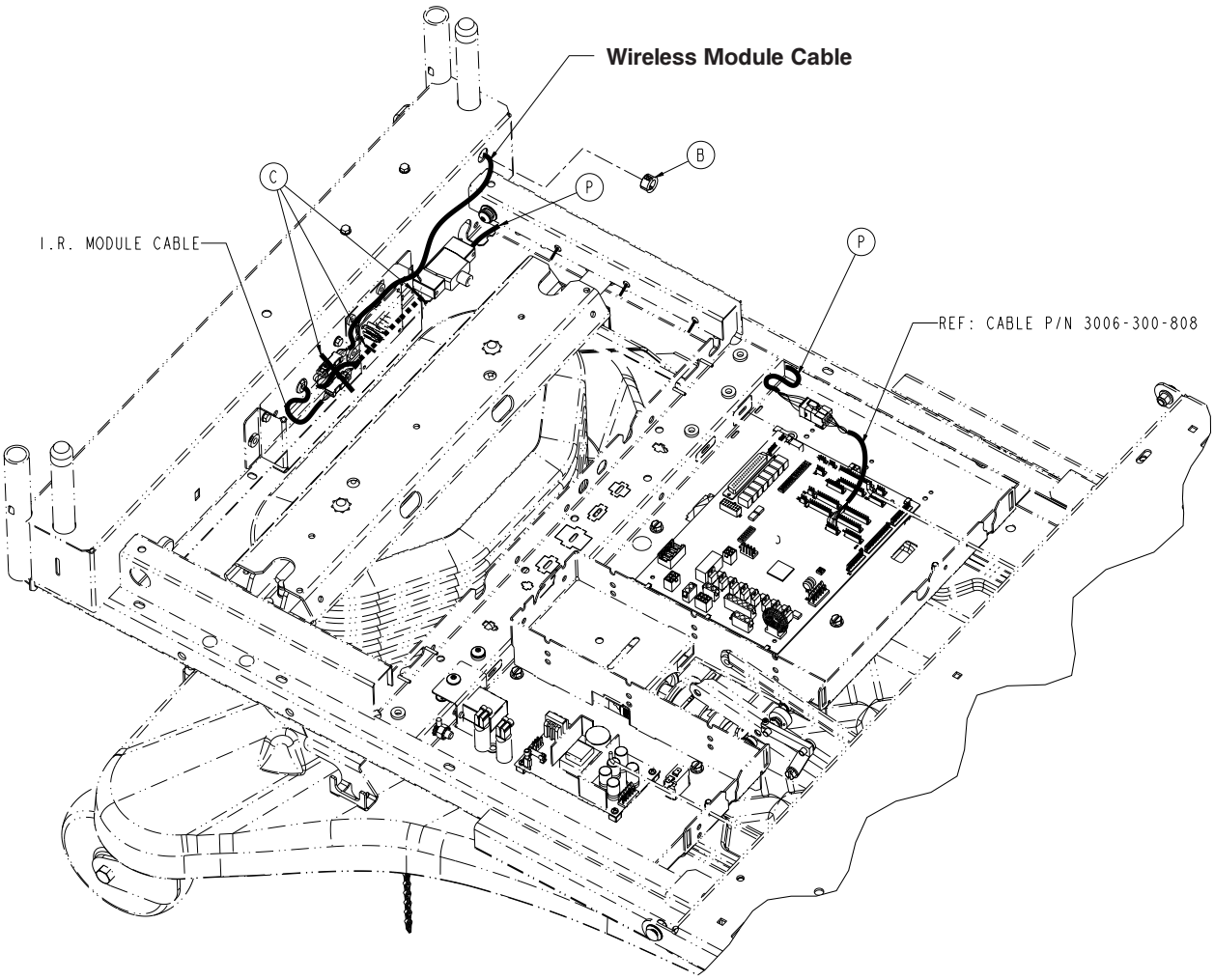

Bed Assembly, *i*Bed® Wireless Option, Blue - 5212-030-001 - (Reference Only)

item	Part No.	Part Name	Qty.
A	0023-126-000	Hex Washer Head Hi-Lo Fastener	4
B	0030-070-000	Cable Management Bushing	1
C	3000-300-113	8” Cable Tie	3
M	5212-300-012	Wireless Module Assembly	1
N	5212-300-053	I.R. Module Assembly	1
P	5212-300-854	Cable, Non-Zoom Wireless	1
R	3006-043-102	Standard Length Bed Assembly	1

Return To Table of Contents

Bed Assembly, Battery Backup, *i*Bed® Wireless Option

For Reference Only: 5212-350-000

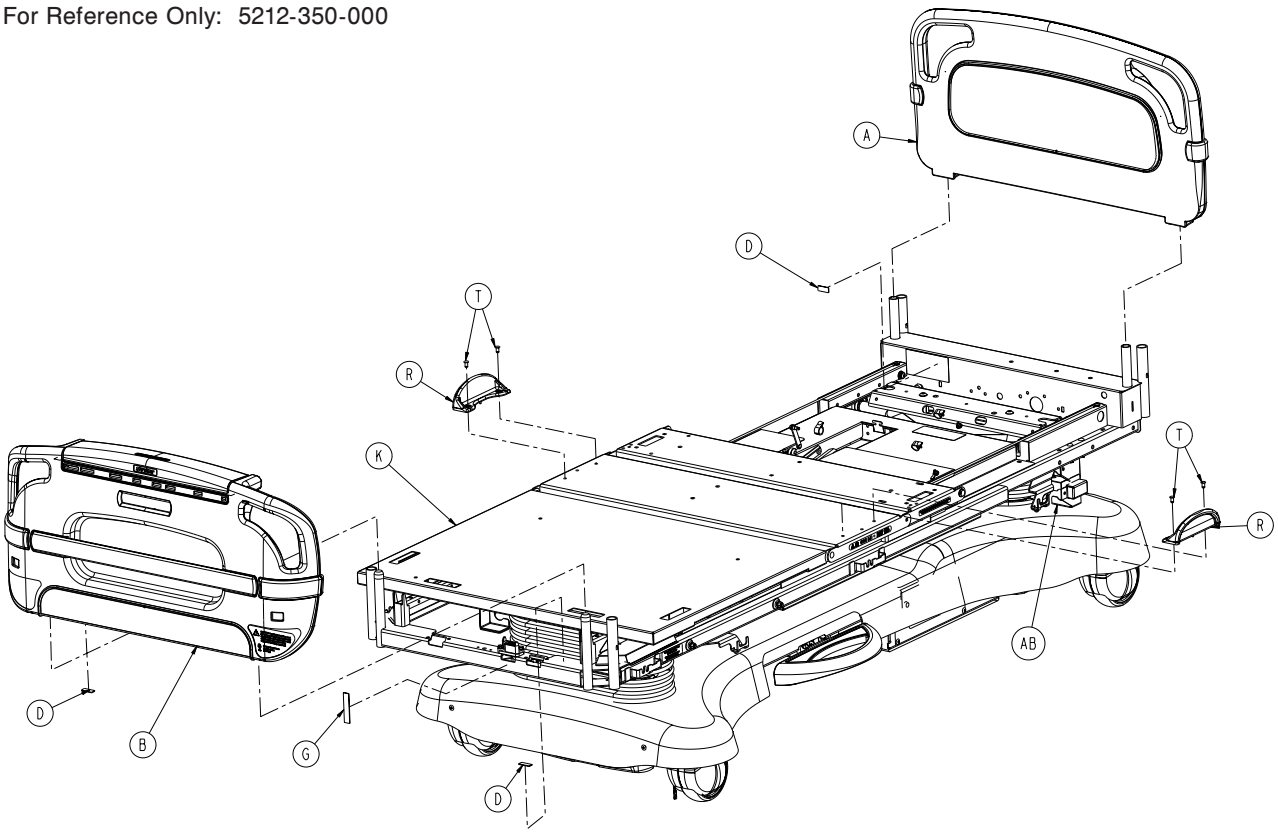

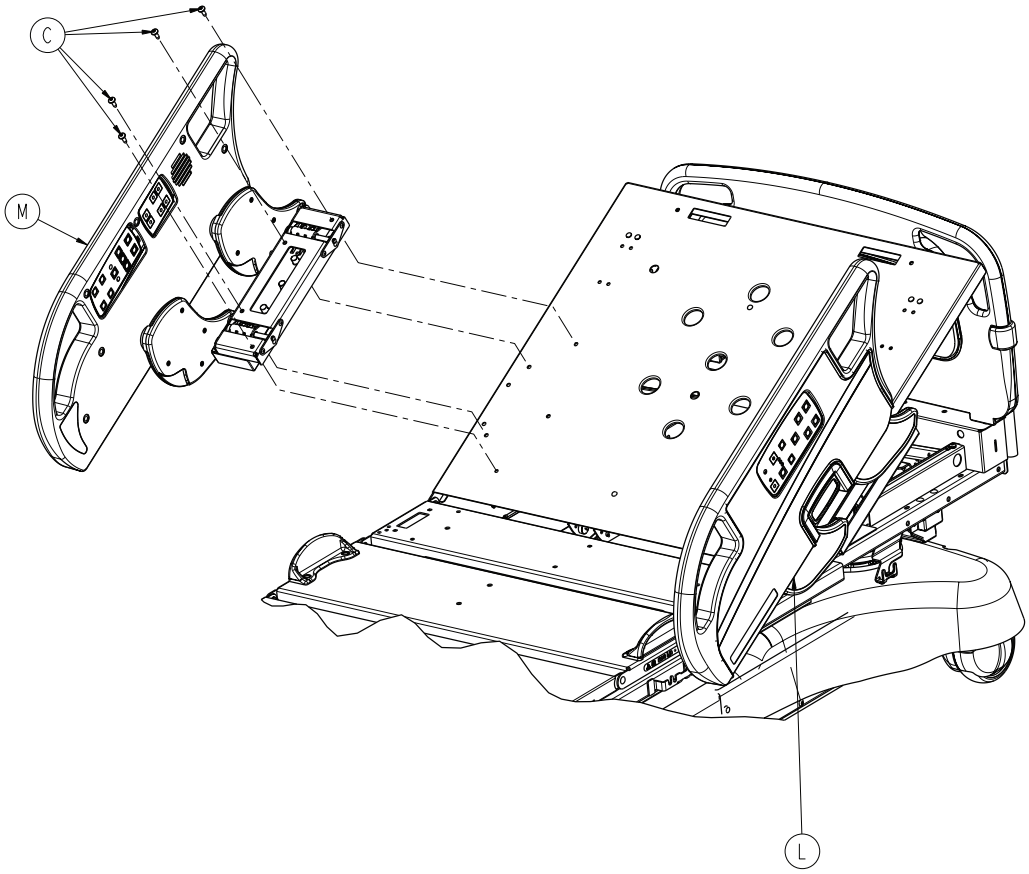

Return To Table of Contents

Bed Assembly, Battery Backup, *i*Bed® Wireless Option

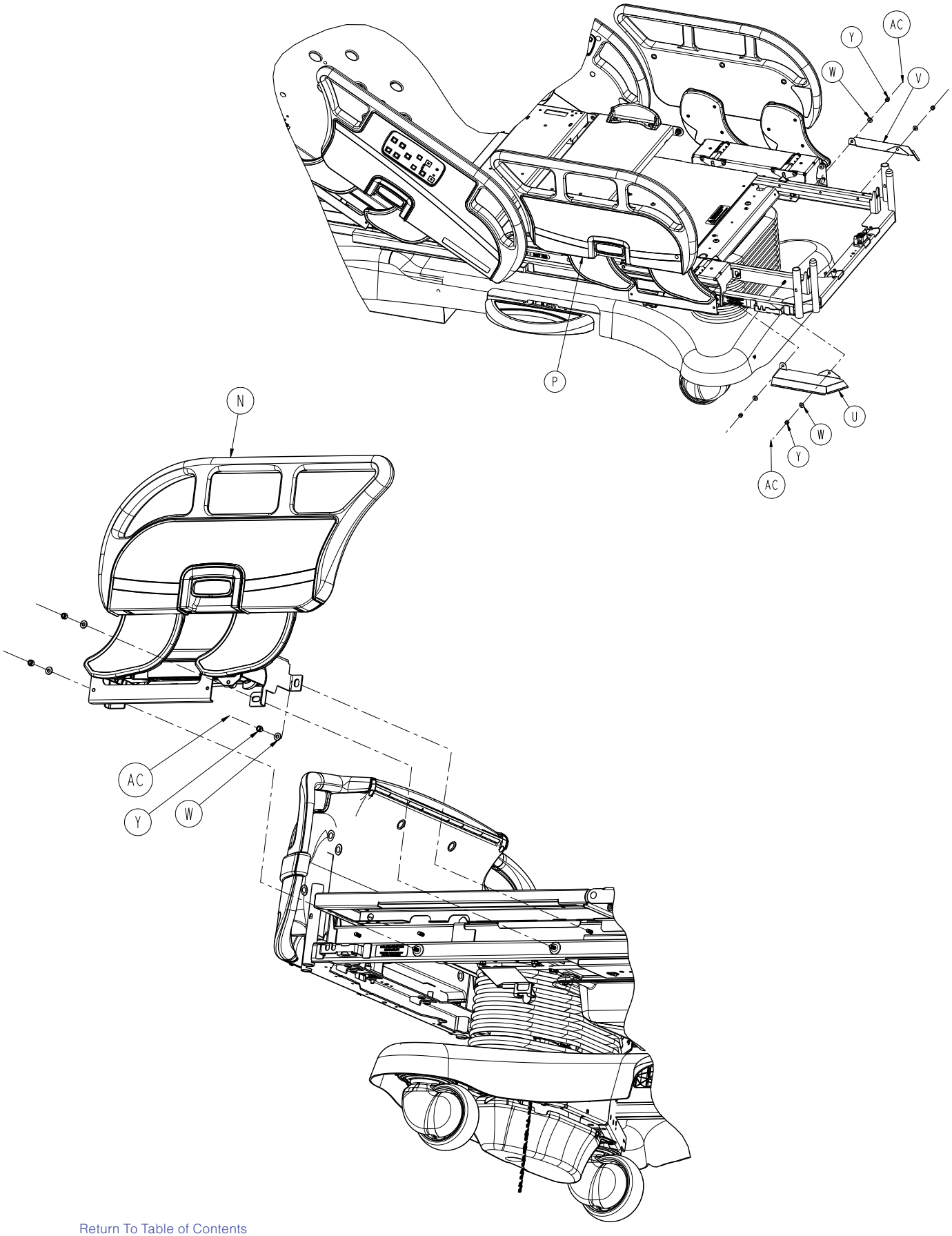

Return To Table of Contents

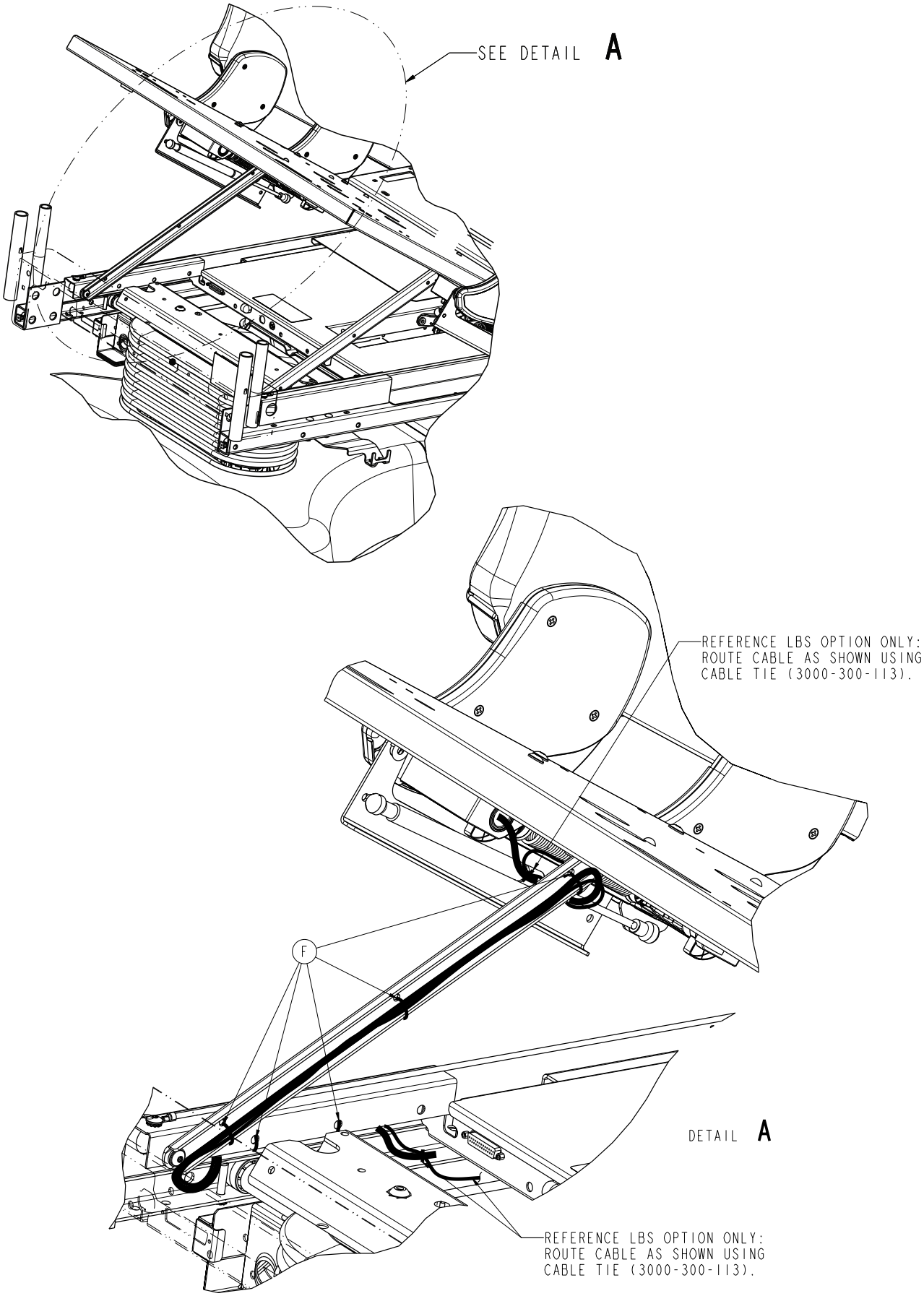

Return To Table of Contents

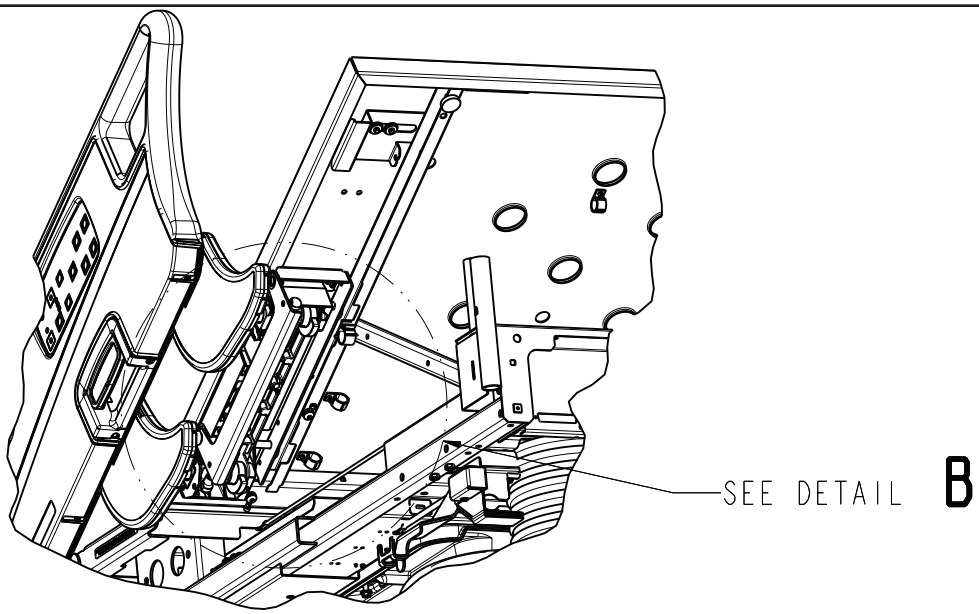

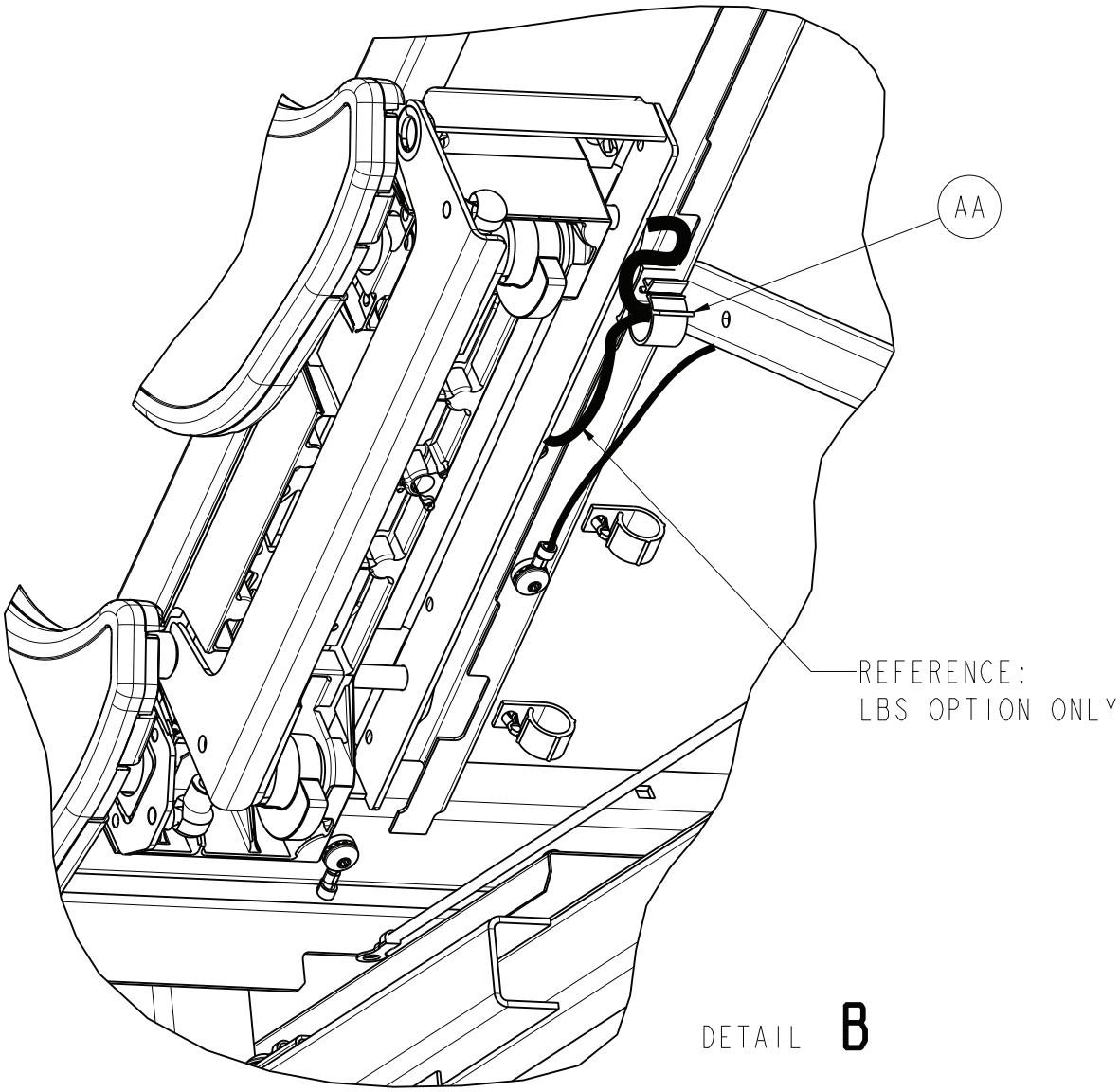

Return To Table of Contents

Bed Assembly, Battery Backup, *i*Bed® Wireless Option

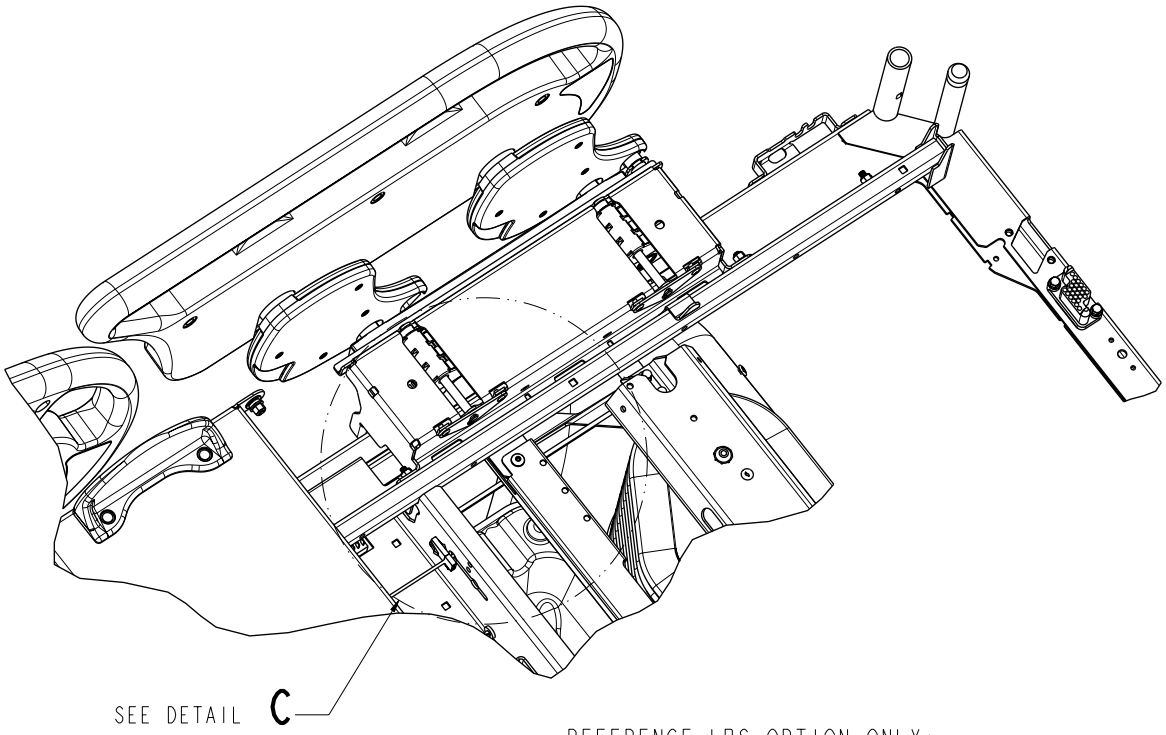

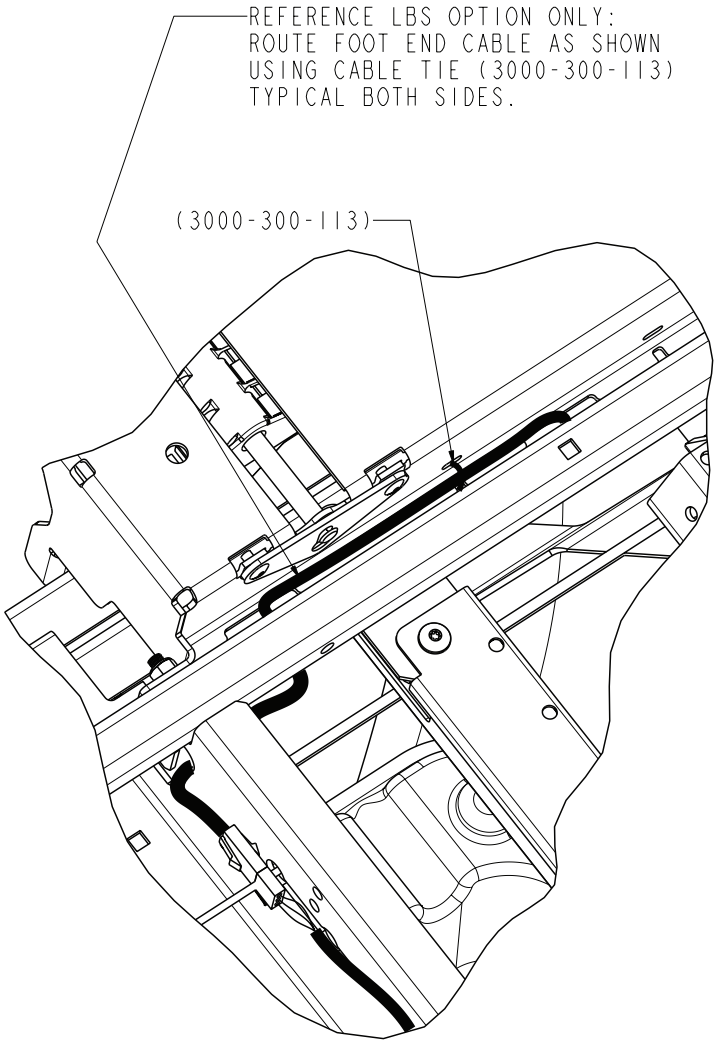

DETAIL C

Return To Table of Contents

Bed Assembly, Battery Backup, *i*Bed® Wireless Option - 5212-350-000 - (Reference Only)

item	Part No.	Part Name	Qty.
A	3006-600-010	Headboard Assembly	1
B	3006-501-000	Footboard Assembly	1
C	0007-065-000	Truss Head Screw	8
D	3000-300-625	Label, Date of Manufacturing	1
F	3000-300-113	8” Cable Tie	10
G	3000-300-641	Label, Footboard Ground	1
K	5212-350-200	Litter Assembly, Batter Backup, *i*Bed	1
L	3006-400-105	Head End Siderail Assembly, LH	1
M	3006-400-205	Head End Siderail Assembly, RH	1
N	3006-400-300	Foot End Siderail Assembly, LH	1
P	3006-400-400	Foot End Siderail Assembly, RH	1
R	3006-300-033	Mattress Retainer	2
T	0025-120-000	Pop Rivet	4
U	3006-300-275	Shield, Right	1
V	3006-300-276	Shield, Left	1
W	0011-180-000	Flat Washer	10
Y	0016-028-000	Fiberlock Hex Nut	10
AA	0059-126-000	Push-Mount Wire Clip	2
AB	3006-031-113	Umbilical Isolation Bracket	1
AC	3006-400-493	Stud Cap	10

Return To Table of Contents

Bed Assembly, Zoom®, *i*Bed® Wireless Option

For Reference Only: 5212-044-102

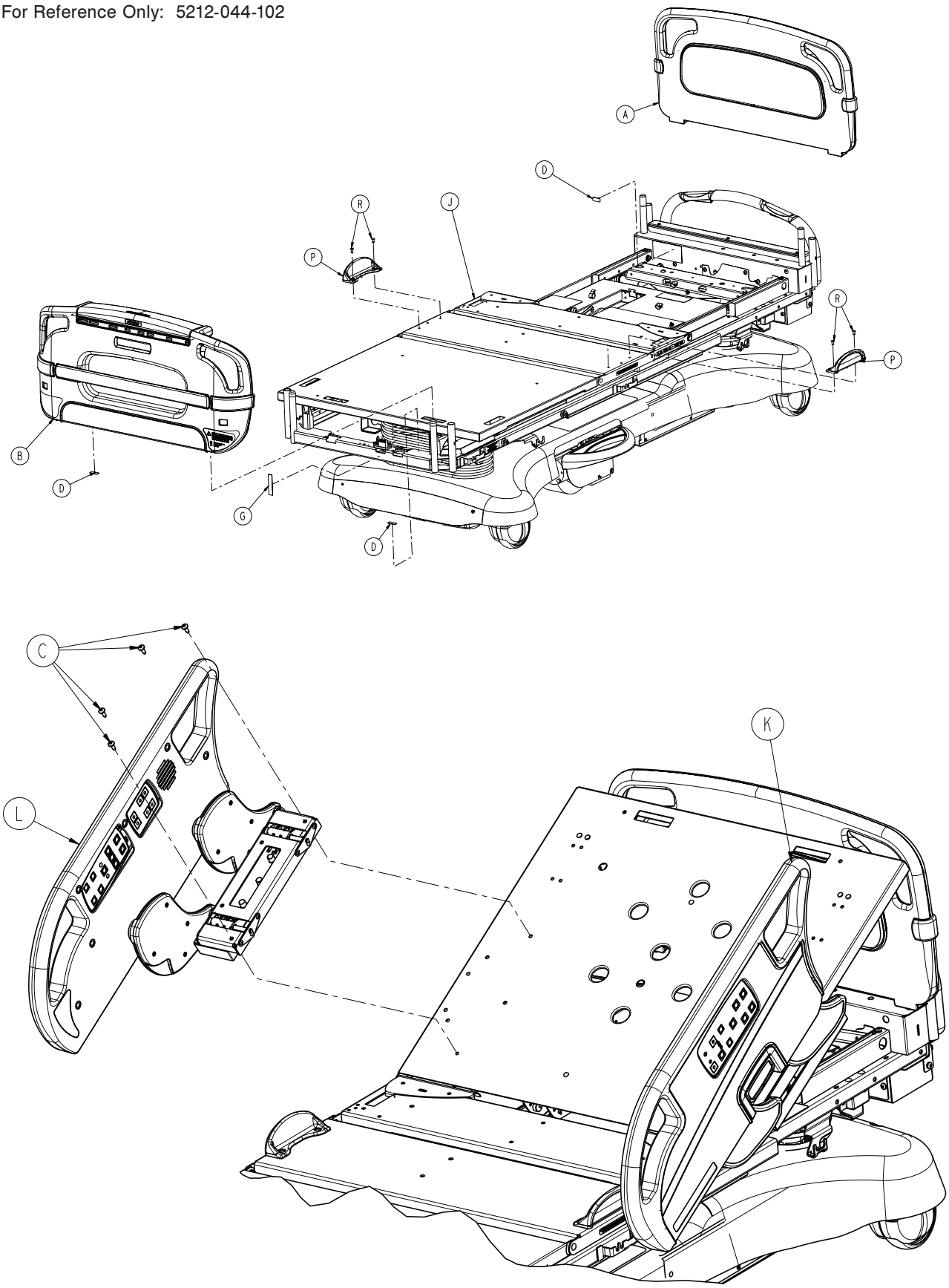

Return To Table of Contents

Bed Assembly, Zoom®, *i*Bed® Wireless Option

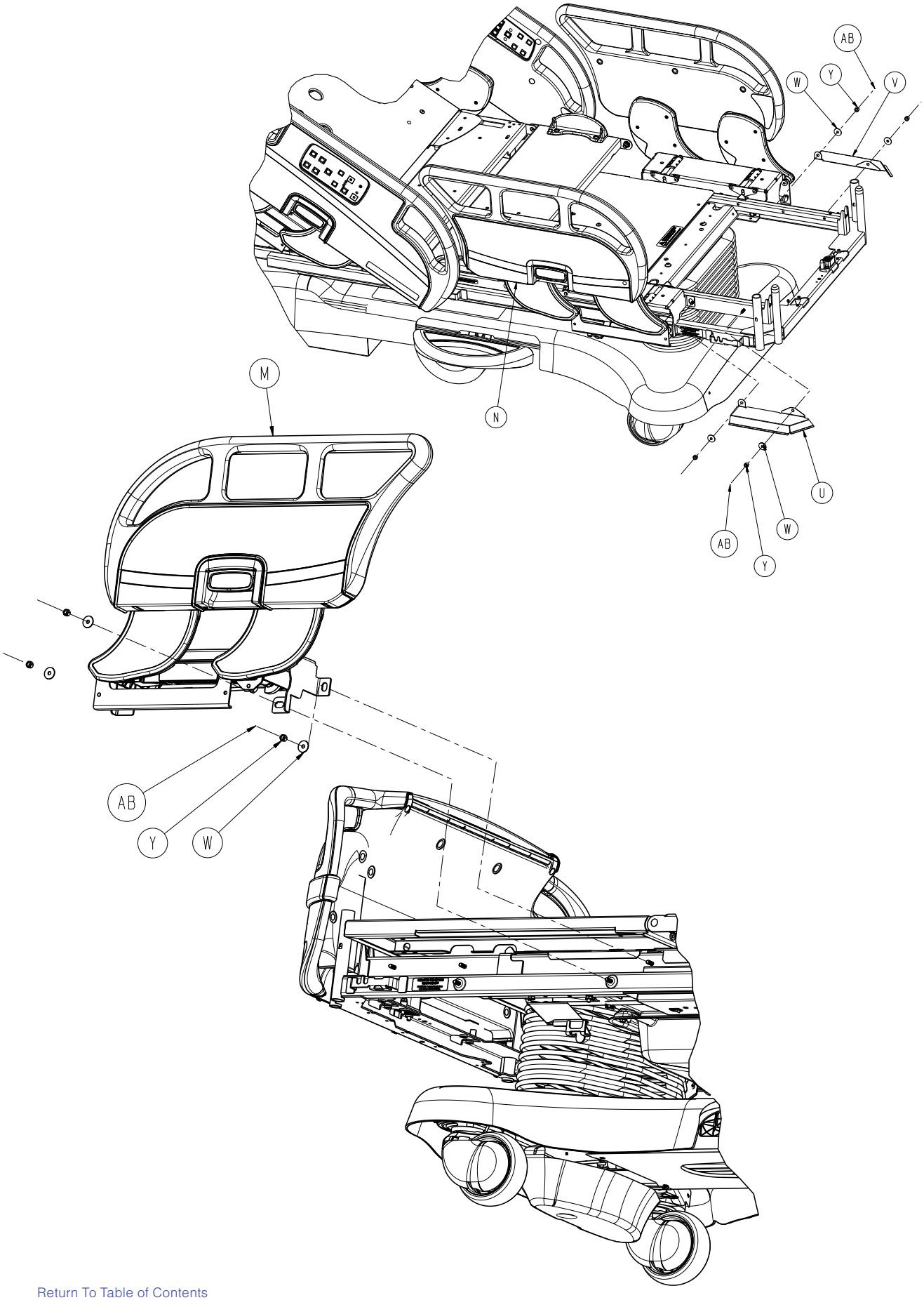

Return To Table of Contents

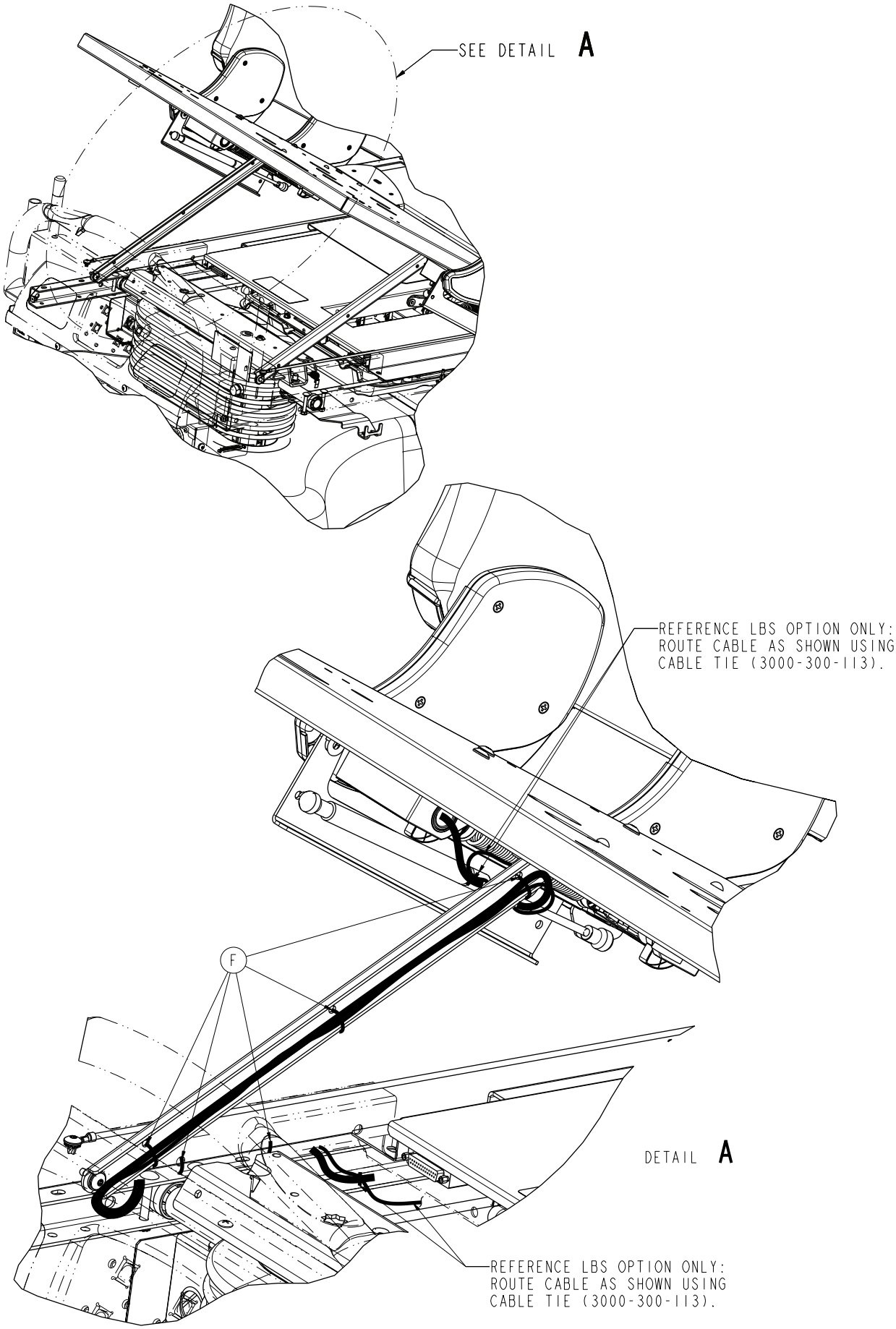

Return To Table of Contents

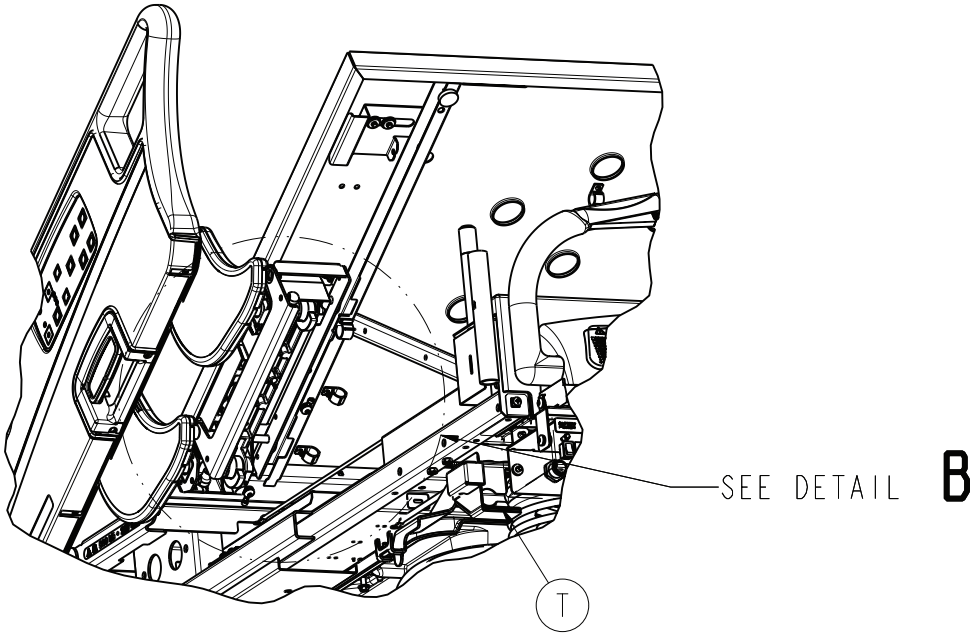

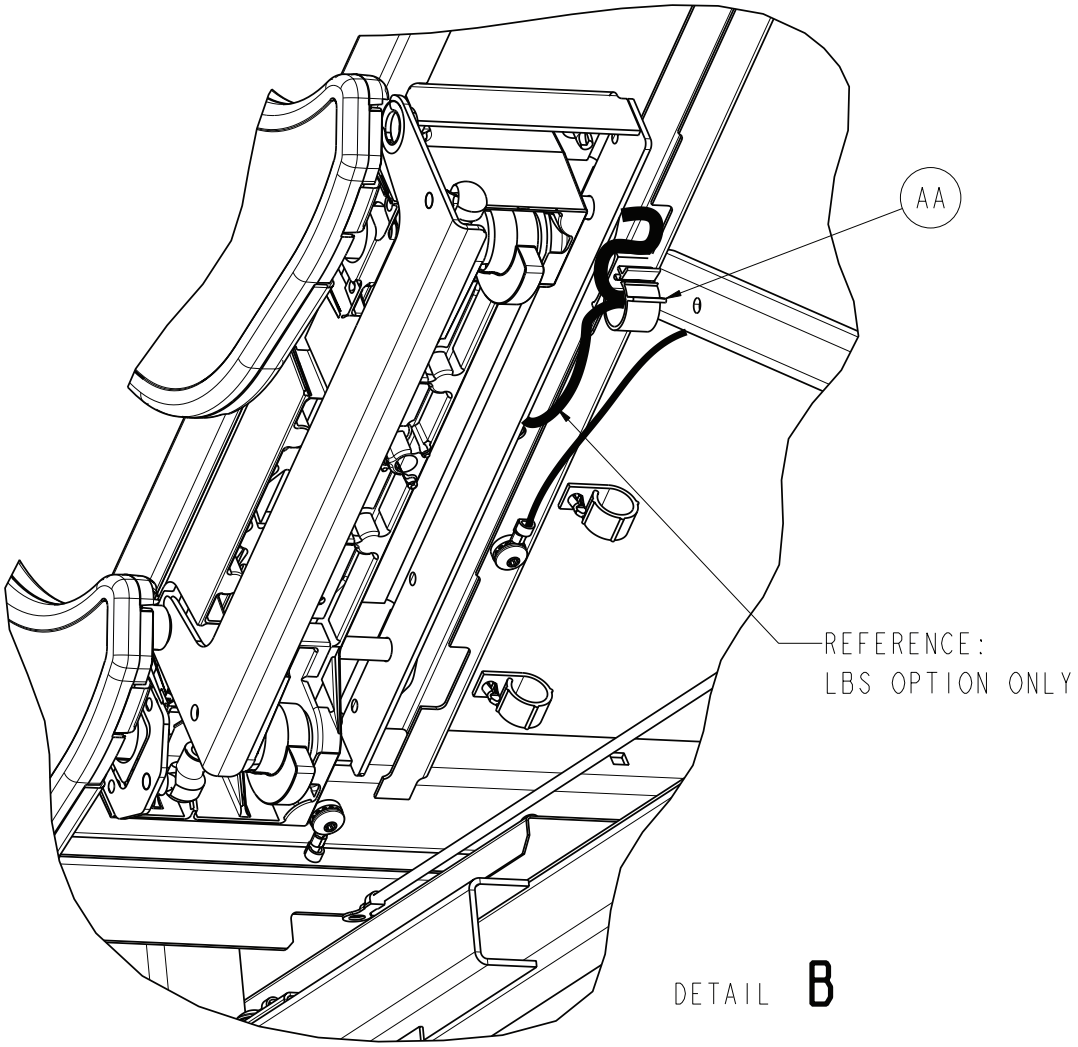

Return To Table of Contents

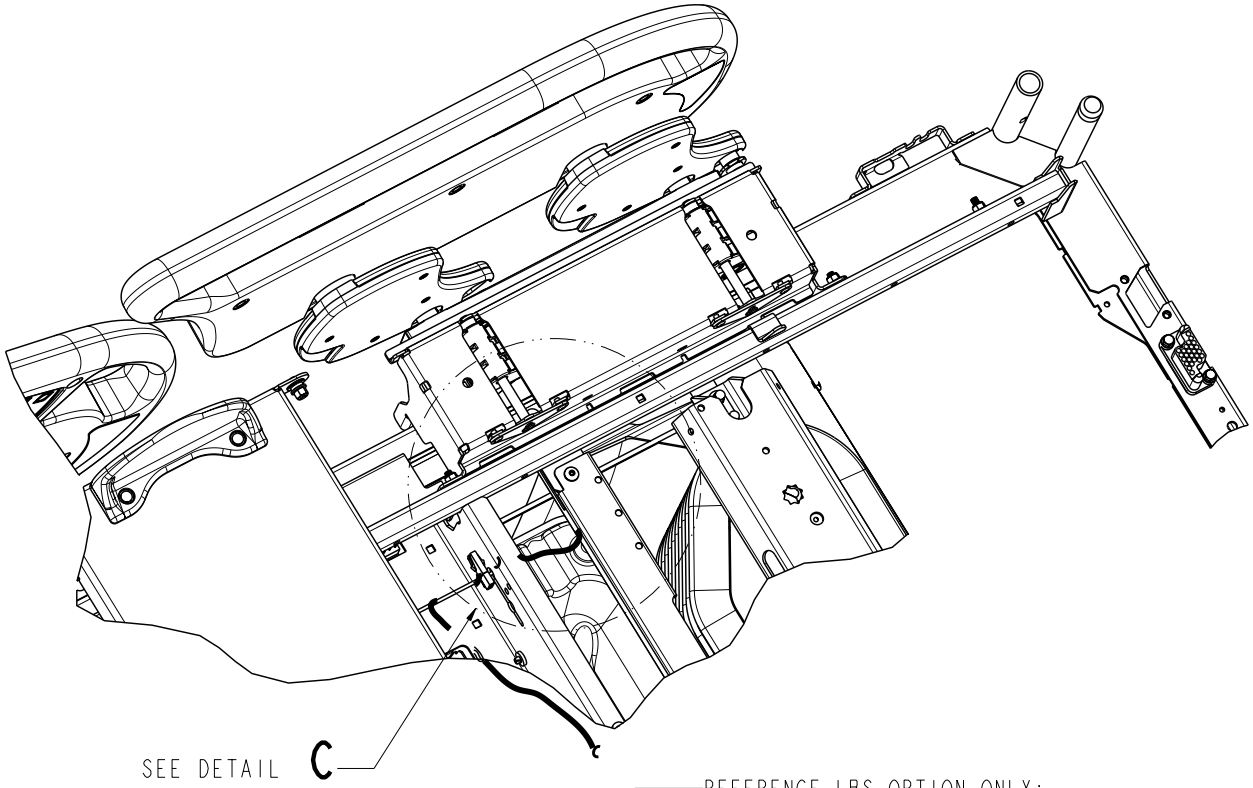

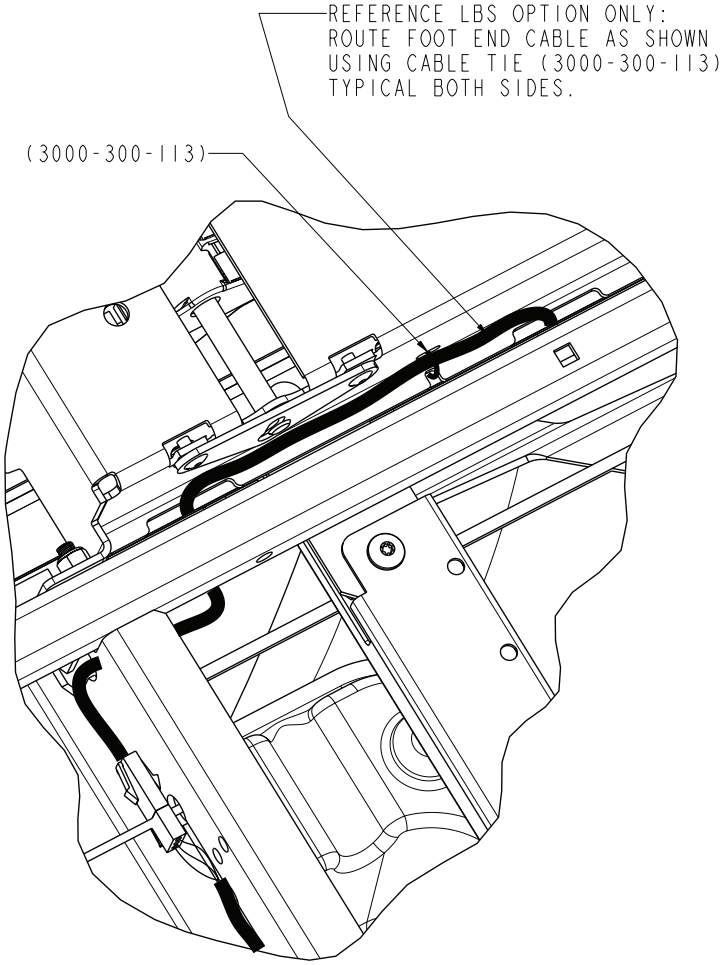

DETAIL C

Return To Table of Contents

Bed Assembly, Zoom®, *i*Bed® Wireless Option - 5212-044-102 - (Reference Only)

item	Part No.	Part Name	Qty.
A	3006-600-010	Headboard Assembly	1
B	3006-501-000	Footboard Assembly	1
C	0007-065-000	Truss Head Screw	8
D	3000-300-625	Date of Manufacturing Label	1
F	3000-300-113	8” Cable Tie	10
G	3000-300-641	Footboard Ground Label	1
J	5212-344-002	Litter Assy, Zoom®, *i*Bed® Wireless	1
K	3006-400-200	Litter Assembly	1
L	3006-400-105	Head End Siderail Assembly, LH	1
M	3006-400-205	Head End Siderail Assembly, RH	1
N	3006-400-300	Foot End Siderail Assembly, LH	1
P	3006-400-400	Foot End Siderail Assembly, RH	1
R	3006-300-033	Mattress Retainer	2
T	0025-120-000	Pop Rivet	4
U	3006-300-275	Shield, Right	1
V	3006-300-276	Shield, Left	1
W	0011-180-000	Flat Washer	10
Y	0016-028-000	Fiberlock Hex Nut	10
AA	0059-126-000	Push-Mount Wire Clip	2
AB	3006-031-113	Umbilical Isolation Bracket	1
AC	3006-400-493	Stud Cap	10

Return To Table of Contents

Base Assembly, Common Components

For Reference Only: 3006-200-002

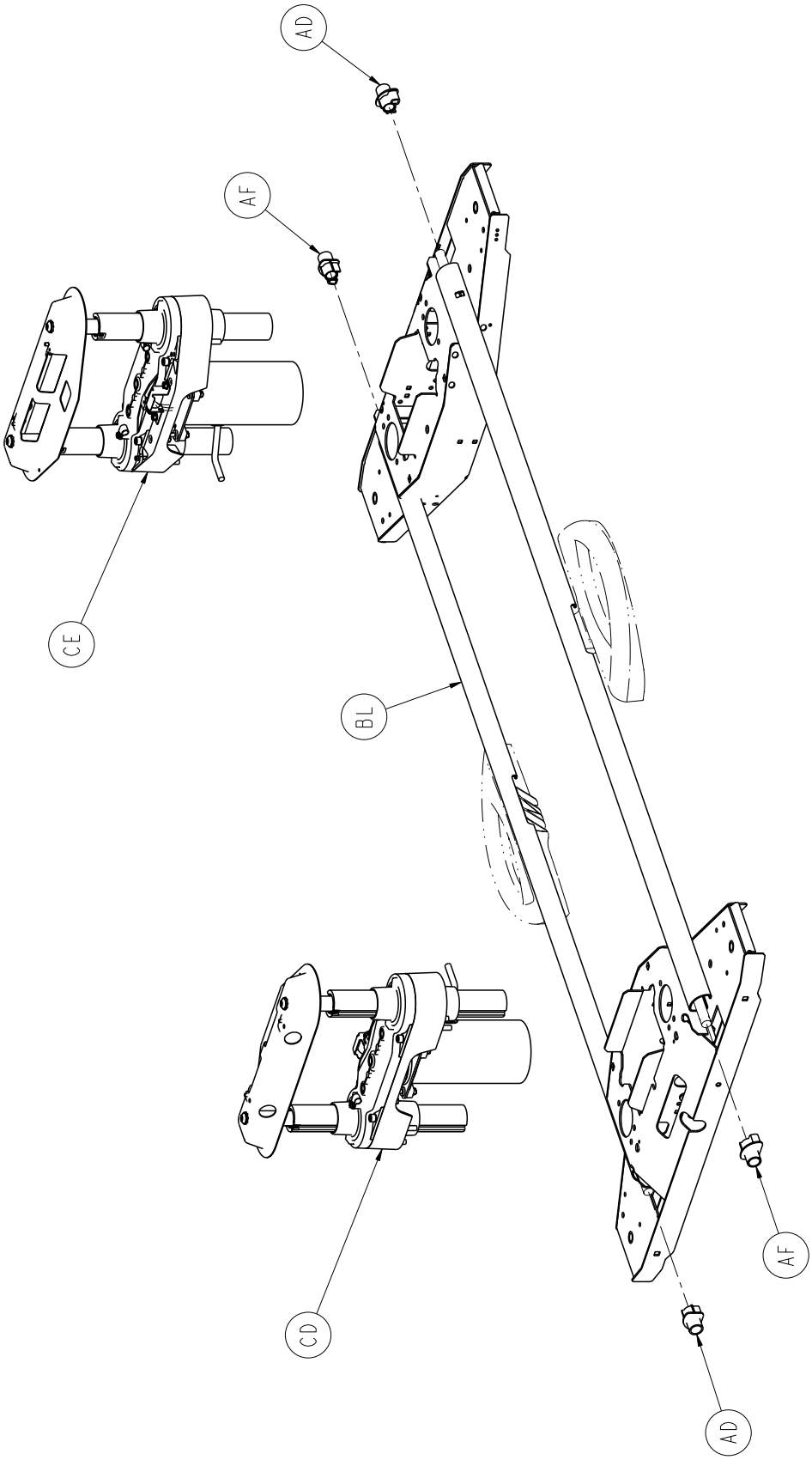

Return To Table of Contents

Base Assembly, Common Components

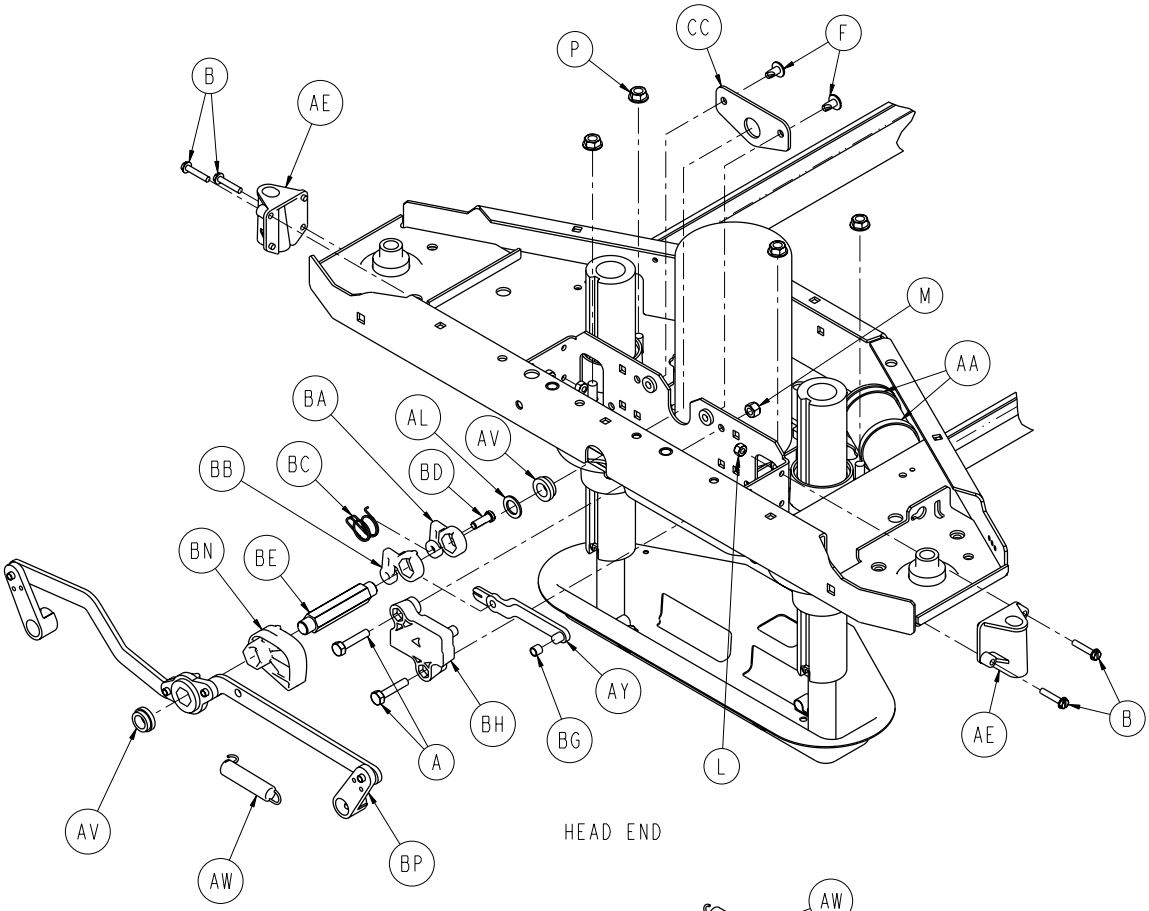

HEAD END

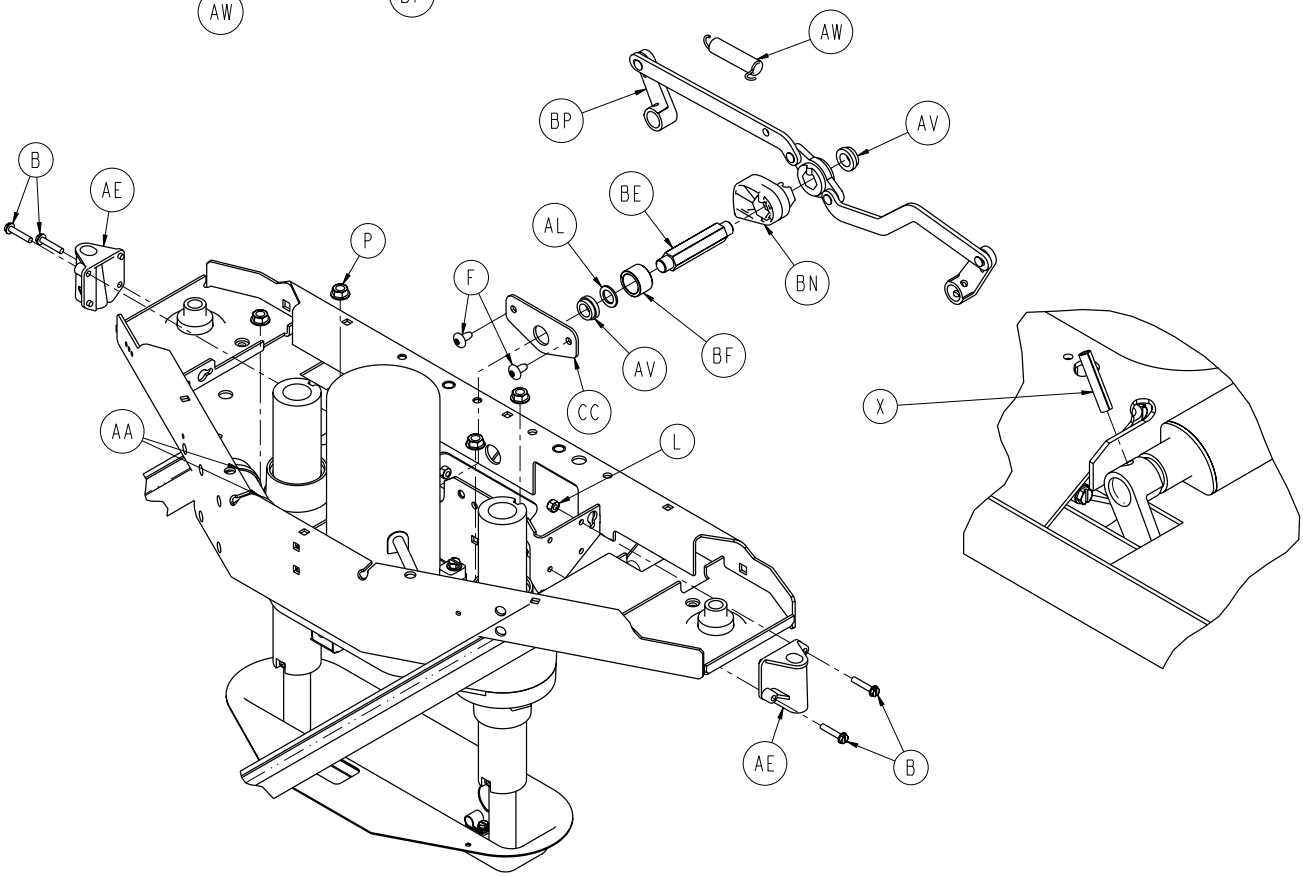

FOOT END

Return To Table of Contents

Base Assembly, Common Components

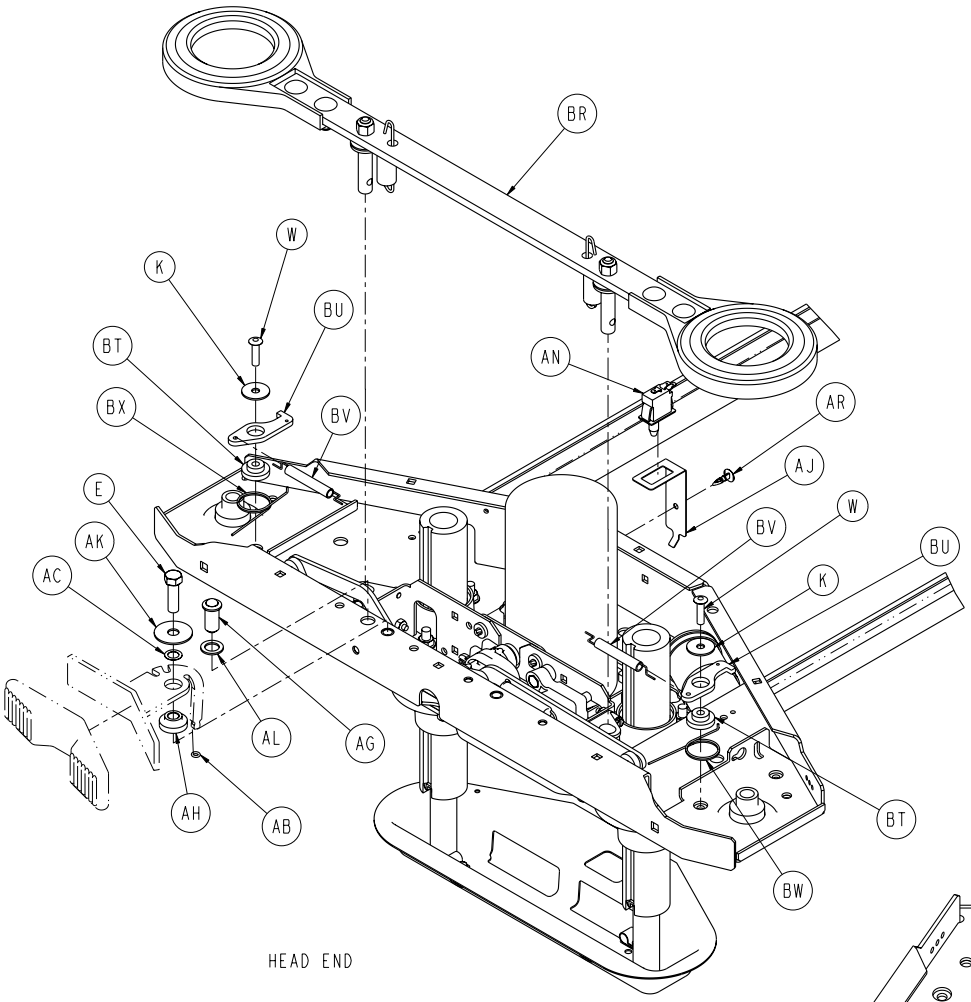

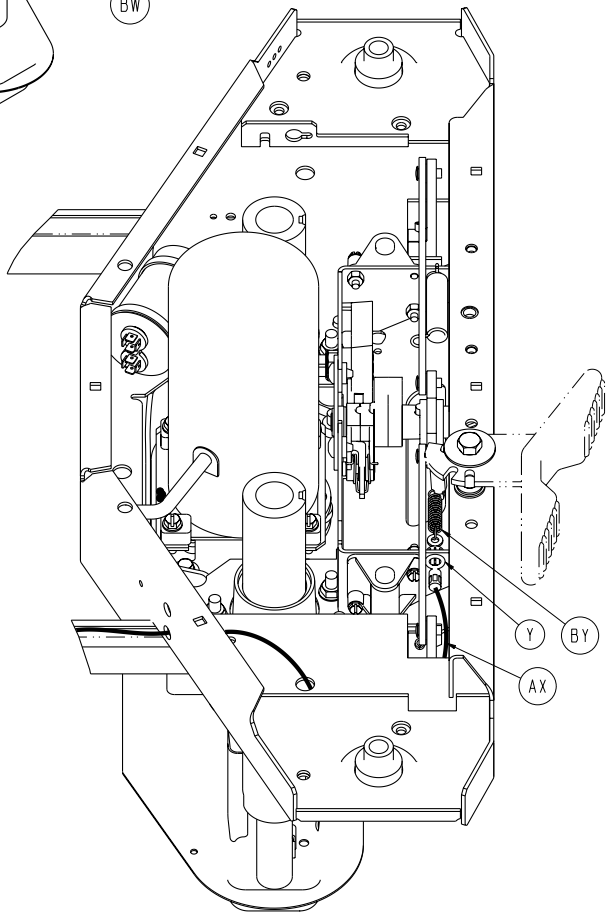

Return To Table of Contents

Base Assembly, Common Components

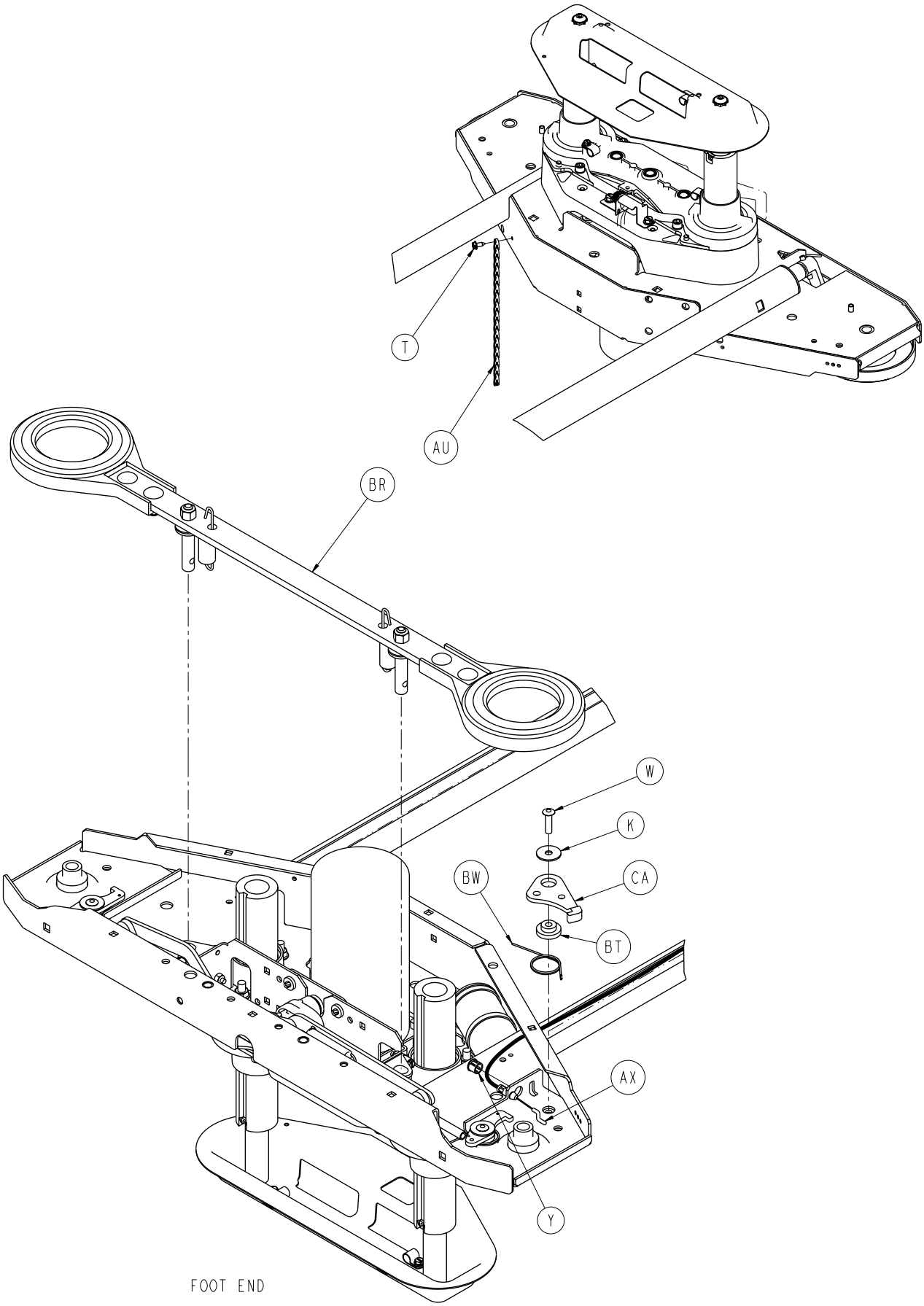

Return To Table of Contents

Base Assembly, Common Components

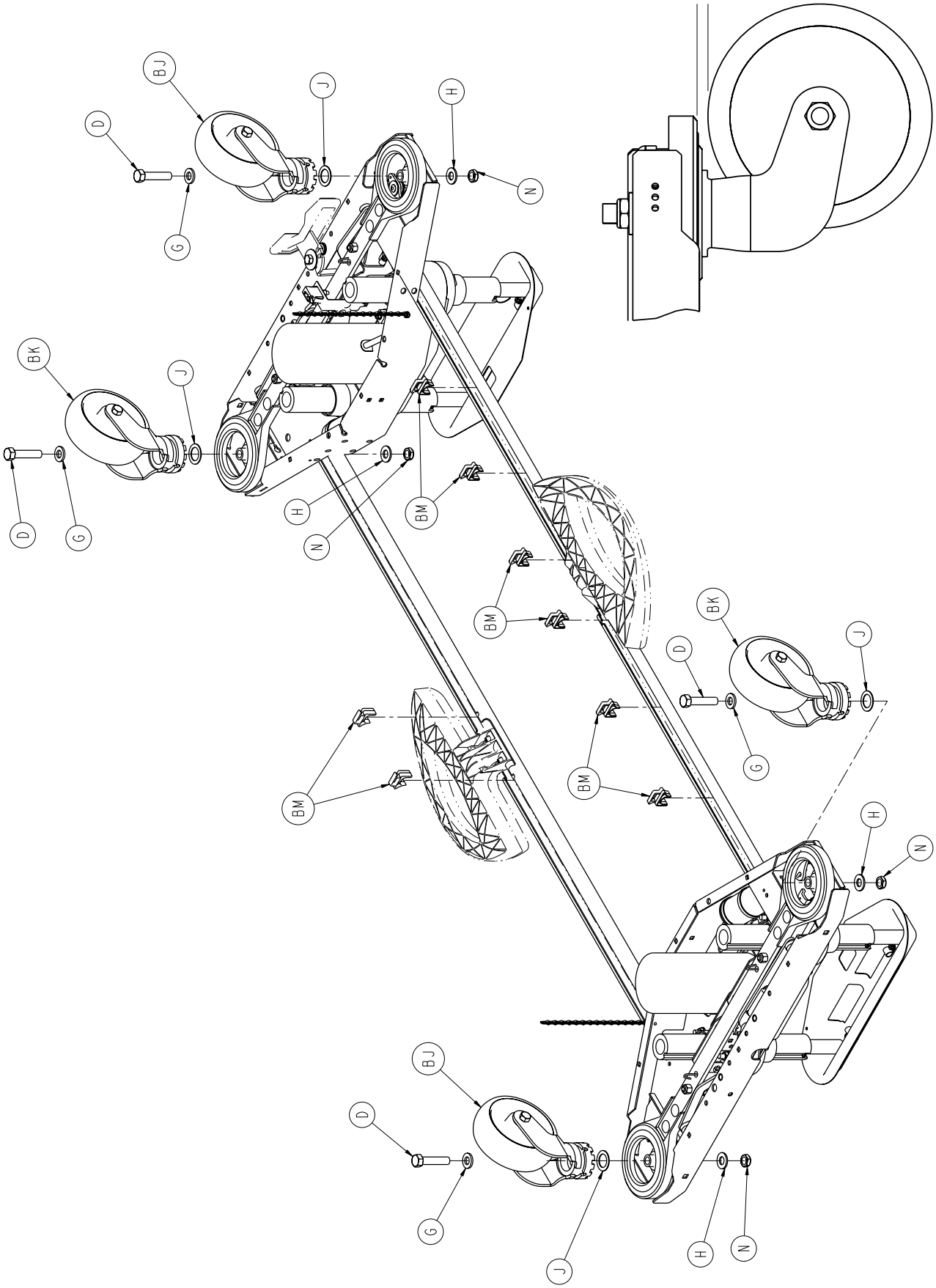

Return To Table of Contents

Base Assembly, Common Components

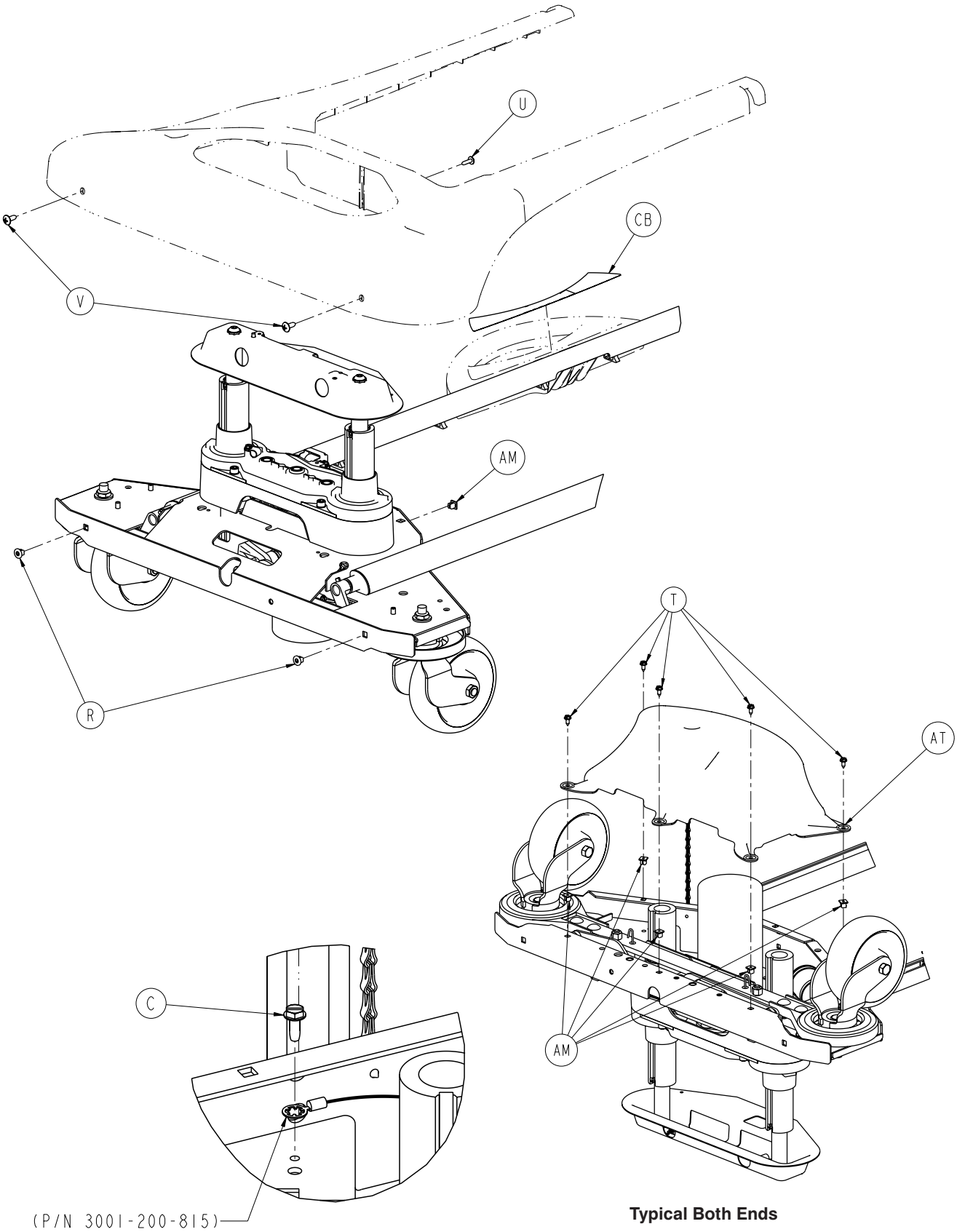

Typical Both Ends

Return To Table of Contents

Base Assembly, Common Components - 3006-200-002 (Reference Only)

Item	Part No.	Part Name	Qty.
A	0003-074-000	Hex Head Cap Screw	2
B	0003-122-000	Hex Washer Head Screw	8
C	0003-224-000	Hex Washer Head Screw	2
D	0003-333-000	Hex Head Cap Screw	4
E	0003-349-000	Hex Head Cap Screw	1
F	0007-052-000	Truss Head Torx	4
G	0011-310-000	Washer	4
H	0011-333-000	Washer	4
J	0011-343-000	Washer	4
K	0011-611-000	Washer	5
L	0016-002-000	Fiberlock Hex Nut	8
M	0016-028-000	Fiberlock Hex Nut	2
N	0016-049-000	Nylock Hex Nut	4
P	0016-098-000	Hex Flange Nut	8
R	0018-036-000	Plastic Clip Nut	4
T	0023-025-000	Slotted Hex Washer Head Screw	12
U	0023-080-000	Truss Head Screw	2
V	0023-092-000	Truss Head Phillip Screw	4
W	0025-191-000	Rivet	5
X	0026-014-000	Roll Pin	4
Y	0030-052-000	Heyco Snap Bushing	2
AA	0038-151-000	Cable Tie	4
AB	0045-008-000	O-Ring	1
AC	0052-305-000	Washer	1
AD	3000-200-305	Brake Shaft Bushing, RH	2
AE	3000-200-328	Brake Shaft Bushing	4
AF	3000-200-331	Brake Shaft Bushing, LH	2
AG	3000-200-337	Pushfit Ball Plunger	1
AH	3000-200-341	Steer Pedal Bushing	1
AJ	3000-200-343	Brake Switch Bracket	1
AK	3000-200-348	Wide Special Washer	1
AL	3000-200-349	Narrow Special Washer	3
AM	3000-300-002	Plastic Clip Nut	12
AN	3000-300-058	Plunger Switch	1
AP	3000-300-113	8” Cable Tie	4
AR	3000-300-115	Standoff	1
AT	3001-200-022	Bottom Cover Assembly	2
AU	3001-200-052	Grounding Chain	2
AV	3001-200-317	Cam Shaft Brake Bushing	4
AW	3001-200-334	Spring	2
AX	3001-200-342	Steer/Lock Cable	1
AY	3002-200-302	Brake Ratchet Link Assembly	1
BA	3002-200-305	Brake Ratchet Crank, Left	1
BB	3002-200-306	Brake Ratchet Crank, Right	1
BC	3002-200-307	Brake Latch Spring	1
BD	3002-200-308	Brake Ratchet Crank Pin	1
BE	3002-200-311	Brake Shaft	2
BF	3002-200-313	Brake Cam Spacer	1
BG	3002-200-316	Brake Track Roller	1

Return To Table of Contents

Base Assembly, Common Components - 3006-200-002 (Reference Only) (Continued)

Item	Part No.	Part Name	Qty.
BH	3002-201-301	Brake Ratchet Track	1
BJ	3006-200-060	Swivel Lock Caster Assembly	2
BK	3006-200-065	Steer/Swivel Caster Assembly, White	2
BL	3006-200-102	Base Weldment	1
BM	3006-200-306	Brake Shaft Pedal Bearing	8
BN	3006-200-312	Brake Cam	2
BP	3006-200-330	Brake Crank Assembly	2
BR	3006-200-335	Brake Bar Assembly	2
BT	3006-200-339	Steer/Swivel Lever Bushing	5
BU	3006-200-374	Swivel Lever	4
BV	3006-200-376	Swivel Lock Activation Spring	4
BW	3006-200-378	Swivel Lock Return Spring, RH	3
BX	3006-200-379	Swivel Lock Return Spring, LH	2
BY	3006-200-380	Steer Extension Spring	1
CA	3006-200-381	Steer/Swivel Lever	1
CB	3006-200-601	Brake Pedal Label	2
CC	3002-200-314	Brake Mounting Bracket	2
CD	3006-301-201	Lift Assembly, HE	1
CE	3006-301-251	Lift Assembly, FE	1

Return To Table of Contents

For Reference Only: 3006-200-003

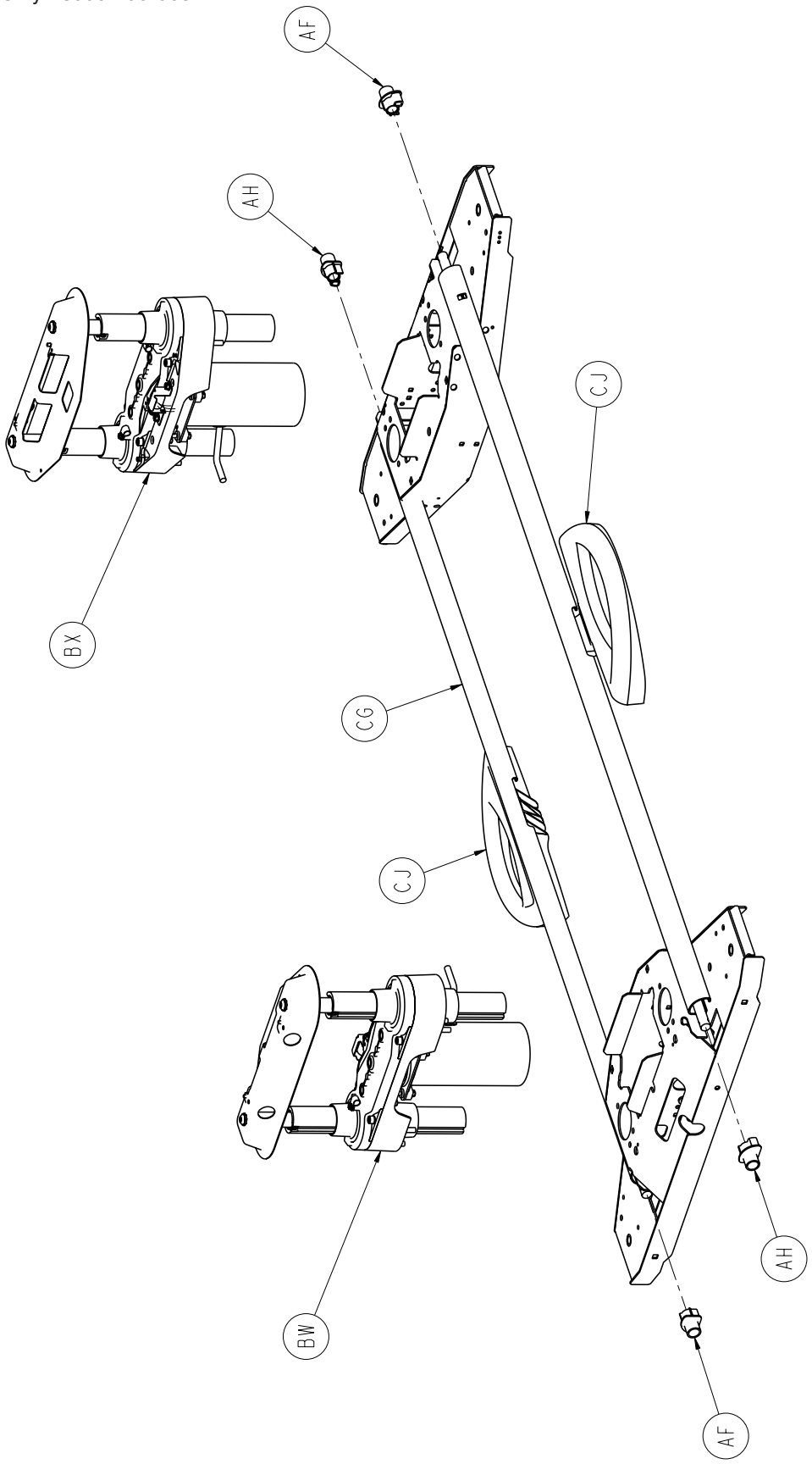

Return To Table of Contents

Base Assembly, Standard Bed

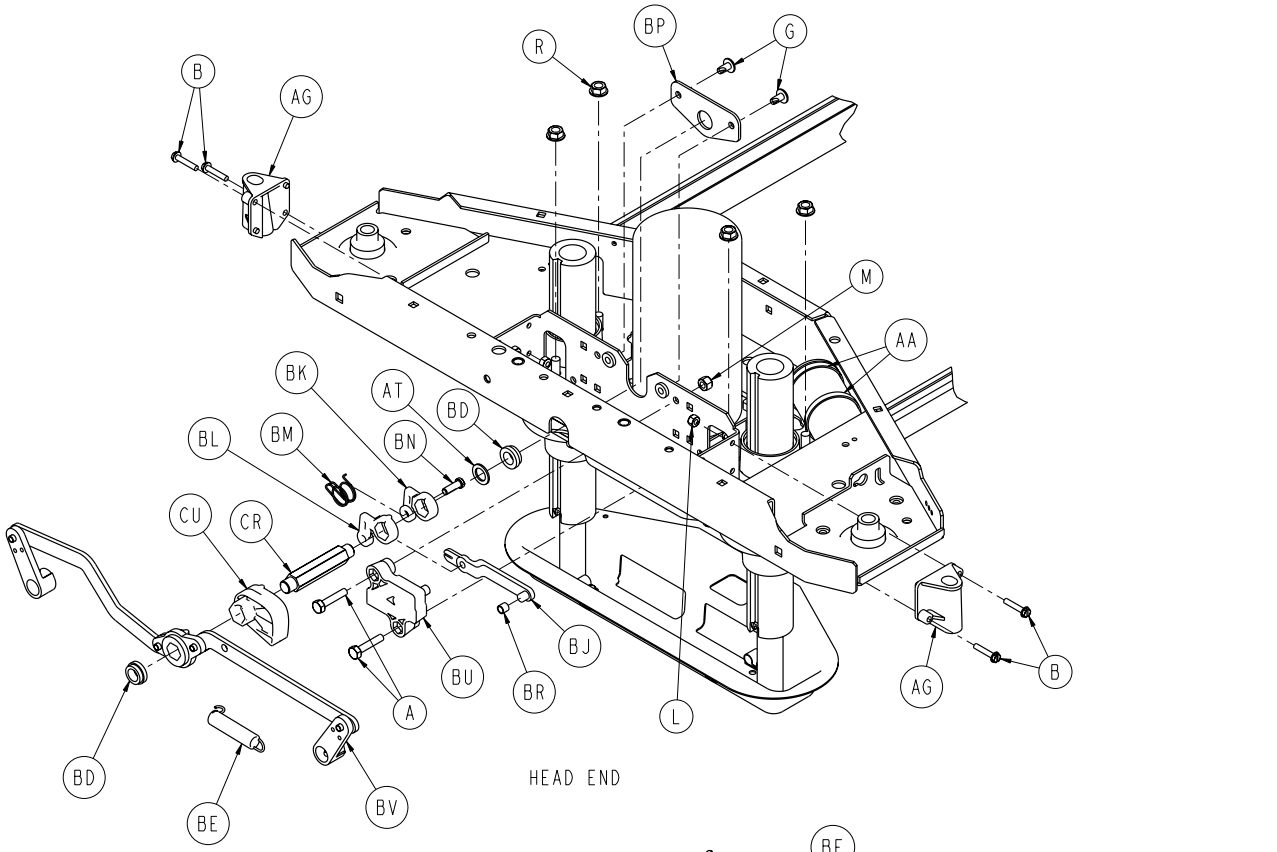

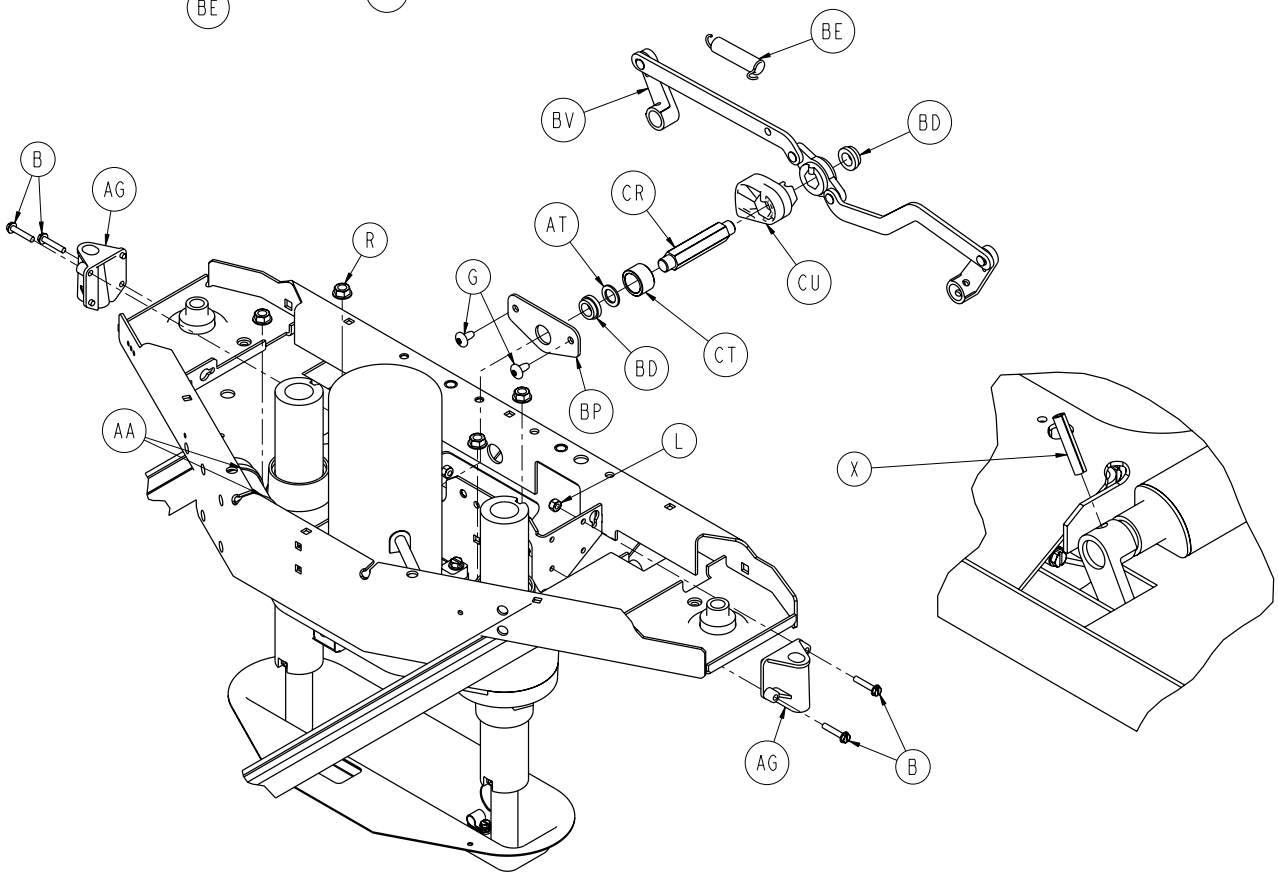

Return To Table of Contents

Base Assembly, Standard Bed

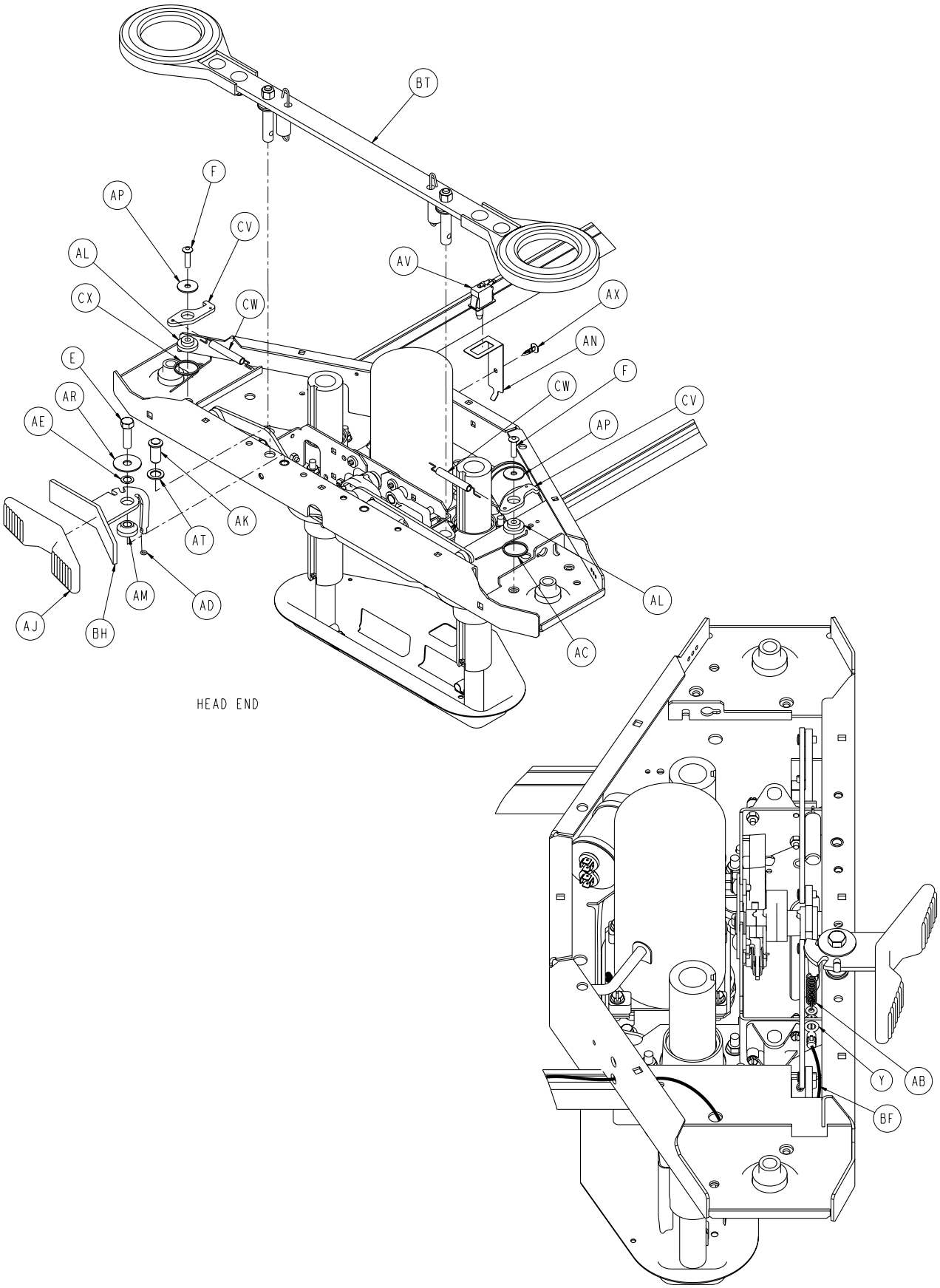

Return To Table of Contents

Base Assembly, Standard Bed

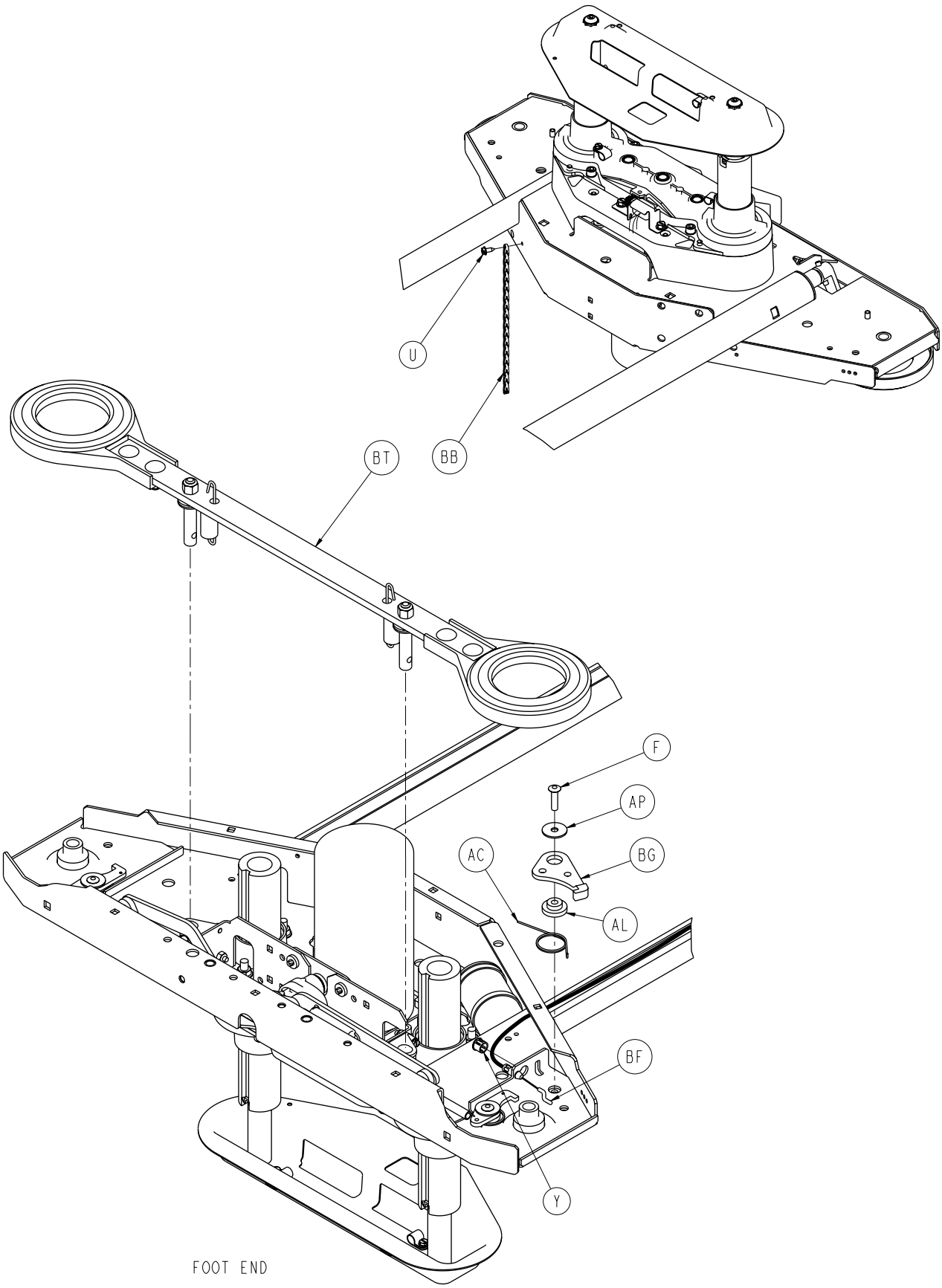

Return To Table of Contents

Base Assembly, Standard Bed

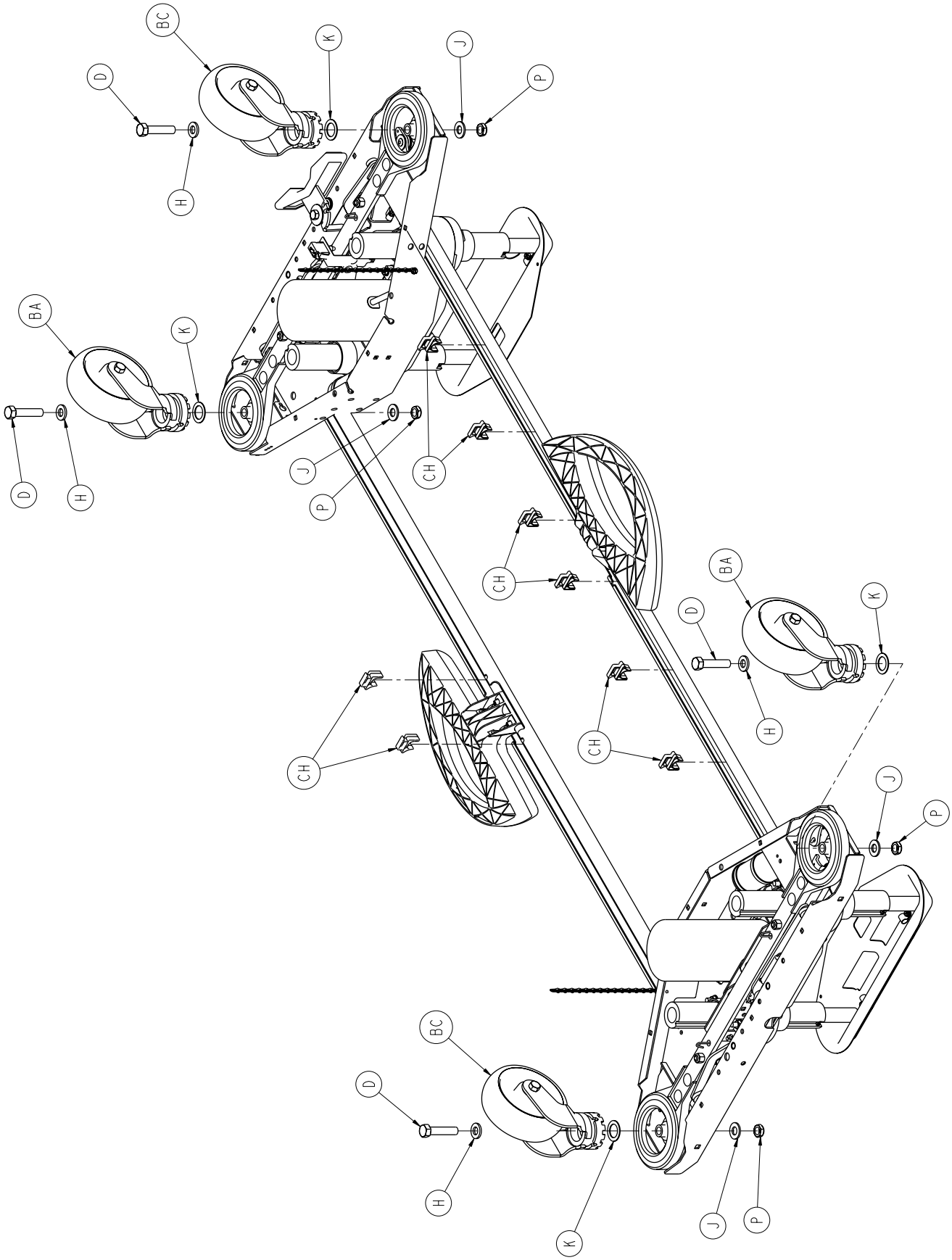

Return To Table of Contents

Base Assembly, Standard Bed

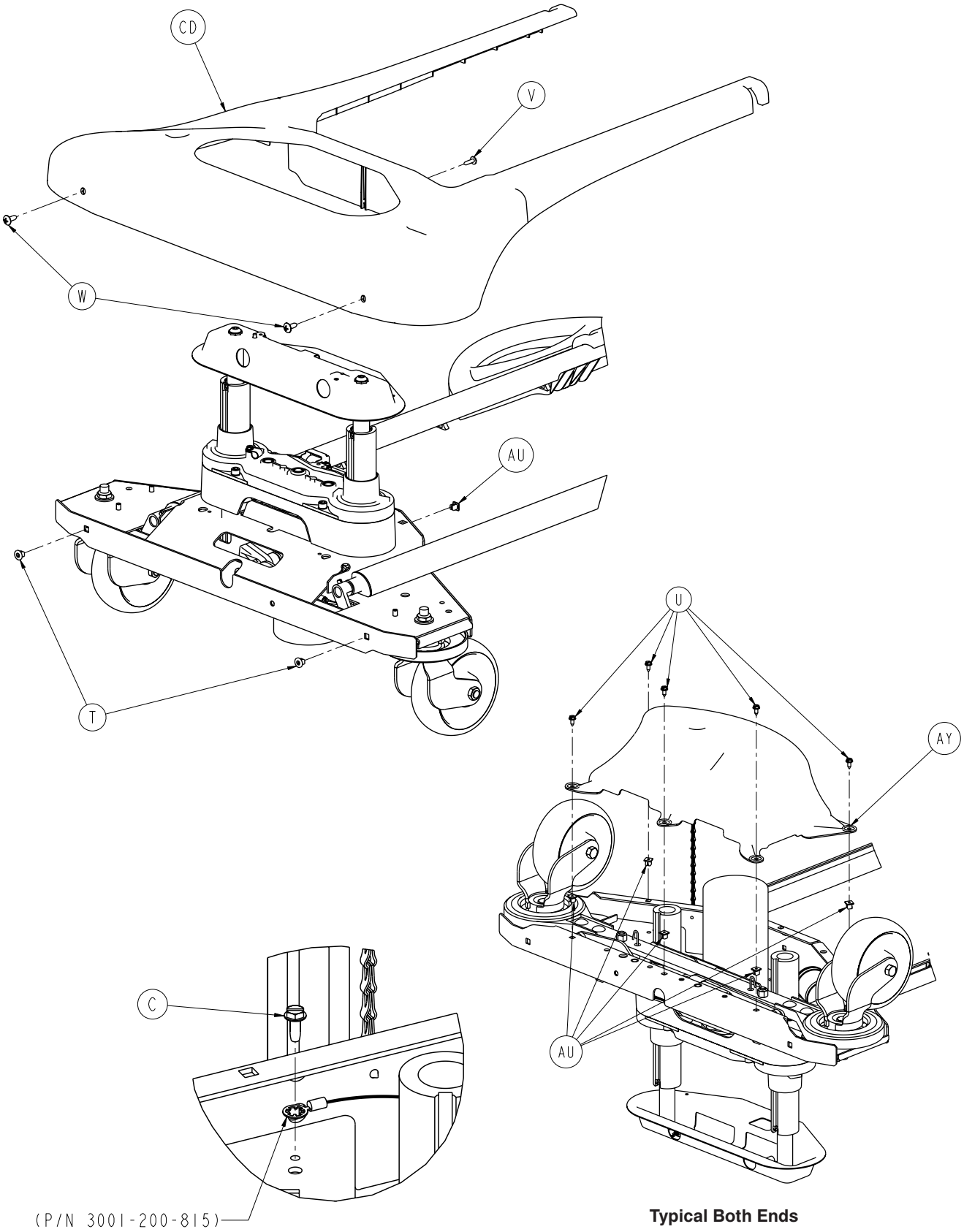

Typical Both Ends

Return To Table of Contents

Base Assembly, Standard Bed

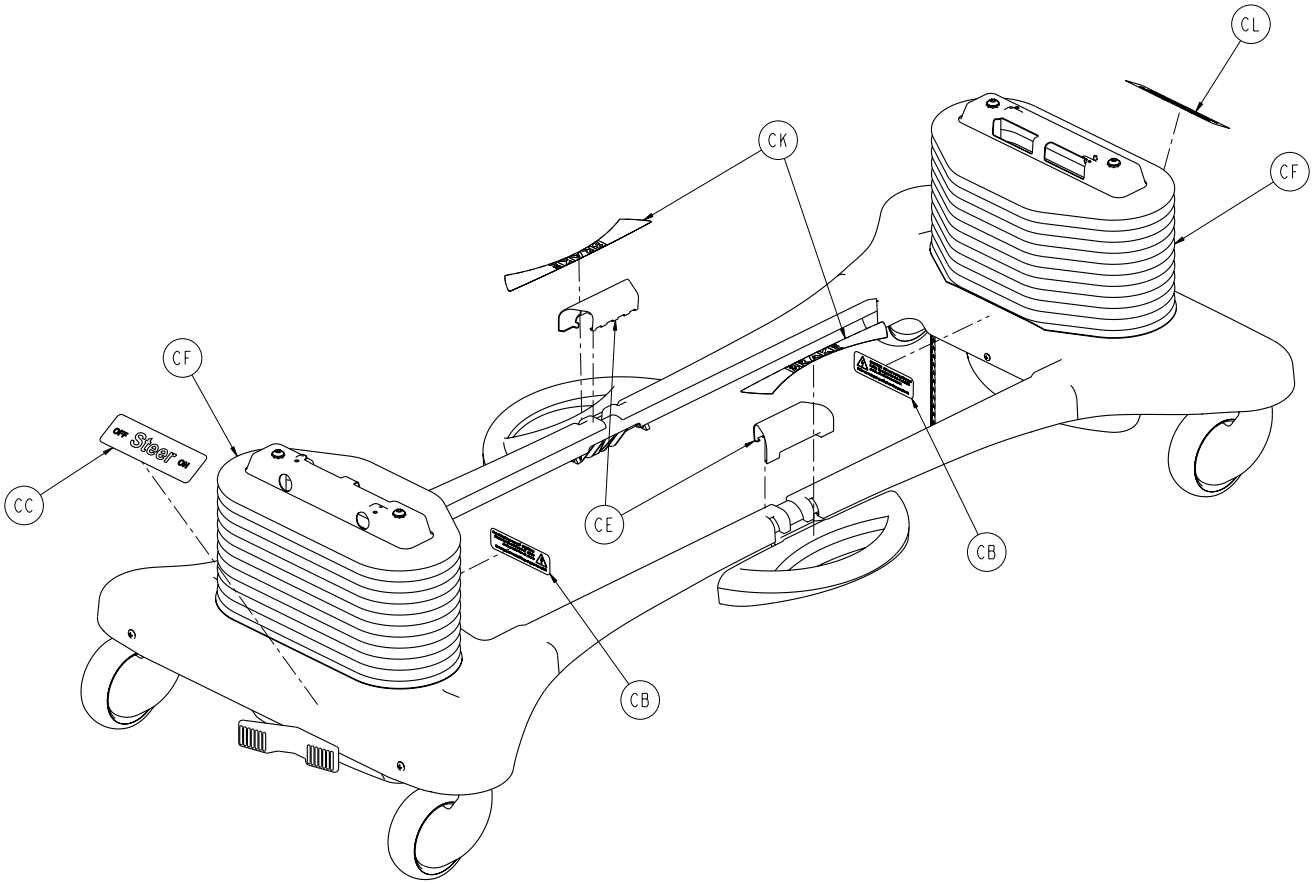

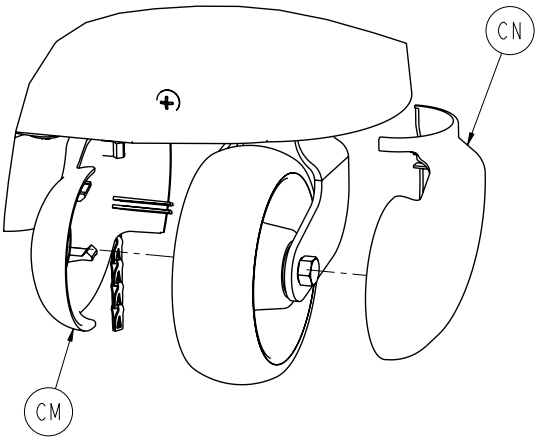

Return To Table of Contents

Base Assembly, Standard Bed - 3006-200-003 (Reference Only)

Item	Part No.	Part Name	Qty.
A	0003-074-000	Hex Head Cap Screw	2
B	0003-122-000	Hex Washer Head Screw	8
C	0003-224-000	Hex Washer Head Screw	2
D	0003-333-000	Hex Head Cap Screw	4
E	0003-349-000	Hex Head Cap Screw	1
F	0025-191-000	Rivet	5
G	0007-052-000	Truss Head Torx Screw	4
H	0011-310-000	Washer	4
J	0011-333-000	Washer	4
K	0011-343-000	Washer	4
L	0016-002-000	Fiberlock Hex Nut	8
M	0016-028-000	Fiberlock Hex Nut	2
P	0016-049-000	Nylock Hex Nut	4
R	0016-098-000	Hex Flange Nut	8
T	0018-036-000	Plastic Clip Nut	4
U	0023-025-000	Hex Washer Head Screw	12
V	0023-080-000	Truss Head S Torx Screw	2
W	0023-092-000	Truss Head Phillip	4
X	0026-014-000	Roll Pin	4
Y	0030-052-000	Heyco Snap Bushing	2
AA	0038-151-000	Cable Tie	4
AB	3006-200-380	Steer Extension Spring	1
AC	3006-200-378	Swivel Lock Return Spring, RH	3
AD	0045-008-000	O-Ring	1
AE	0052-305-000	Washer	1
AF	3000-200-305	Brake Shaft Bushing, RH	2
AG	3000-200-328	Brake Guide Bushing	4
AH	3000-200-331	Brake Shafting Bushing, LH	2
AJ	3000-200-336	Steer Pedal	1
AK	3000-200-337	Pushfit Ball Plunger	1
AL	3006-200-339	Steer/Swivel Level Bushing	5
AM	3000-200-341	Steer Pedal Bushing	1
AN	3000-200-343	Brake Switch Bracket	1
AP	0011-611-000	Washer	5
AR	3000-200-348	Wide Washer, Special	1
AT	3000-200-349	Narrow Washer, Special	3
AU	3000-300-002	Plastic Clip Nut	12
AV	3000-300-058	Plunger Switch	1
AW	3000-300-113	8'' Cable Tie	4
AX	3000-300-115	Standoff	1
AY	3001-200-022	Bottom Cover Assembly	2
BA	3006-200-065	Steer Swivel Caster Ass'y, White	2
BB	3001-200-052	Grounding Chain	2
BC	3006-200-060	Swivel Lock Caster Assembly	2
BD	3001-200-317	Brake Cam Shaft Bushing	4
BE	3001-200-334	Spring	2
BF	3001-200-342	Steer Lock Cable	1
BG	3006-200-381	Steer Swivel Lever	1
BH	3006-201-371	Steer Pedal Arm Assembly	1
BJ	3002-200-302	Brake Ratchet Link Assembly	1
BK	3002-200-305	Brake Ratchet Crank, Left	1

Return To Table of Contents

Base Assembly, Standard Bed, Common Components - 3006-200-003 (Reference Only)

Item	Part No.	Part Name	Qty.
BL	3002-200-306	Brake Ratchet Crank, Right	1
BM	3002-200-307	Brake Latch Spring	1
BN	3002-200-308	Brake Ratchet Crank Pin	1
BP	3002-200-314	Brake Mounting Bracket	2
BR	3002-200-316	Brake Track Roller	1
BT	3006-200-335	Brake Bar Assembly	2
BU	3002-201-301	Brake Ratchet Track	1
BV	3006-200-330	Brake Crank Assembly	2
BW	3006-301-201	Lift Assembly, Head End	1
BX	3006-301-251	Lift Assembly, Foot End	1
CB	3006-002-708	Shock Hazard Label	2
CC	3006-090-013	Steer Lock Label	1
CD	3006-200-009	Uni Pan Cover	2
CE	3006-200-011	Uni Pan Cover Clip	2
CF	3006-200-012	Bellows	1
CG	3006-200-102	Base Weldment	1
CH	3006-200-306	Brake Shaft Pedal Bearing	8
CJ	3006-200-340	Brake Shaft Assembly	2
CK	3006-200-601	Brake Pedal label	2
CL	3006-200-602	Base Logo Label	1
CM	3006-200-138	Caster Cover, LH	4
CN	3006-200-139	Caster Cover, RH	4
CR	3002-200-311	Brake Shaft	2
CT	3002-200-313	Brake Cam Spacer	1
CU	3006-200-312	Brake Cam	2
CV	3006-200-374	Swivel Lever	4
CW	3006-200-376	Swivel Lock Activation Spring	4
CX	3006-200-379	Sivel Lock Return Spring, LH	2

Return To Table of Contents

Notes

Return To Table of Contents

Base Ass’y, Battery Backup or Zoom® Option, Common Comp.

For Reference Only: 3006-200-004

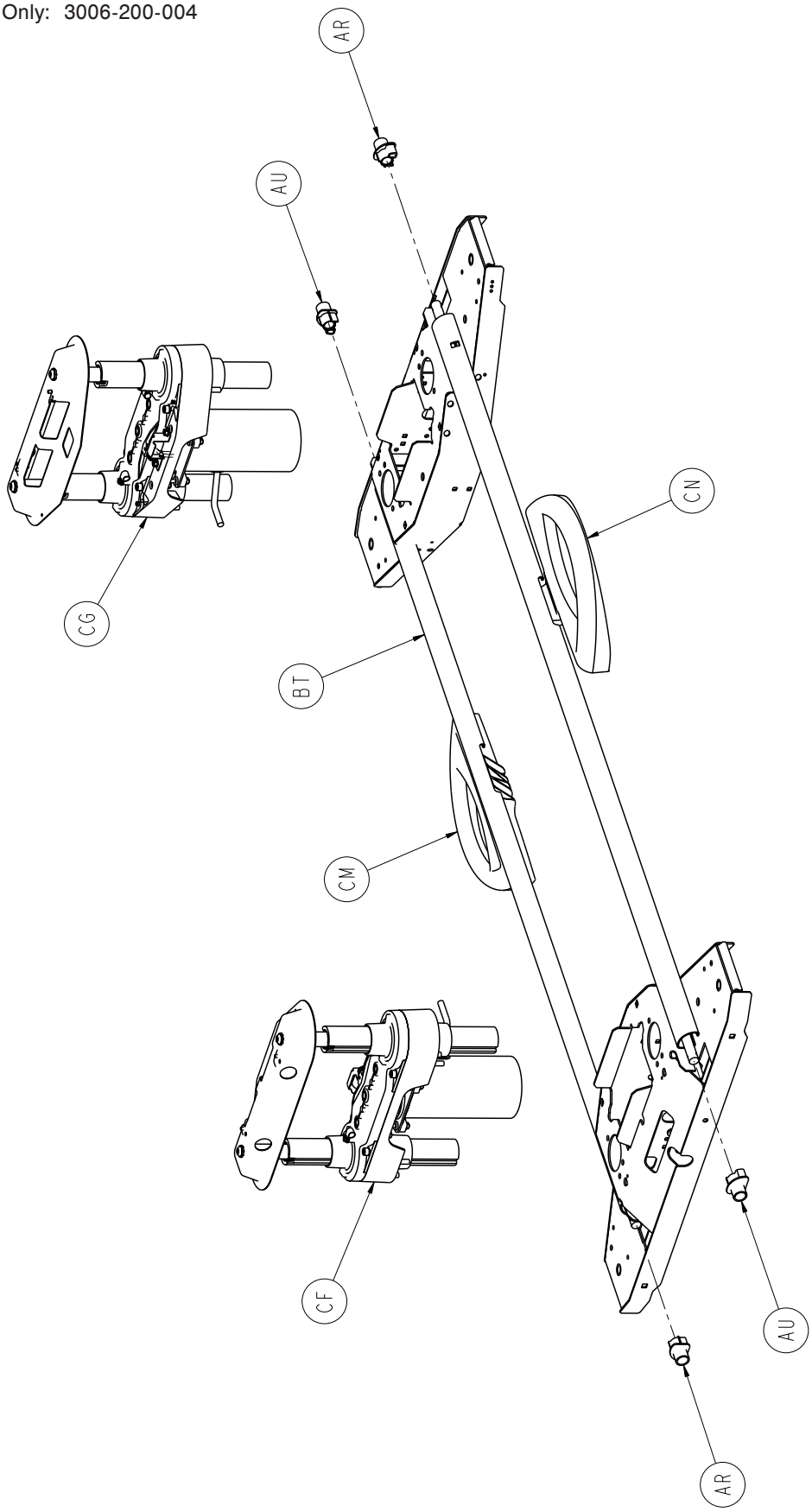

Return To Table of Contents

Base Ass'y, Battery Backup or Zoom® Option, Common Comp.

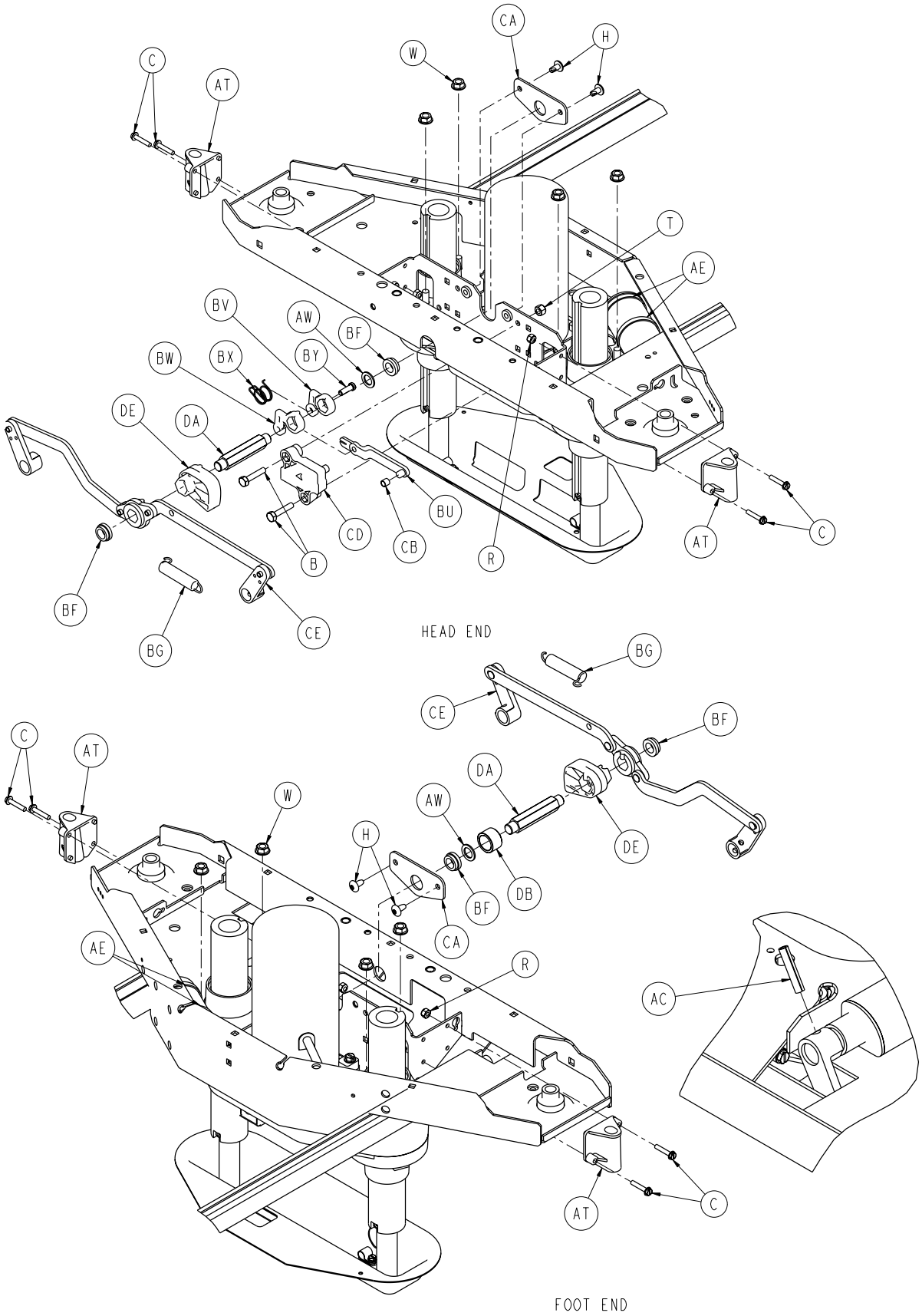

Return To Table of Contents

Base Ass'y, Battery Backup or Zoom® Option, Common Comp.

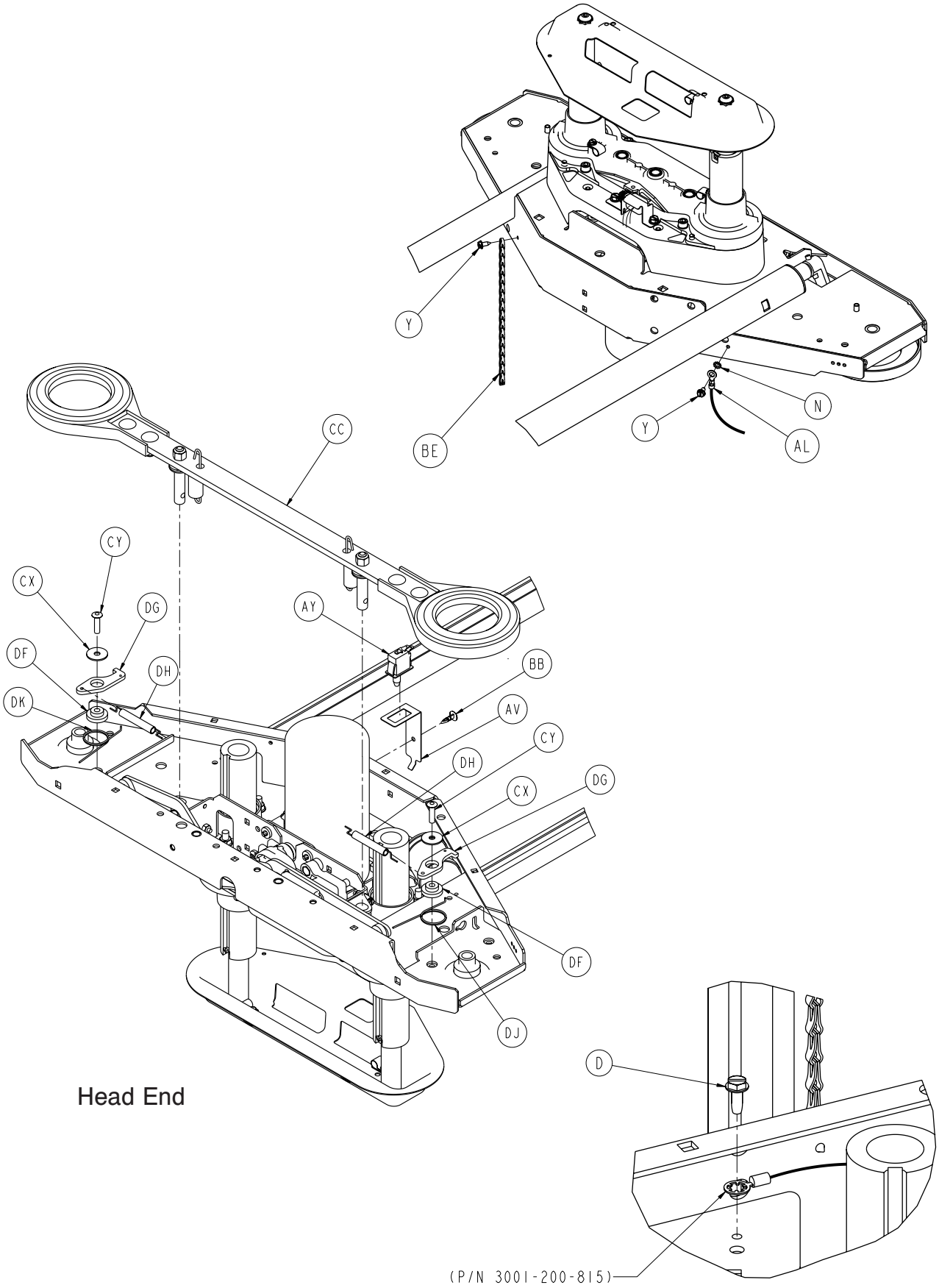

Return To Table of Contents

Base Ass'y, Battery Backup or Zoom® Option, Common Comp.

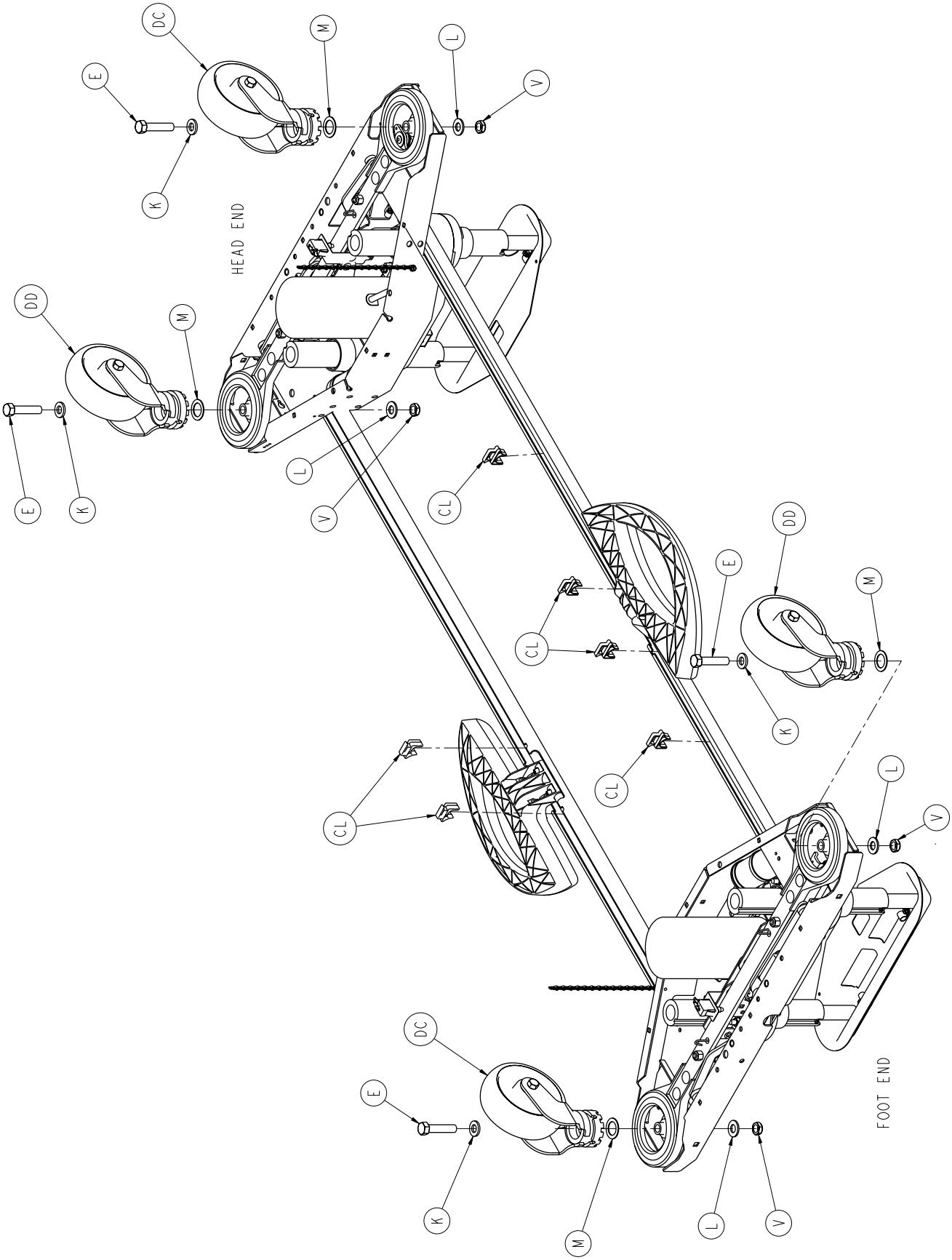

Return To Table of Contents

Base Ass'y, Battery Backup or Zoom® Option, Common Comp.

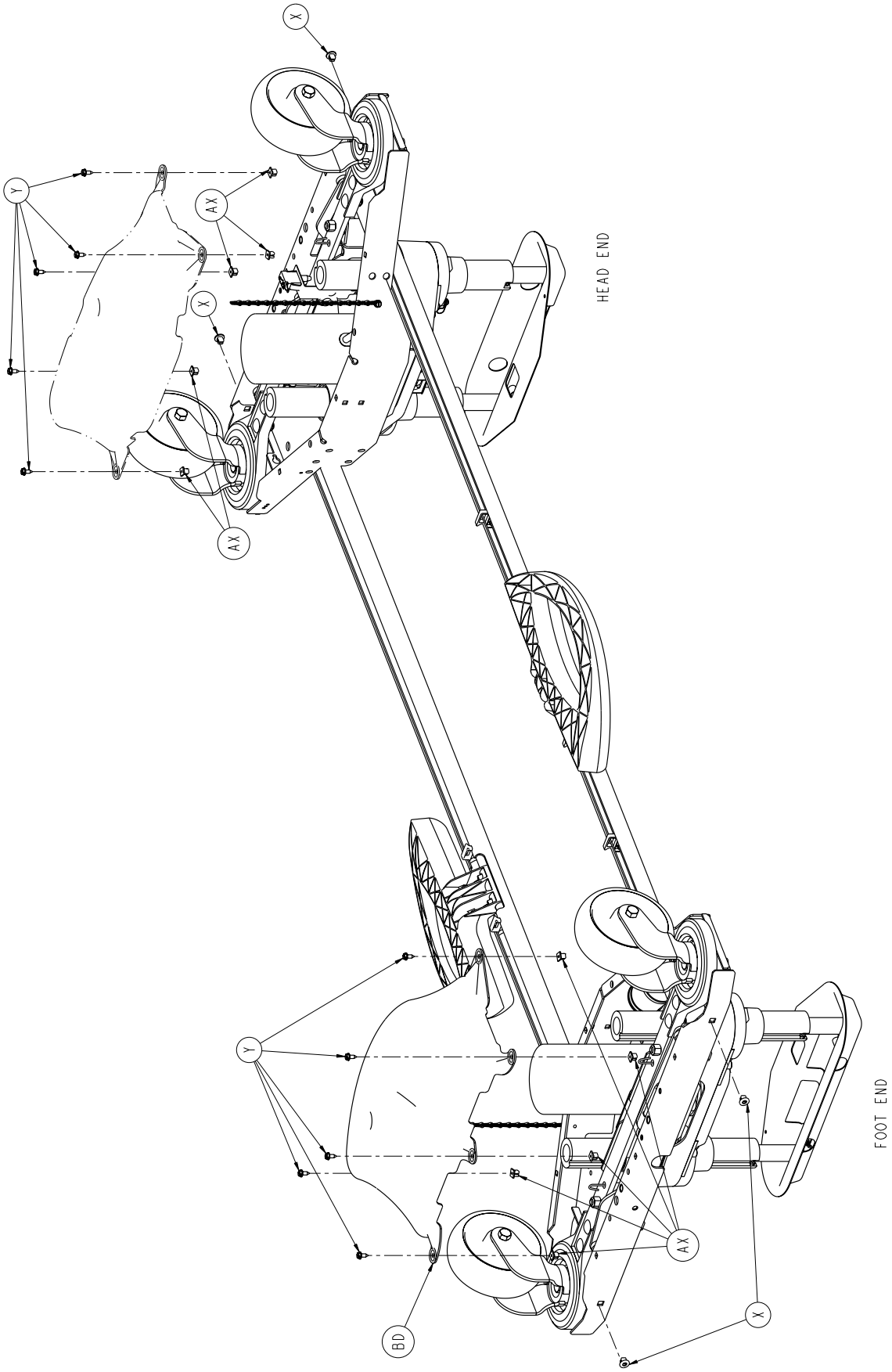

Return To Table of Contents

Base Ass’y, Battery Backup or Zoom® Option, Common Comp.

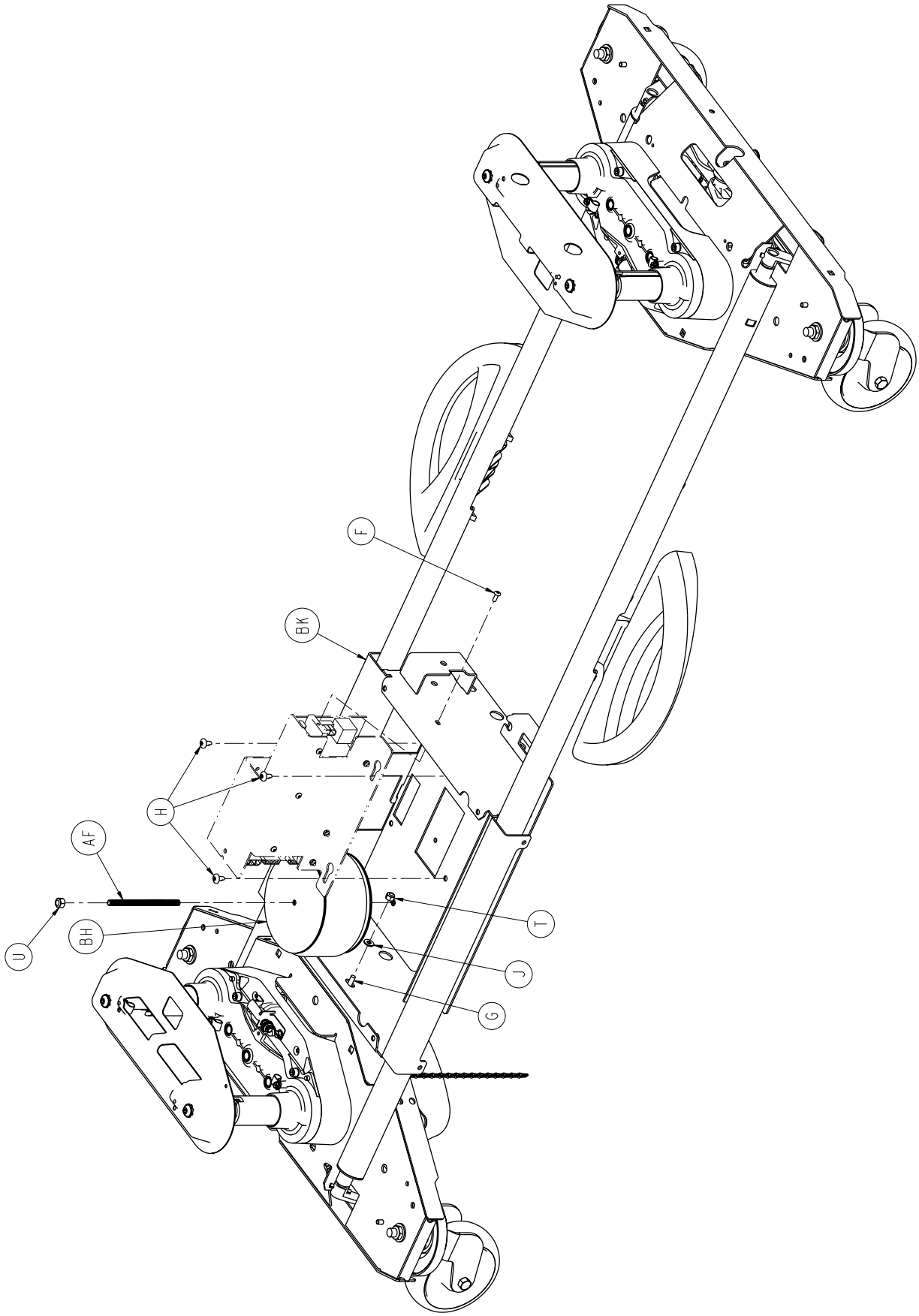

Return To Table of Contents

Base Ass'y, Battery Backup or Zoom® Option, Common Comp.

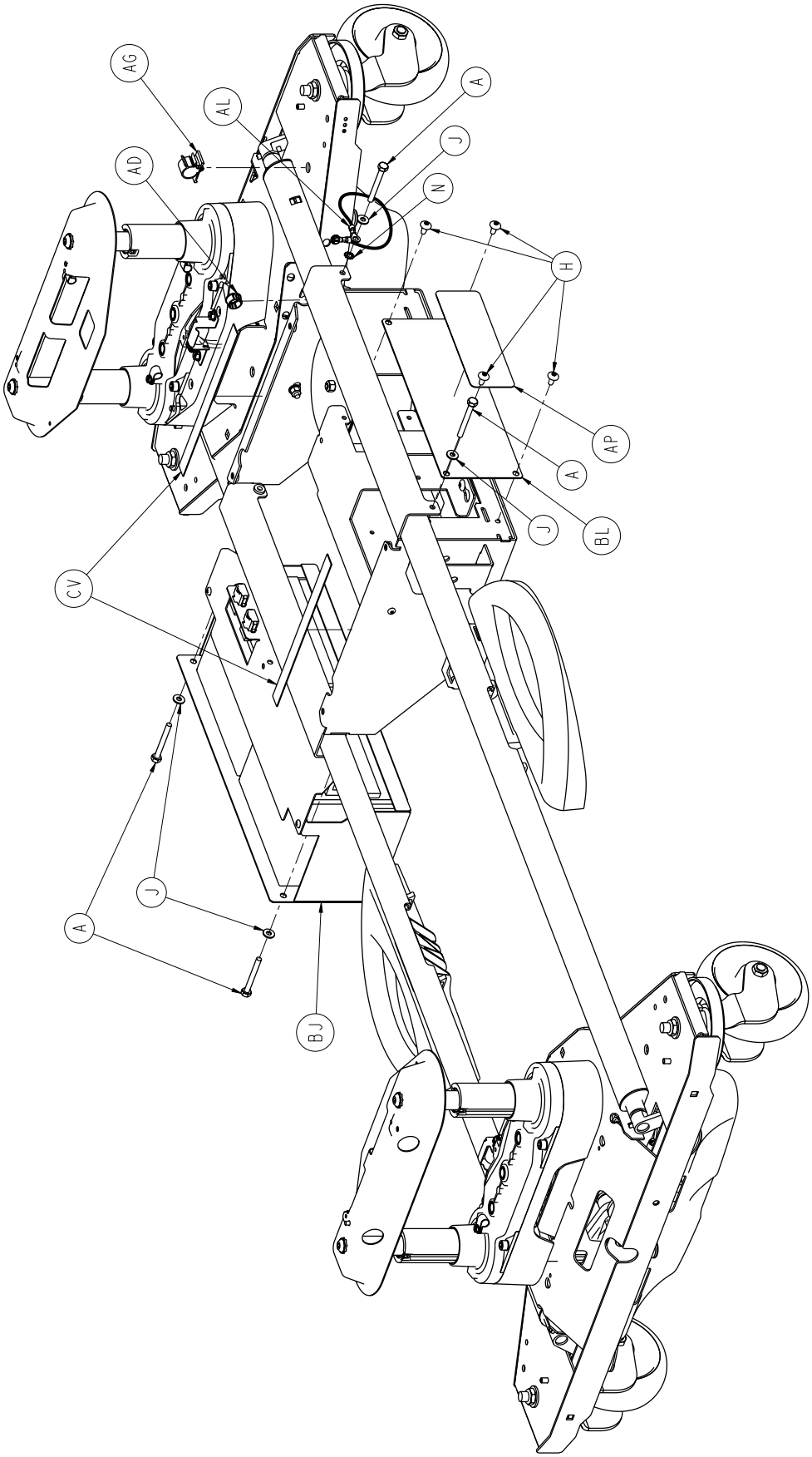

Return To Table of Contents

Base Ass'y, Battery Backup or Zoom® Option, Common Comp.

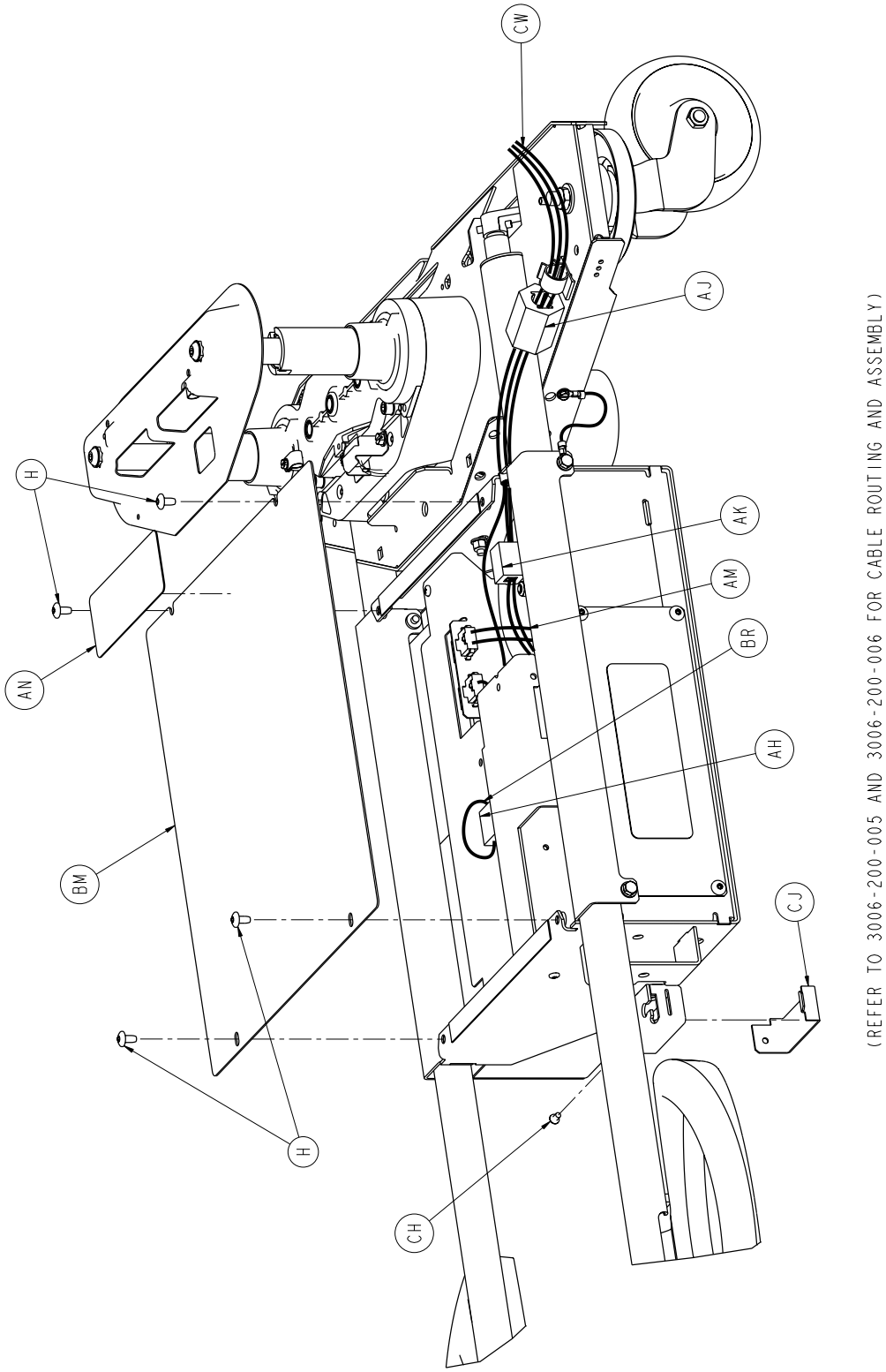

Return To Table of Contents

Base Ass'y, Battery Backup or Zoom® Option, Common Comp.

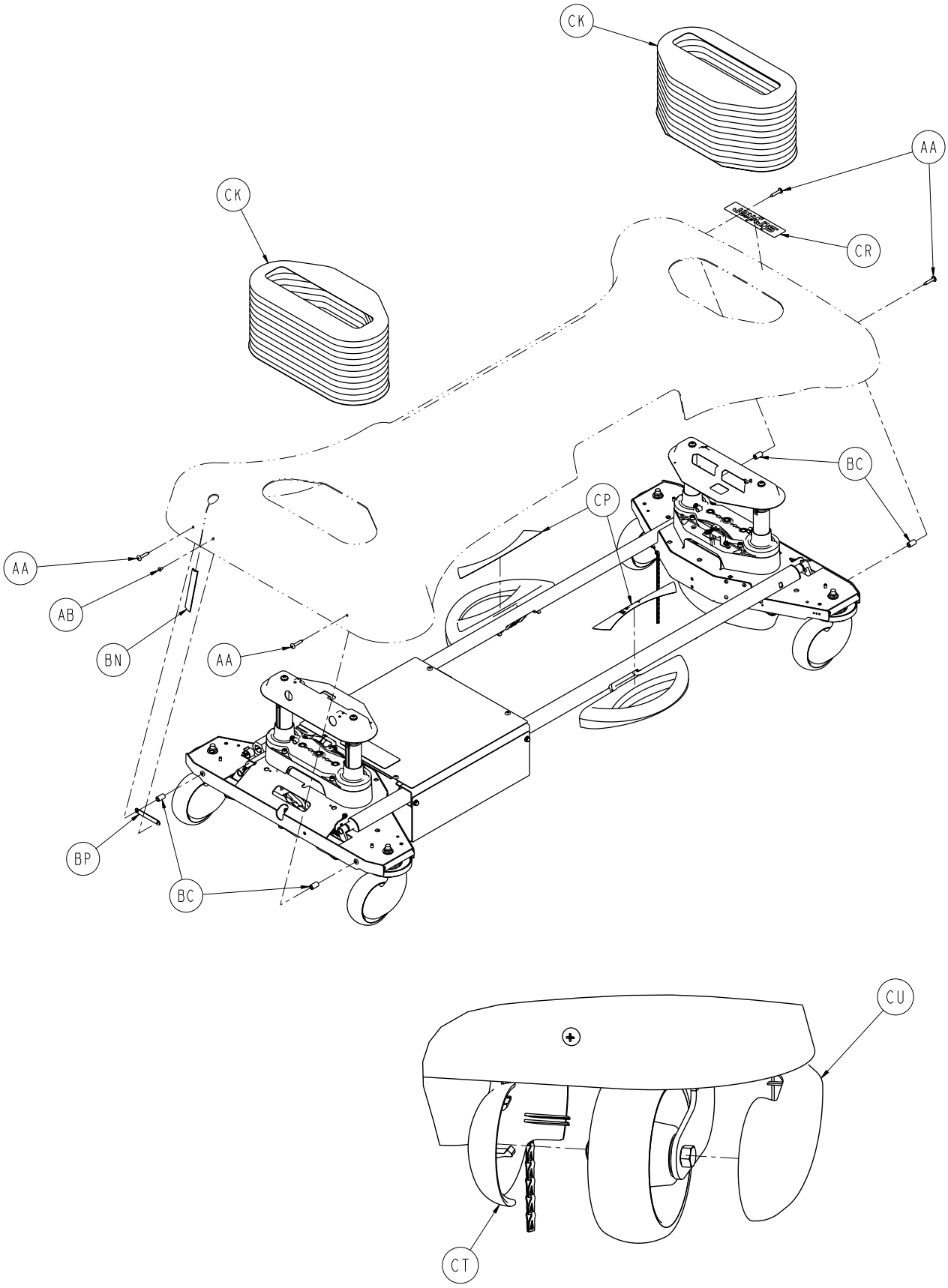

Return To Table of Contents

Base Assembly, Battery Backup or Zoom® Option, Common Components - 3006-200-004 (Reference Only)

Item	Part No.	Part Name	Qty.
A	0003-032-000	Hex Head Cap Screw	4
B	0003-074-000	Hex Head Cap Screw	2
C	0003-122-000	Hex Washer Head Screw	8
D	0003-224-000	Hex Washer Head Screw	2
E	0003-333-000	Hex Head Cap Screw	4
F	0004-301-000	Pan Head Machine Screw	1
G	0005-017-000	Carriage Bolt	1
H	0007-052-000	Truss Head Torx	15
J	0011-063-000	Washer	5
K	0011-310-000	Washer	4
L	0011-333-000	Washer	4
M	0011-343-000	Washer	4
N	0013-010-000	External Tooth Star Washer	2
R	0016-002-000	Fiberlock Hex Nut	8
T	0016-028-000	Fiberlock Hex Nut	3
U	0016-036-000	Nylock Hex Nut	1
V	0016-049-000	Nylock Hex Nut	4
W	0016-098-000	Hex Flange Nut	8
X	0018-036-000	Plastic Clip Nut	4
Y	0023-025-000	Hex Washer Head Tapping Screw	13
AA	0023-281-000	Truss Head Self Tapping Screw	4
AB	0025-079-000	Dome Head Pop Rivet	1
AC	0026-014-000	Roll Pin	4
AD	0030-038-000	Heyco Split Bushing	1
AE	0038-151-000	Cable Tie	4
AF	0058-090-000	Threaded Stud	1
AG	0059-133-000	Push-Mount Wire Clip	1
AH	0059-144-000	Split Ferrite	1
AJ	0059-192-000	Split Ferrite Core	1
AK	0059-194-000	Split Ferrite	1
AL	3002-300-870	Ground Strap	1
AM	2040-001-804	Power Board DC Power Cable	1
AN	2040-001-101	Power Board Cover Label	1
AP	2040-001-102	Charger Box Cover Label	1
AR	3000-200-305	Brake Shaft Bushing, RH	2
AT	3000-200-328	Brake Guide Bushing	4
AU	3000-200-331	Brake Shaft Bushing, LH	2
AV	3000-200-343	Brake Switch Bracket	1
AW	3000-200-349	Narrow, Special Washer	2
AX	3000-300-002	Plastic Clip Nut	10
AY	3000-300-058	Plunger Switch	1
BA	3000-300-113	8" Cable Tie	4
BB	3000-300-115	Standoff	1
BC	3000-300-428	Gatch Link Sleeve	4
BD	3001-200-022	Bottom Cover Assembly	1
BE	3001-200-052	Grounding Chain	2
BF	3001-200-317	Cam Shaft Brake Bushing	4
BG	3001-200-334	Spring	2
BH	3002-001-010	Transformer	1
BJ	3002-001-015	Battery Tray Assembly	1
BK	3002-001-050	Charger Box Weldment	1

Return To Table of Contents

Base Assembly, Battery Backup or Zoom® Option, Common Components (Continued) - 3006-200-004 (Reference Only)

Item	Part No.	Part Name	Qty.
BL	3002-001-068	Charger/Inverter Side Cover	1
BM	3002-001-071	Charger Box Lid	1
BN	3002-001-078	Hood Slot Trim	1
BP	3002-001-079	Hood Slot Trim Bracket	1
BR	3002-001-802	Battery Cable Inverter	1
BT	3006-200-104	Base Weldment	1
BU	3002-200-302	Brake Ratchet Link Assembly	1
BV	3002-200-305	Brake Ratchet Crank, Left	1
BW	3002-200-306	Brake Ratchet Crank, Right	1
BX	3002-200-307	Brake Latch Spring	1
BY	3002-200-308	Brake Ratchet Crank Pin	1
CA	3002-200-314	Brake Mounting Bracket, White	2
CB	3002-200-316	Brake Track Roller	1
CC	3006-200-335	Brake Bar Assembly	2
CD	3002-201-301	Brake Ratchet Track	1
CE	3006-200-330	Brake Crank Assembly	2
CF	3006-301-201	Lift Assembly, Head End	1
CG	3006-301-251	Lift Assembly, Foot End	1
CH	0004-307-000	Socket Head Cap Screw	1
CJ	2040-001-103	Switch Bracket Cover	1
CK	3006-200-012	Bellows	2
CL	3006-200-306	Brake Shaft Pedal Bearing	6
CM	3006-200-341	Brake Shaft Assembly, LH	1
CN	3006-200-342	Brake Shaft Assembly, RH	1
CP	3006-200-601	Brake Pedal Label	2
CR	3006-200-602	Base Logo Label	1
CT	3006-200-138	Caster Cover, LH	4
CU	3006-200-139	Caster Cover, RH	4
CV	7000-001-326	Closed Cell Sealing Tape	2
CW	3002-001-801	Umbilical Cord Assembly	1
CX	0011-611-000	Washer	4
CY	0025-191-000	Rivet	4
DA	3002-200-311	Brake Shaft	2
DB	3002-200-313	Brake Cam Spacer	1
DC	3006-200-060	Swivel Lock Caster Assembly	2
DD	3006-200-065	Steer/Swivel Lock Caster Assembly, White	2
DE	3006-200-312	Brake Cam	2
DF	3006-200-339	Steer/Swivel Lever Bushing	4
DG	3006-200-374	Swivel Lever	4
DH	3006-200-376	Swivel Lock Activation Spring	4
DJ	3006-200-378	Swivel Lock Return Spring, RH	2
DK	3006-200-379	Swivel Lock Return Spring, LH	2

Return To Table of Contents

Base Assembly, Battery Backup Option

For Reference Only: 3006-200-006

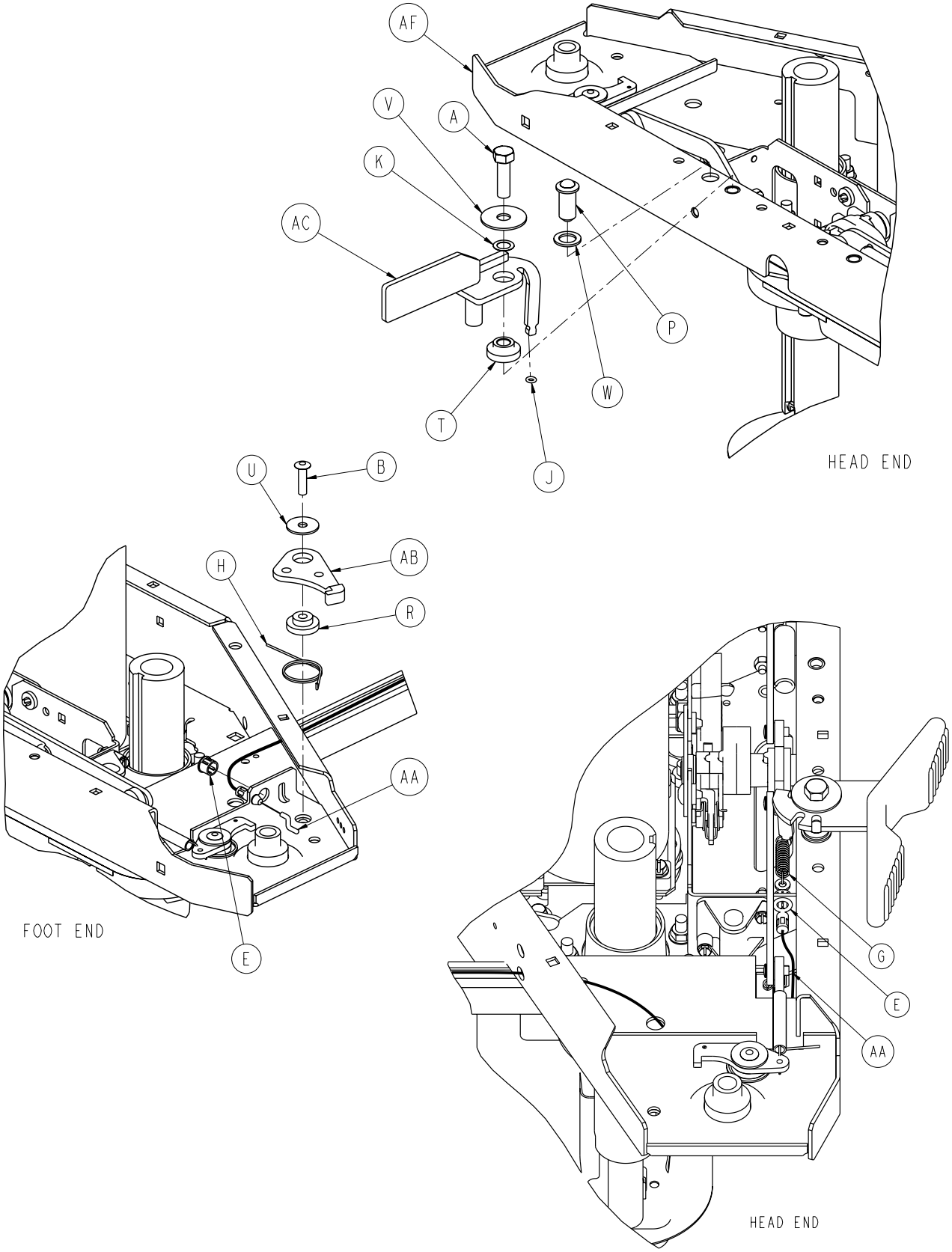

Return To Table of Contents

Base Assembly, Battery Backup Option

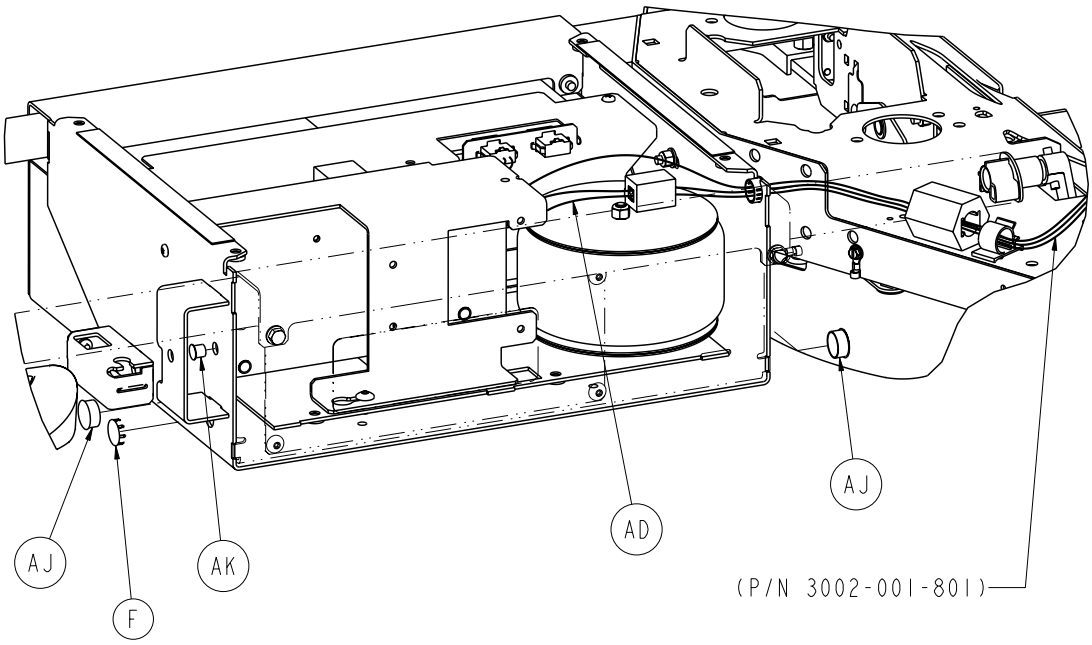

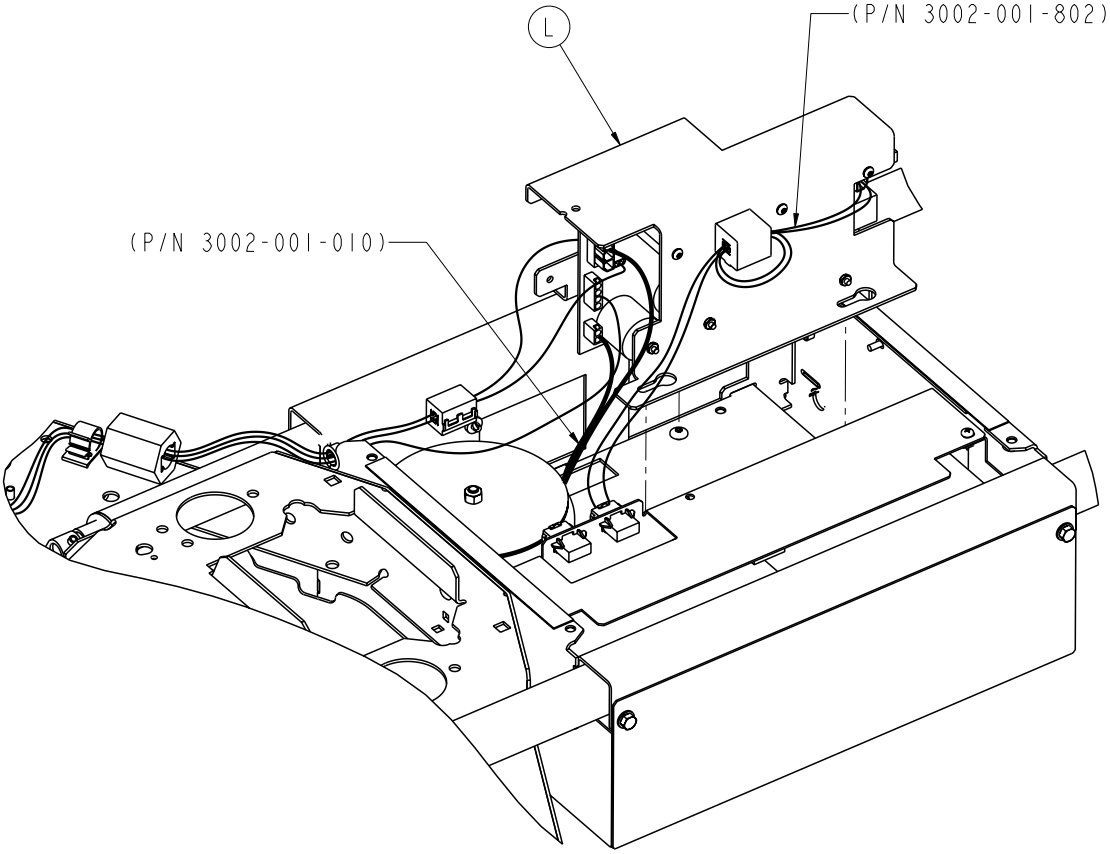

Return To Table of Contents

Base Assembly, Battery Backup Option

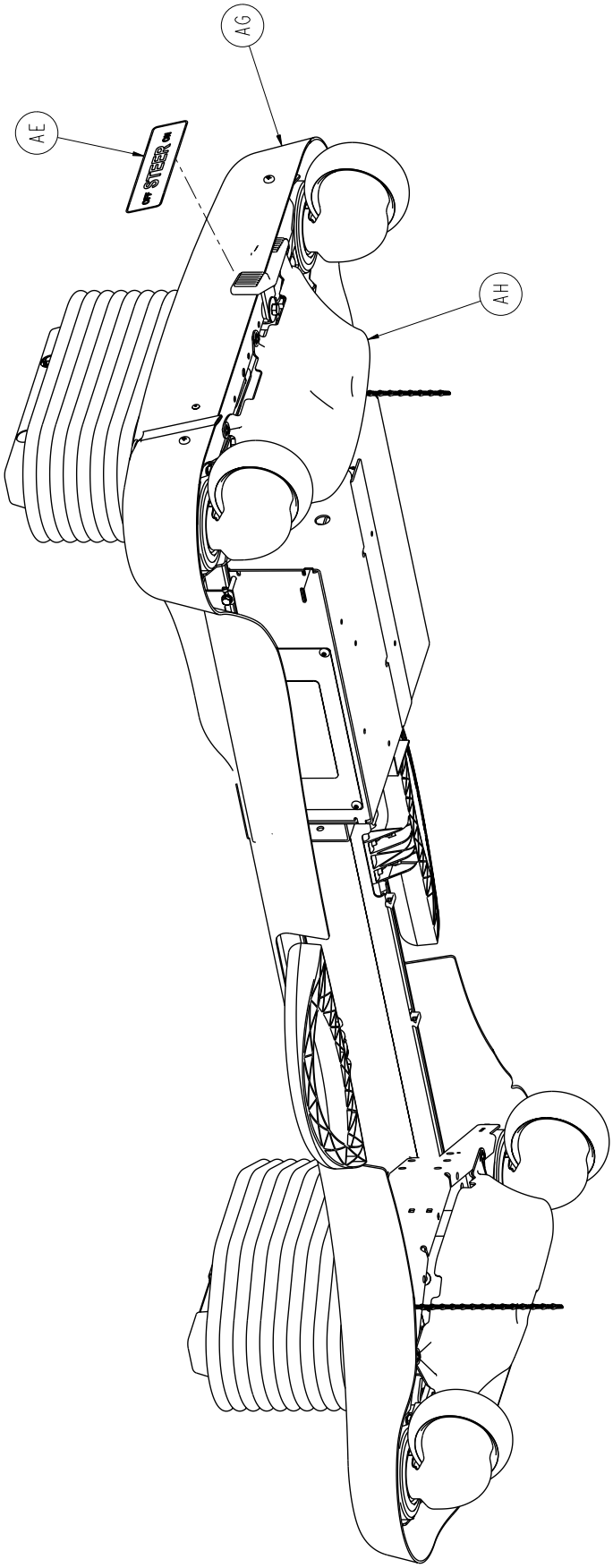

Return To Table of Contents

Base Assembly, Battery Backup, Common Components - 3006-200-006 (Reference Only)

Item	Part No.	Part Name	Qty.
A	0003-349-000	Hex Head Cap Screw	1
B	0025-1991-000	Rivet	1
E	0030-052-000	Heyco Snap Bushing	2
F	0037-221-000	Hole Plug	1
G	3006-200-380	Steer Extension Spring	1
H	3006-200-378	Swivel Lock Return Spring, RH	1
J	0045-008-000	O-Ring	1
K	0052-305-000	Washer	1
L	2030-001-030	Epic+Base Power Assembly	1
P	3000-200-337	Pushfit Ball Plunger	1
R	3006-200-339	Steer/Swivel Lever Bushing	1
T	3000-200-341	Steer Pedal Bushing	1
U	0011-611-000	Washer	1
V	3000-200-348	Wide, Special Washer	1
W	3000-200-349	Narrow, Special Washer	1
AA	3001-200-342	Steer Lock Cable	1
AB	3006-200-381	Steer/Swivel Lever	1
AC	2030-200-001	Steer Pedal Assembly	1
AD	3002-031-113	Umbilical Cable Isolation Bracket	1
AE	3006-090-013	Steer Lock Label	1
AF	3006-200-004	Zoom®/Battery Backup Base Standard Components	1
AG	3006-201-005	Hood Shroud	1
AH	3001-200-022	Bottom Cover Assembly	1
AJ	0037-230-000	Hole Plug	2
AK	0059-738-000	Dome Plug	1

Return To Table of Contents

Base Assembly, Zoom® Option

For Reference Only: 3006-200-005

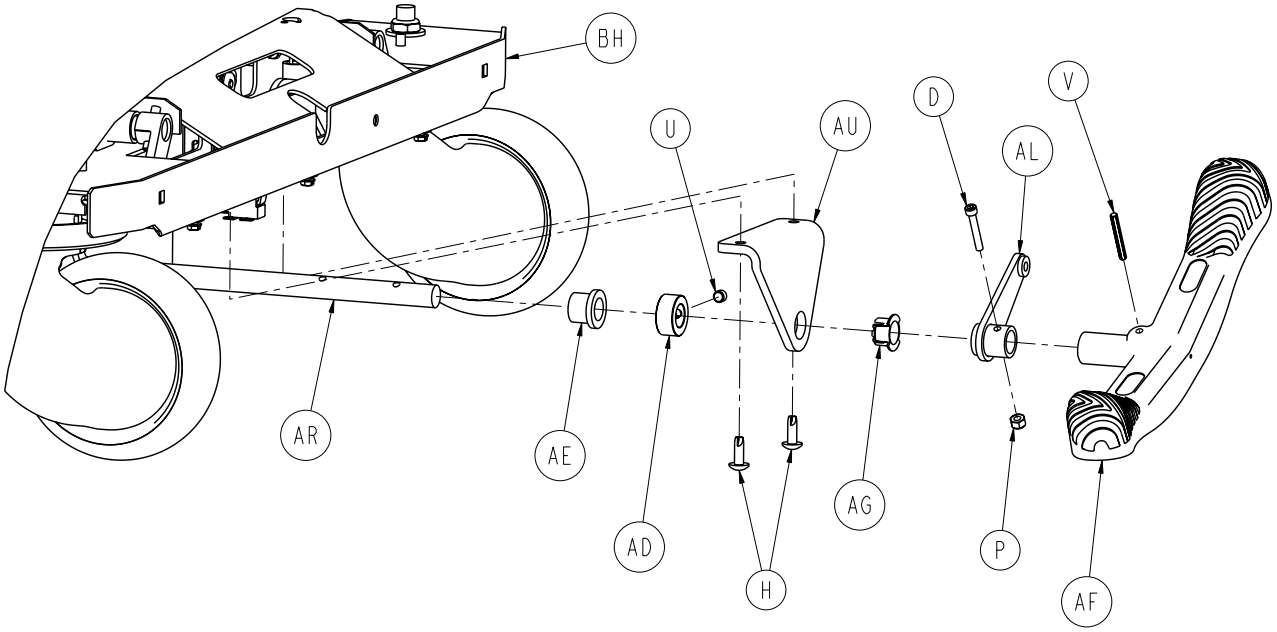

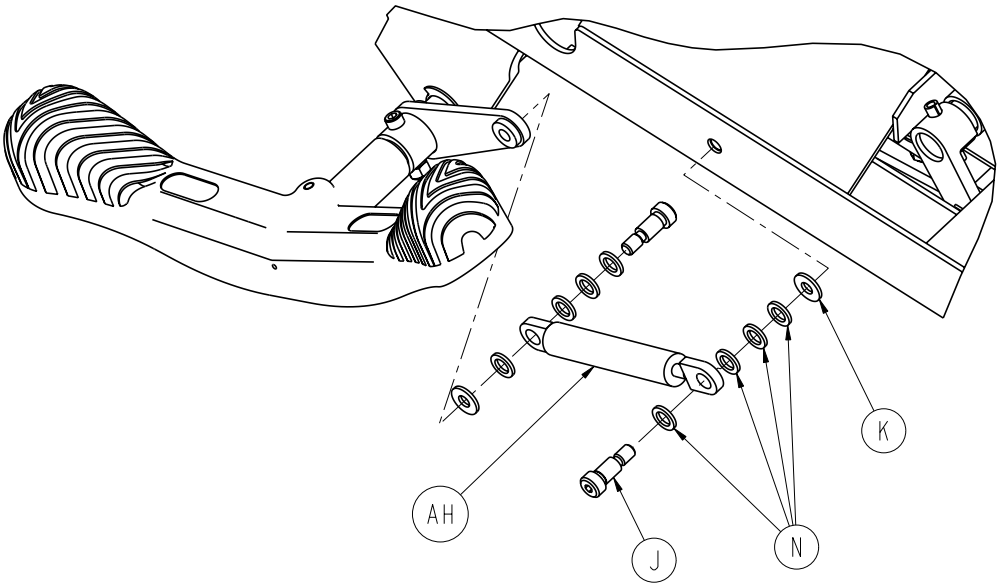

Return To Table of Contents

Base Assembly, Zoom® Option

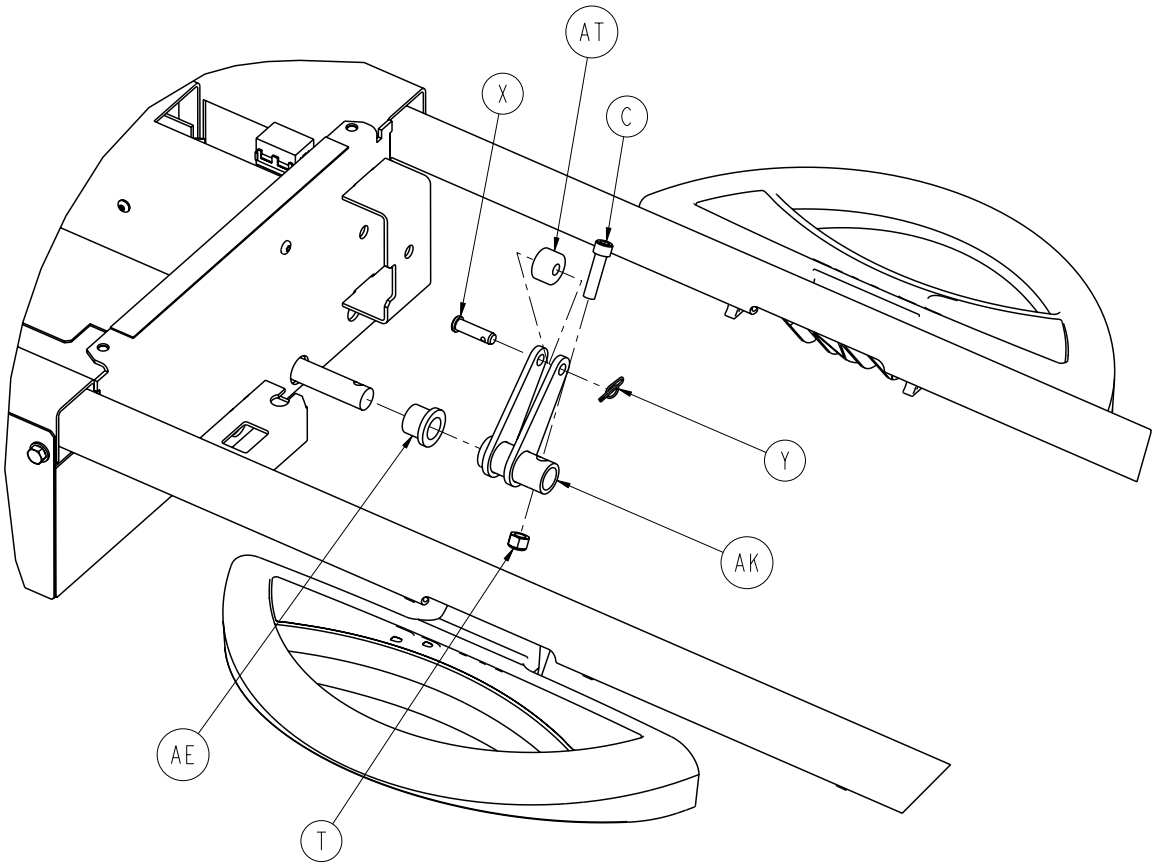

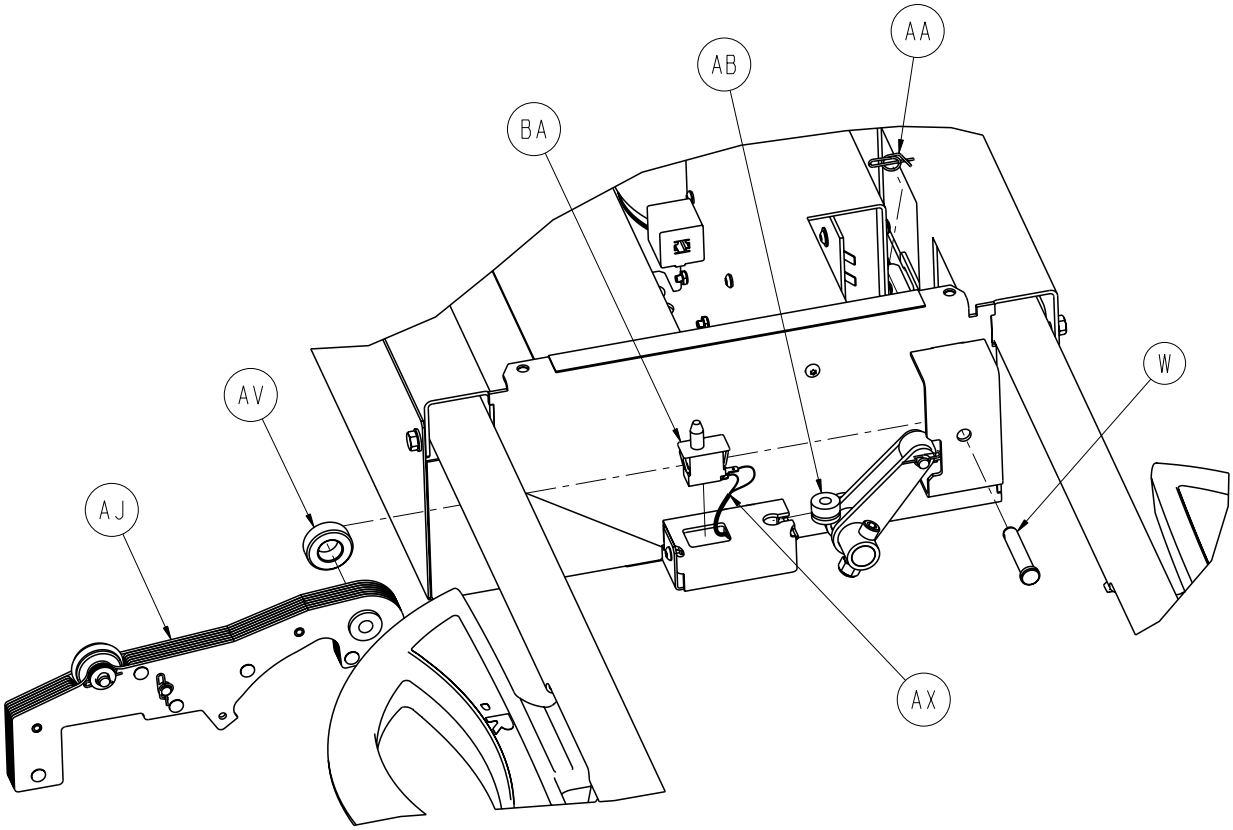

Return To Table of Contents

Base Assembly, Zoom® Option

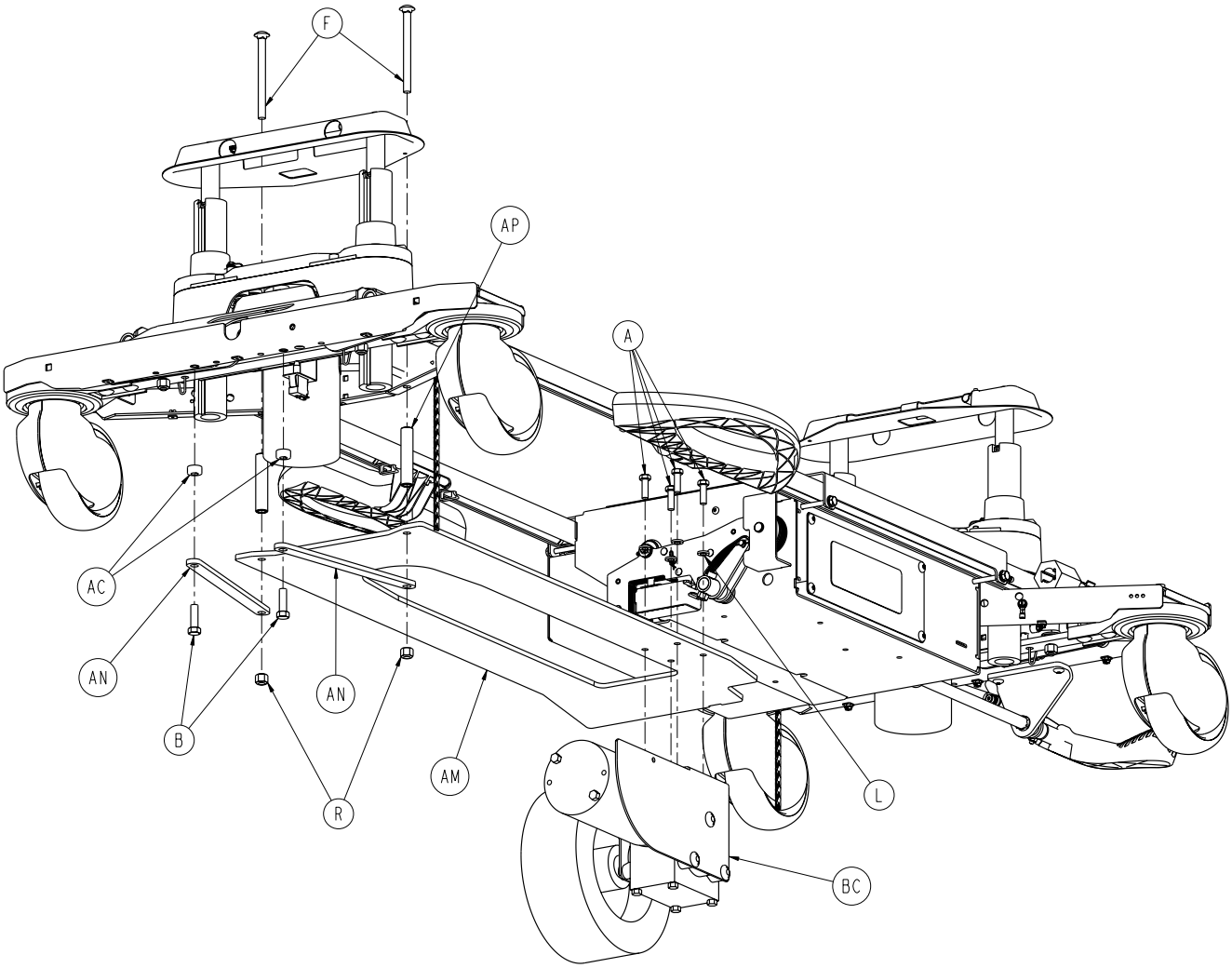

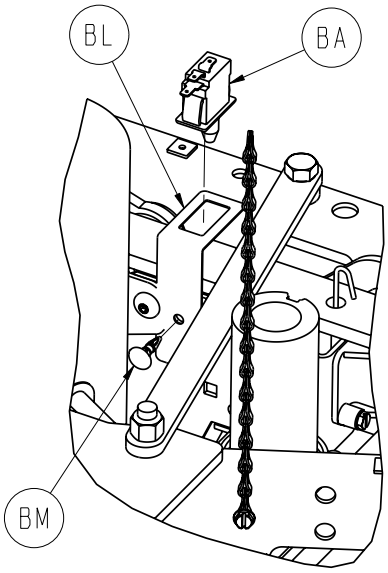

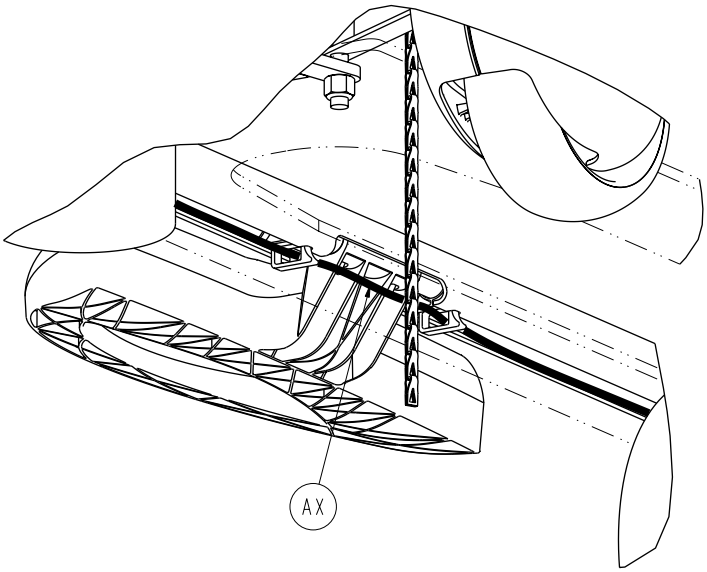

Return To Table of Contents

Base Assembly, Zoom® Option

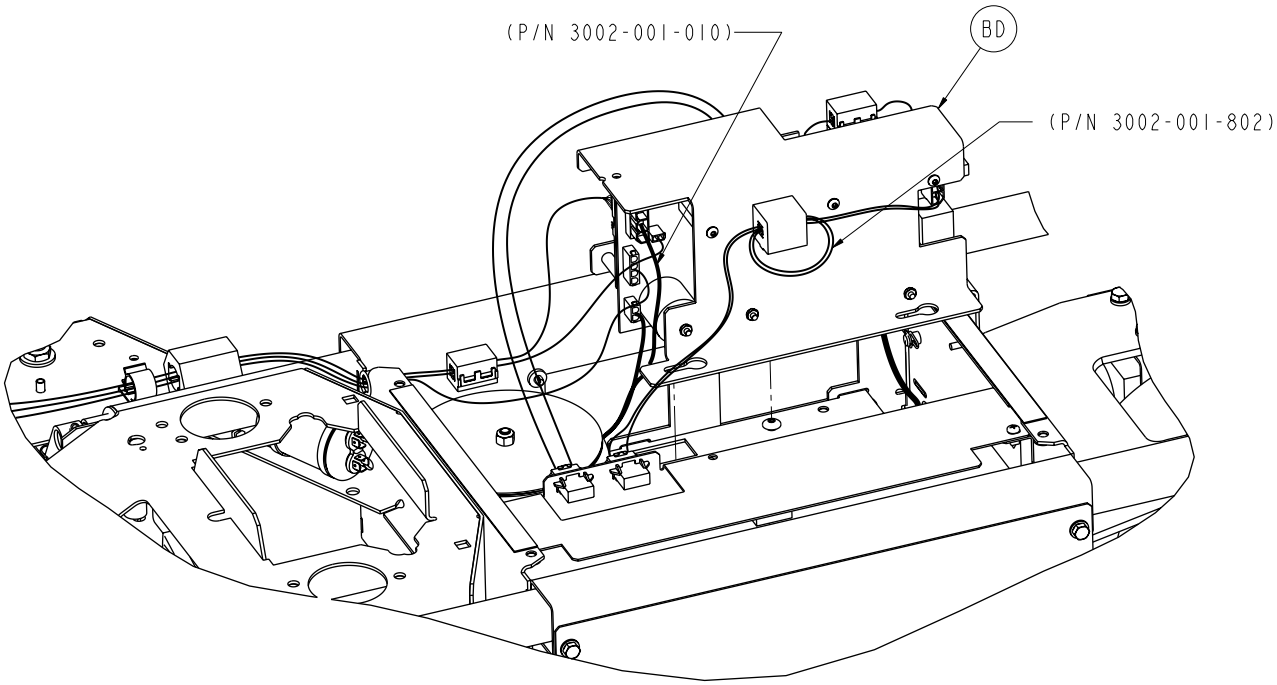

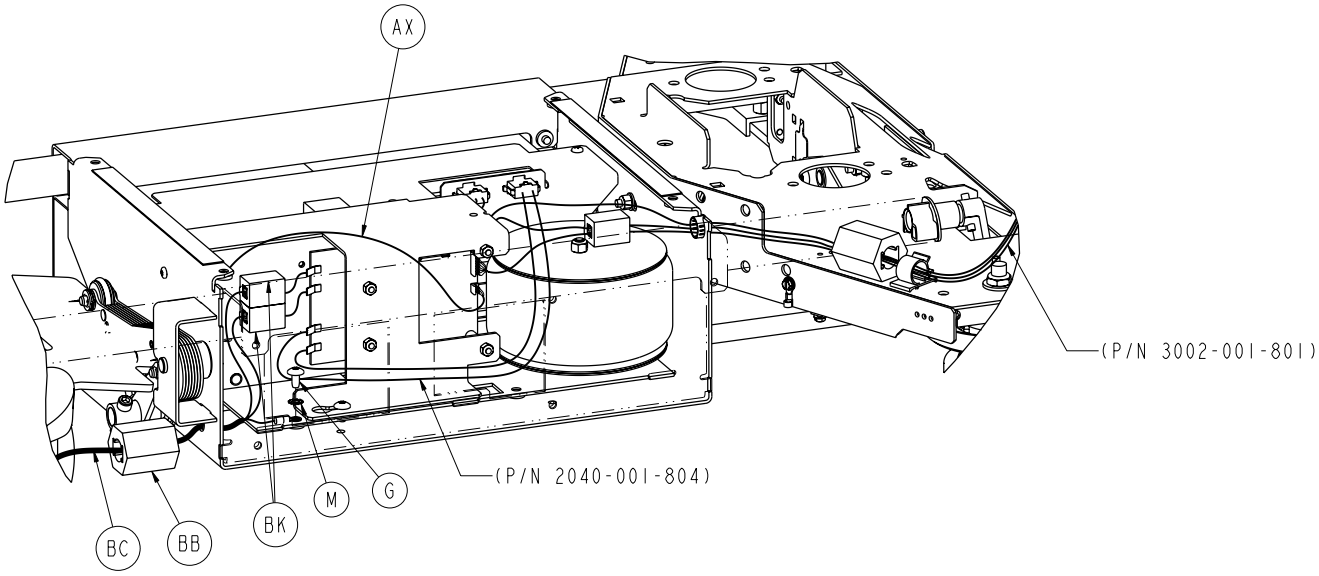

Return To Table of Contents

Base Assembly, Zoom® Option

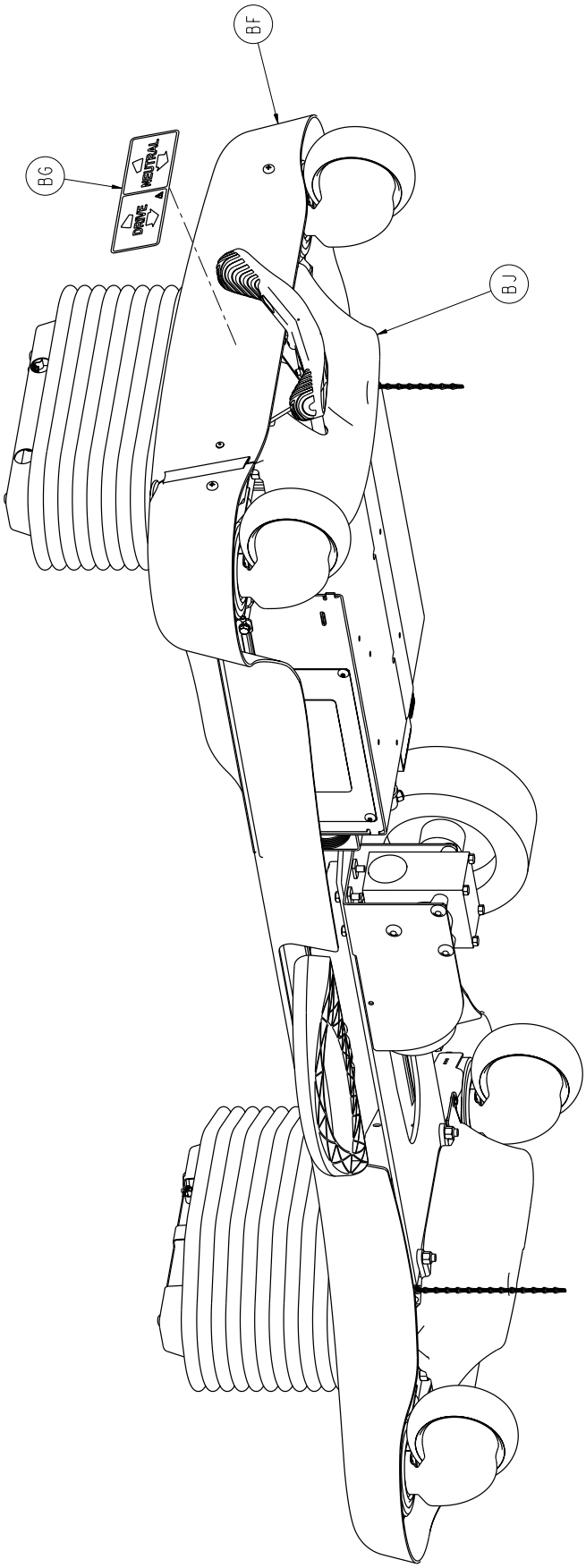

Return To Table of Contents

Base Assembly, Zoom®, Common Components - 3006-200-005 (Reference Only)

Item	Part No.	Part Name	Qty.
A	0003-085-000	Hex Head Cap Screw	4
B	0003-120-000	Hex Head Cap Screw	2
C	0004-039-000	Socket Head Cap Screw, Black	1
D	0004-160-000	Socket Head Cap Screw	1
E	0004-307-000	Socket Button Head Cap Screw	1
F	0005-031-000	Carriage Bolt	2
G	0007-052-000	Truss Head Torx	1
H	0007-063-000	Truss Head Screw	2
J	0008-049-000	Shoulder Head Screw Bolt	2
K	0011-063-000	Washer	2
L	0012-020-000	Lock Washer	4
M	0013-010-000	External Tooth Star Washer	1
N	0014-003-000	Plastic Washer	8
P	0016-003-000	Nylok Nut	1
R	0016-035-000	Nylok Nut	2
T	0016-036-000	Nylok Hex Nut	1
U	0021-022-000	Set Screw	1
V	0026-261-000	Groove Pin	1
W	0026-277-000	Clevis Pin	1
X	0026-297-000	Clevis Pin	1
Y	0027-019-000	Rue Ring Cotter	1
AA	0027-022-000	Rue Ring Cotter	1
AB	0030-040-000	E.A.R. Grommet	1
AC	0042-006-000	Collar	2
AD	0042-020-000	Collar	1
AE	0081-245-000	Bronze Bushing	2
AF	1210-201-153	Butterfly ‘V’ Pedal	1
AG	1210-201-251	Celcon Insert	1
AH	1210-201-671	Damper	1
AJ	2040-001-012	Drive Wheel Lift Lever Assembly	1
AK	2040-001-051	Pedal Crank Weldment	1
AL	2040-001-053	Damper Crank Weldment	1
AM	2040-001-060	Leaf Spring	1
AN	2040-001-061	Tie Down Strap	2
AP	2040-001-062	Uni-Pan Reinforcement Tube	2
AR	2040-001-082	Pedal Rod	1
AT	2040-001-083	Pedal Crank Roller	1
AU	2040-001-084	Pedal Rod Pivot Bracket	1
AV	2040-001-098	Lift Lever Spacer	1
AW	2040-001-103	Switch Bracket Cover	1
AX	2040-001-801	Base Switch Cable	1
BA	3000-300-058	Plunger Switch	2
BB	0059-192-000	Split Ferrite Core	1
BC	3002-001-014	Drive Train Assembly	1
BD	3002-001-030	Zoom® Base Power Assembly	1
BF	3006-001-018	Hood Assembly	1
BG	3006-001-100	Drive Wheel Position Label	1
BH	3006-200-004	Base Standard Components - Zoom®/Battery Backup	1
BJ	2040-001-017	Bottom Cover Assembly, Head End	1
BL	3000-200-343	Brake Switch Bracket	1
BM	3000-300-115	Standoff	1
BN	3000-300-113	8” Cable Tie	4

Return To Table of Contents

Lift Assembly (Head and Foot End)

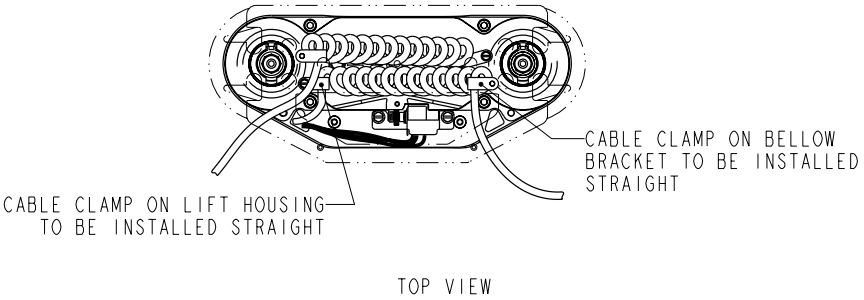

HEAD END: 3006-301-201

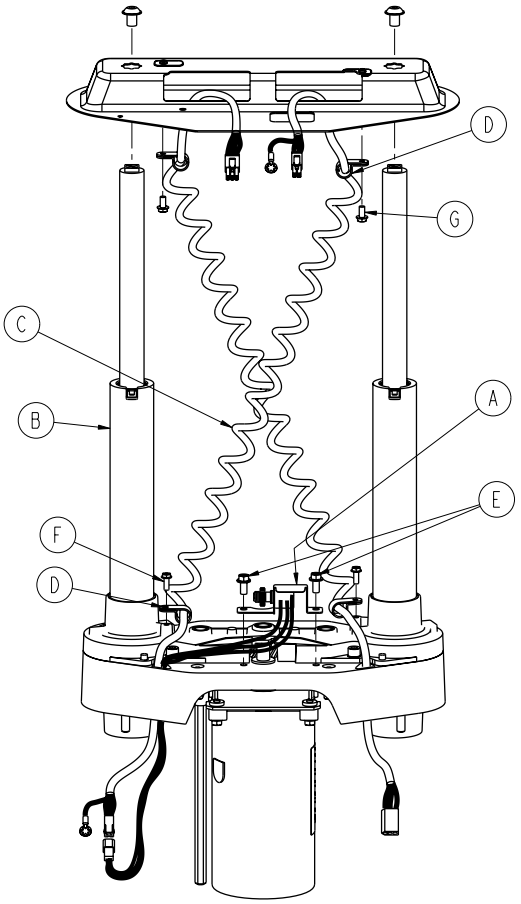

FOOT END: 3006-301-251

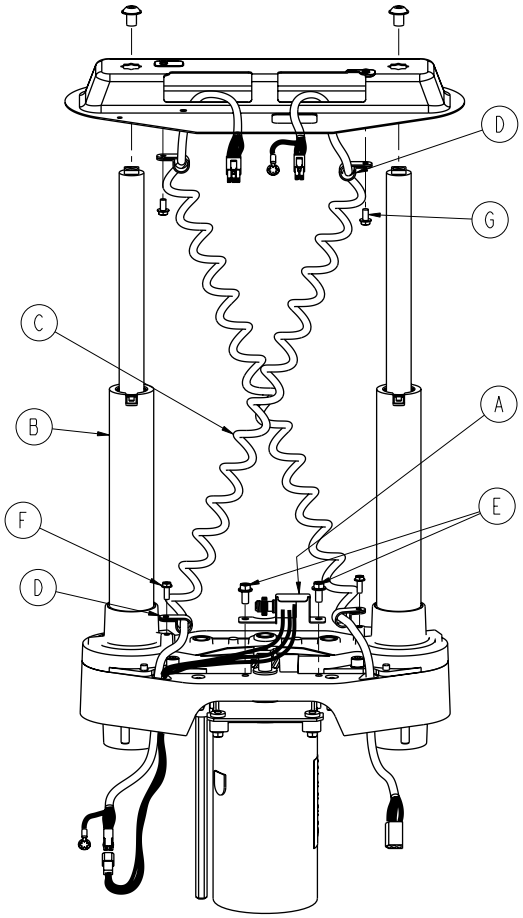

Item	Part No.	Part Name	Qty.
A	3006-200-240	HE Potentiometer Assembly	1
	3001-200-230	FE Potentiometer Assembly	1
B	3006-200-275	Common Lift Assembly	1
C	3006-200-815	Sensor Coil Cord	1
D	0034-022-000	Cable Clamp, Head End	2
	0034-021-000	Cable Clamp, Foot End	2
E	0003-121-000	Hex Washer Head Screw	2
F	0003-128-000	Hex Washer Head Screw	1
J	0023-164-000	Hex Washer Head Screw	1

Return To Table of Contents

For Reference Only: 3000-200-276

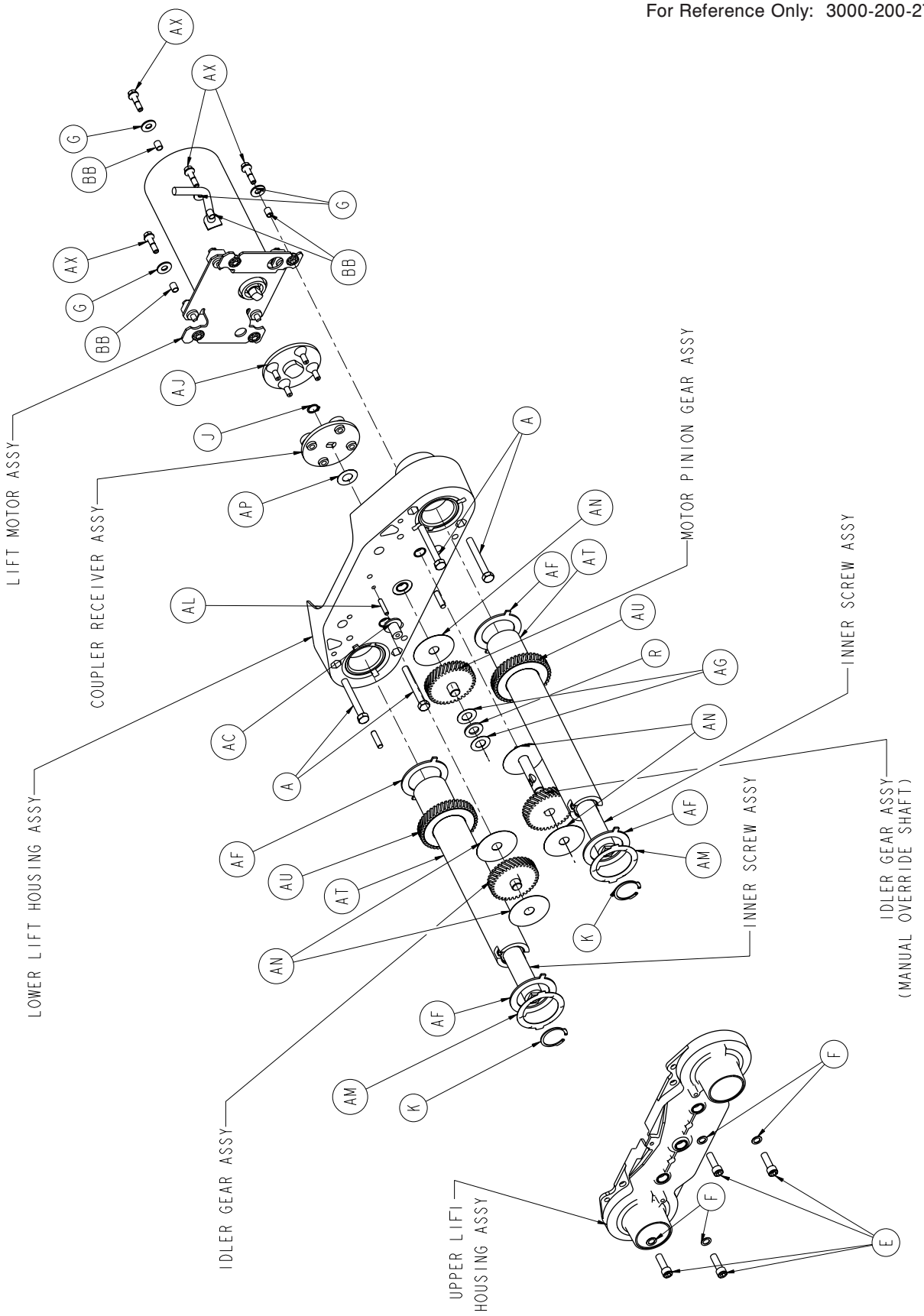

Return To Table of Contents

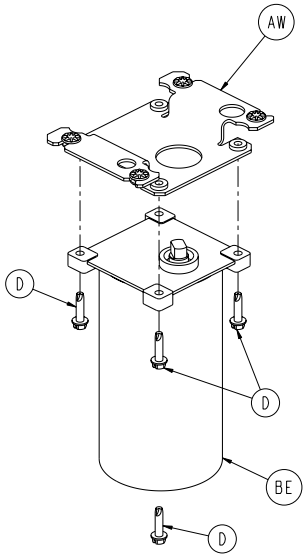

LIFT MOTOR ASSY

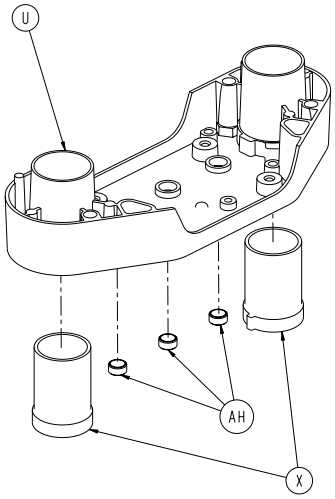

LOWER LIFT HOUSING ASSY

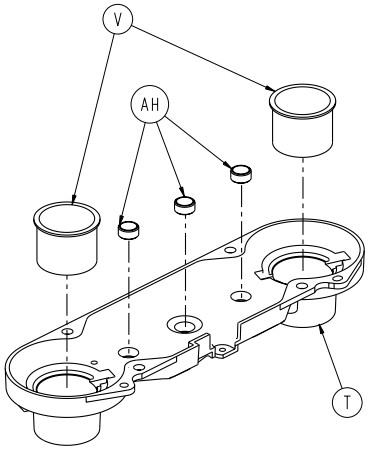

UPPER LIFT HOUSING ASSY

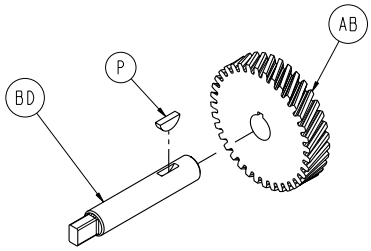

IDLER GEAR ASSY
(MANUAL OVERRIDE SHAFT)

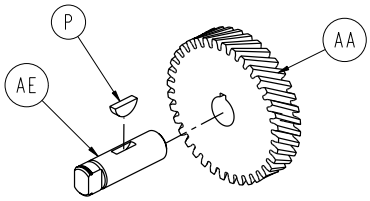

MOTOR PINION GEAR ASSY

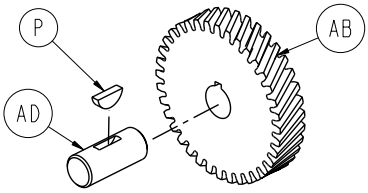

IDLER GEAR ASSY

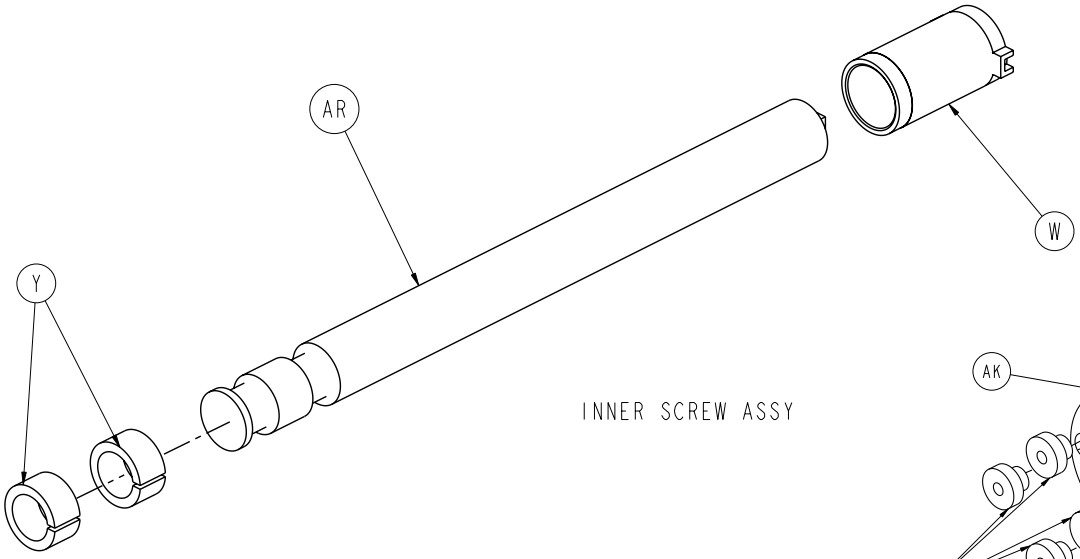

INNER SCREW ASSY

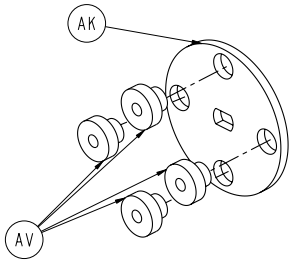

COUPLER RECEIVER ASSY

Return To Table of Contents

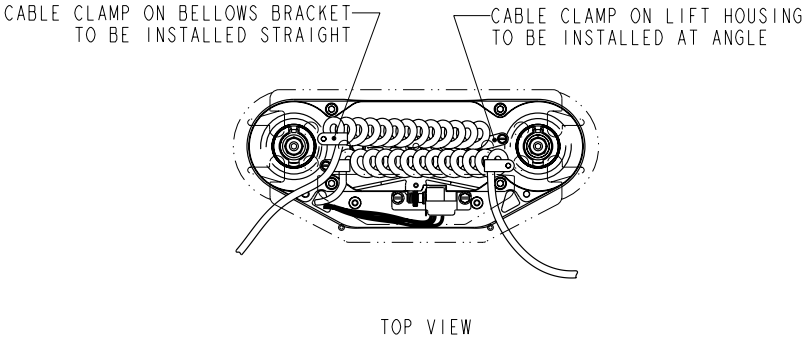

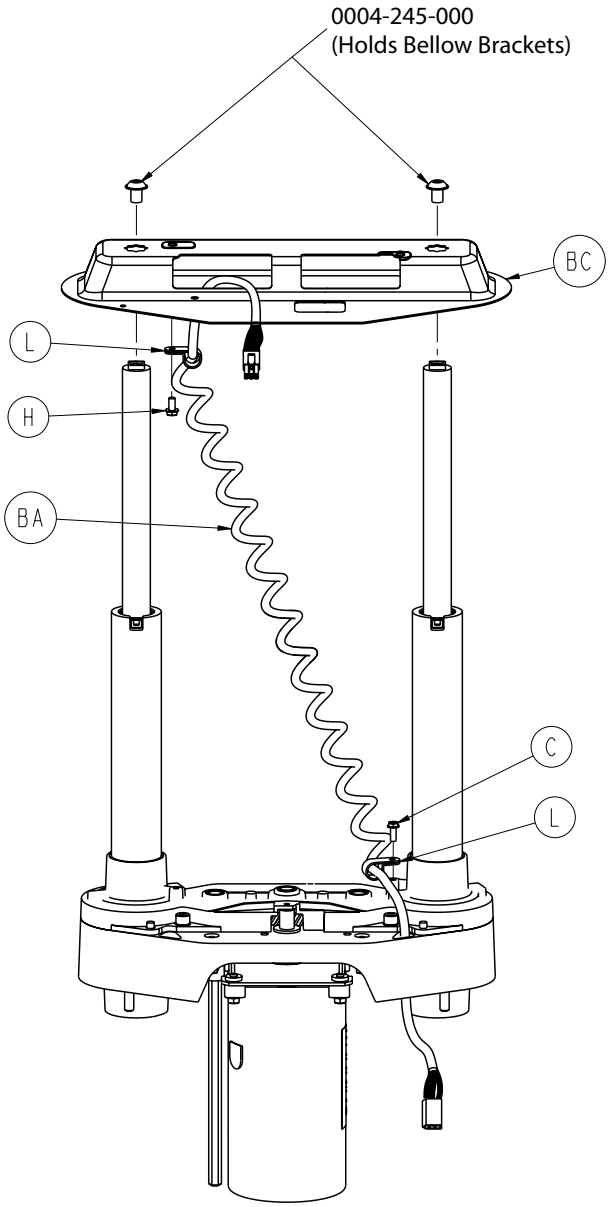

Return To Table of Contents

Lift Assembly Common Components - 3006-200-275 (Reference Only)

Item	Part No.	Part Name	Qty.
A	0003-082-000	Hex Head Cap Screw	4
C	0003-128-000	Hex Washer Head Screw	1
D	0003-331-000	Hex Washer Head Screw	4
E	0004-213-000	Socket Head Cap Screw	4
F	0011-308-000	Serrated Washer	4
G	0011-408-000	Flat Washer	4
H	0023-164-000	Hex Washer Head Screw	1
J	0028-097-000	Retaining Ring	1
K	0028-121-000	Retaining Ring	2
L	0034-022-000	Cable Clamp	2
N	0051-022-000	Syn-Tech Grease	4
P	0058-044-000	#404 Woodruff Key	3
R	0081-212-000	Needle Roller Bearing	1
T	3000-200-201	Upper Lift Housing	1
U	3000-200-202	Lower Lift Housing	1
V	3000-200-204	Upper Housing Sleeve	2
W	3000-200-205	Upper Stage Nut	2
X	3000-200-207	Lower Stage Nut	2
Y	3000-200-208	Glide Bushing	4
AA	3000-200-209	Motor Pinion	1
AB	3000-200-210	Idler Gear	2
AC	3000-200-216	Potentiometer Drive Gear	1
AD	3000-200-218	Lift Idler Shaft	1
AE	3000-000-220	Input Pinion Shaft	1
AF	3000-200-223	Output Gear Thrust Washer	4
AG	3000-200-224	Input Gear Thrust Washer	2
AH	3000-200-226	Pinion Shaft Bushing	6
AJ	3000-200-233	Lift Motor Coupling	1
AK	3000-200-234	Coupler Receiver	1
AL	3000-200-239	Drive Gear Shaft, Pot	1
AM	3000-200-241	Wave Spring Washer	2
AN	3000-200-245	Gear Washer	5
AP	3000-200-246	Nylon Washer	1
AR	3000-200-249	Inner Screw	2
AT	3000-200-251	Tube Screw	2
AU	3000-200-252	Output Gear	2
AV	3000-300-455	Isolation Bushing	4
AW	3001-200-214	Isolation Plate Assembly	1
AX	3001-200-228	Mounting Standoff	4
BA	3001-200-864	Power Coil Cable	1
BB	3001-300-019	Isolation Sleeve	4
BC	3002-200-052	Bellows Bracket	1
BD	3002-200-235	Manual Override Shaft, Idler	1
BE	3003-016-603	Lift Motor	1

Return To Table of Contents

Lift Motor Isolation Plate Assembly

For Reference Only: 3001-200-214

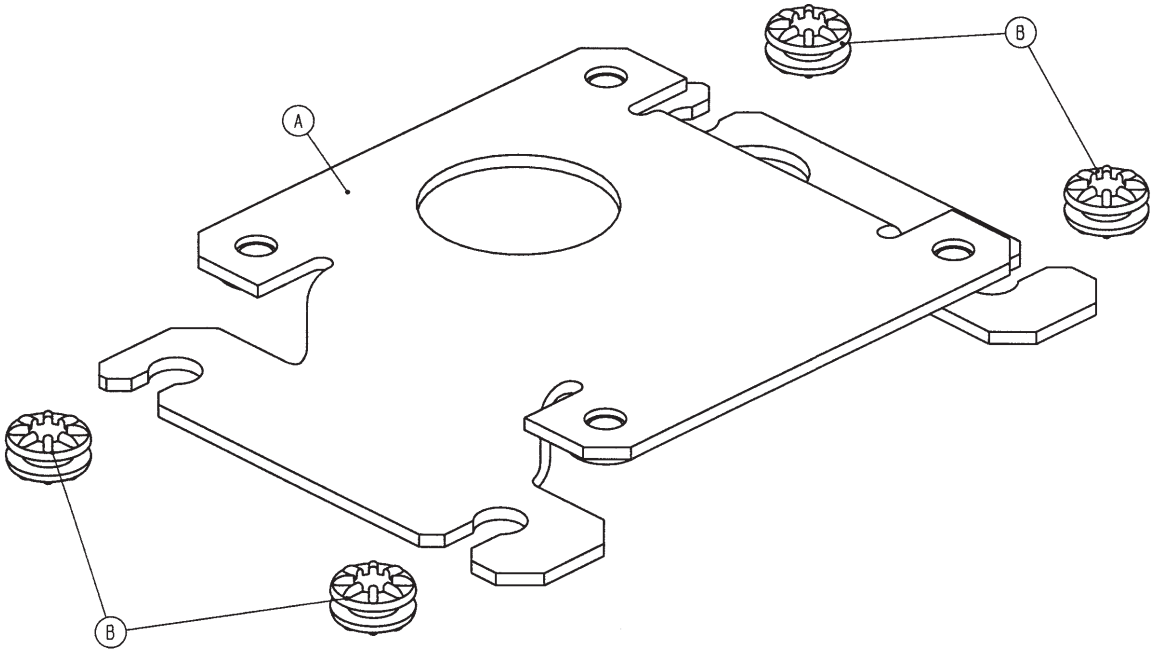

Item	Part No.	Part Name	Qty.
A	3001-200-213	Isolation Plate	1
B	3000-300-442	Grommet	4

Return To Table of Contents

Brake Shaft Assembly, Standard Bed

For Reference Only: 3006-200-340

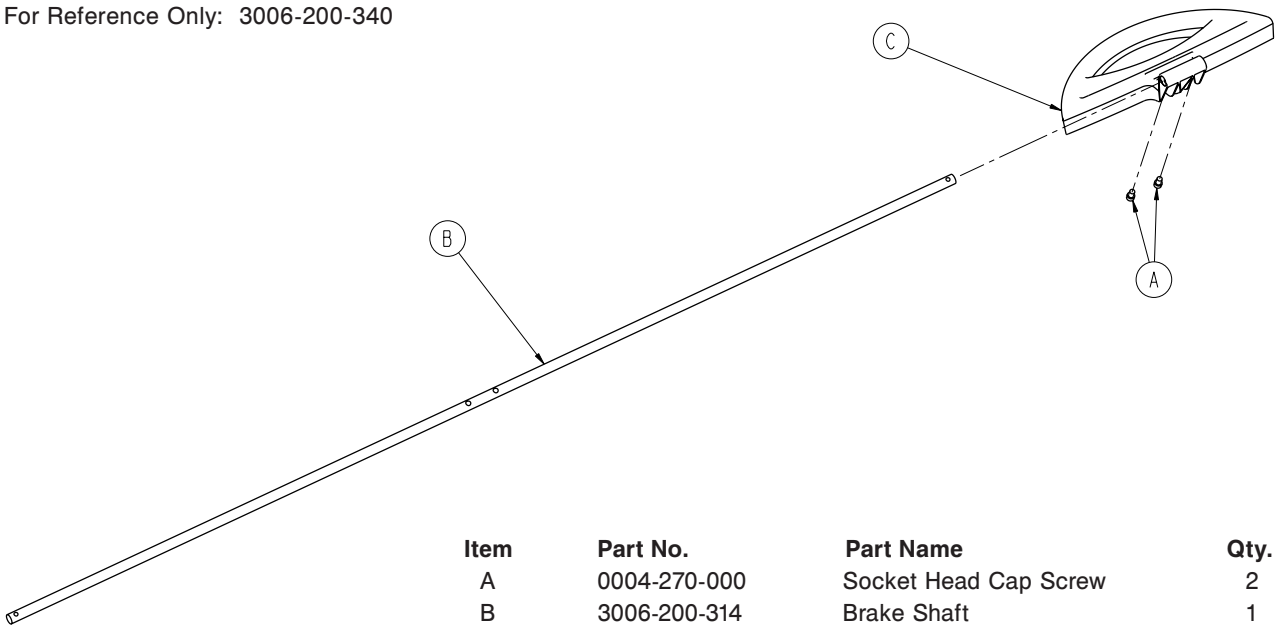

Item	Part No.	Part Name	Qty.
A	0004-270-000	Socket Head Cap Screw	2
B	3006-200-314	Brake Shaft	1
C	3006-200-325	Brake Pedal	1

Brake Shaft Assembly, Battery Back-up or Zoom® Option

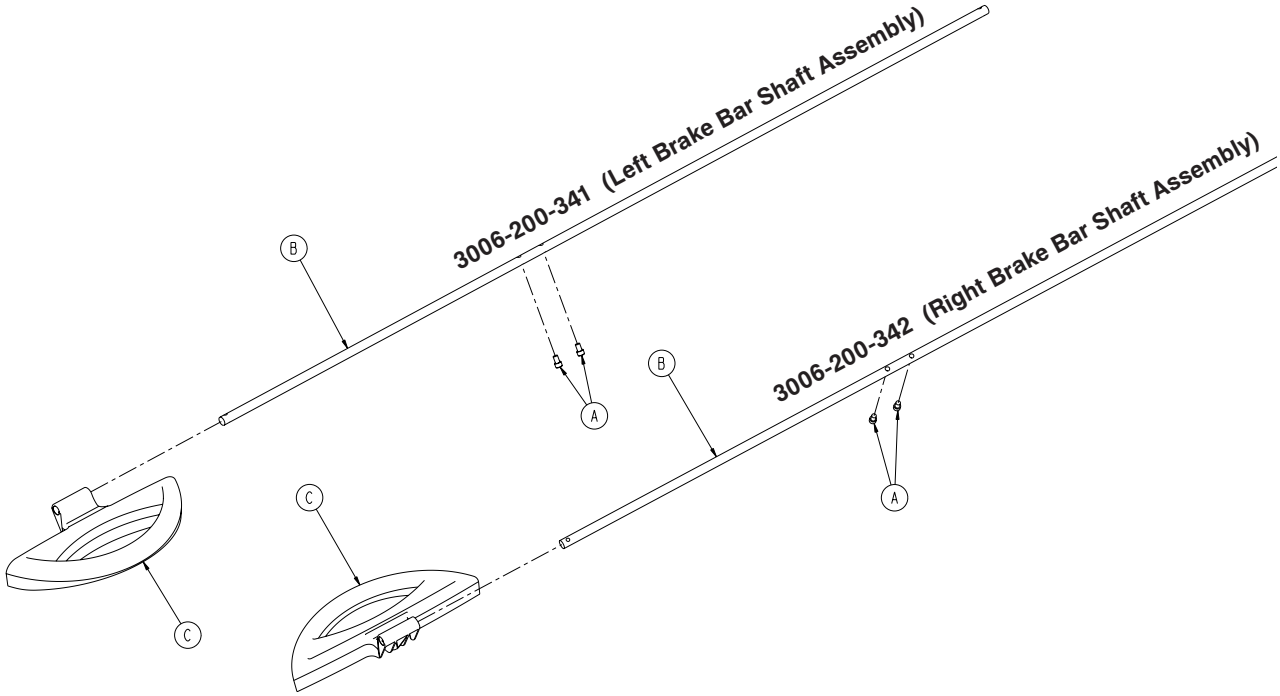

Item	Part No.	Part Name	Qty.
A	0004-270-000	Socket Head Cap Screw	2
B	3006-200-314	Brake Shaft	1
C	3006-200-325	Brake Pedal	1

Return To Table of Contents

Brake Crank Assembly

For Reference Only: 3006-200-330

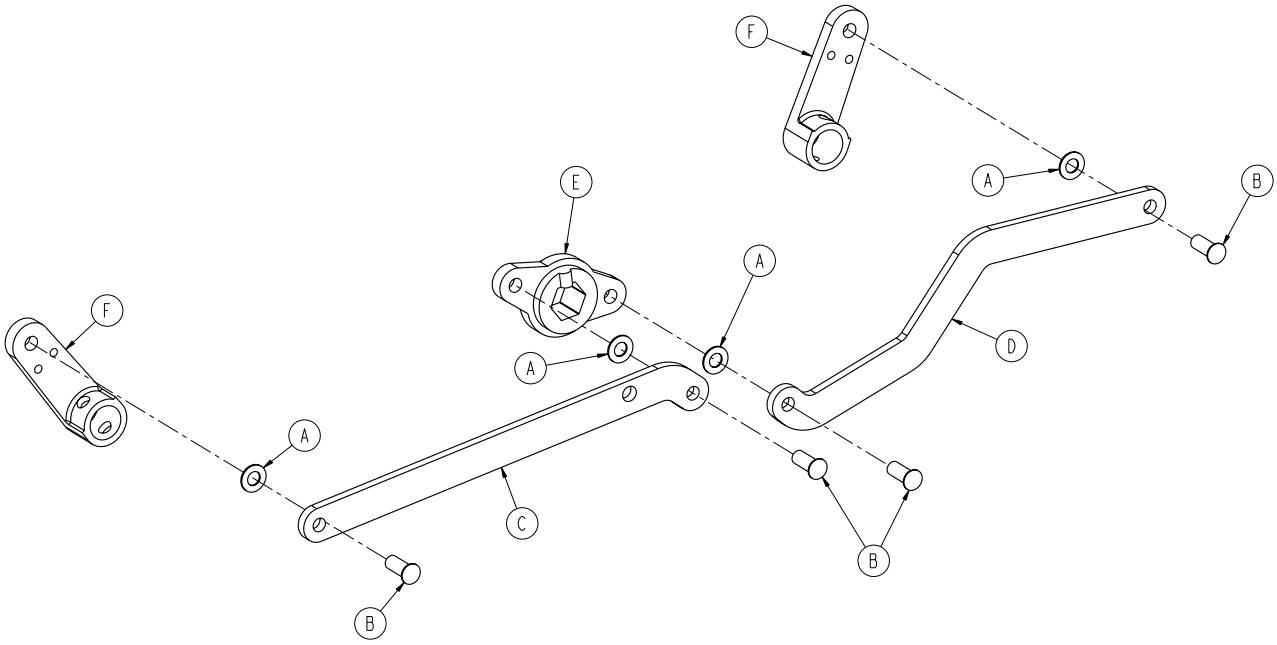

Item	Part No.	Part Name	Qty.
A	0014-004-000	Washer	4
B	0025-146-000	Rivet	4
C	3001-200-311	Brake Link	1
D	3001-200-312	Dog Leg Brake Link	1
E	3002-200-309	Brake Crank	1
F	3006-200-302	Brake Shaft Crank	2

Return To Table of Contents

Brake Bar Assembly

For Reference Only: 3006-200-335

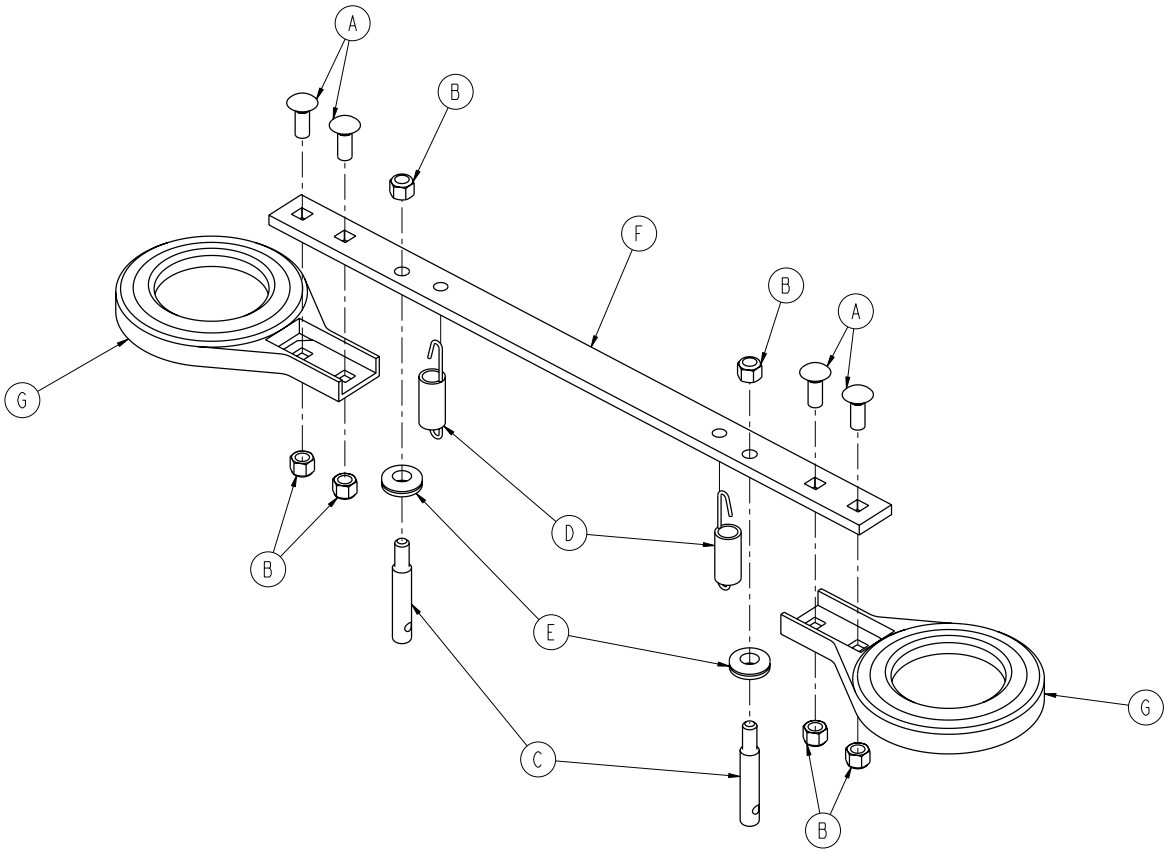

Item	Part No.	Part Name	Qty.
A	0005-018-000	Carriage Bolt	4
B	0016-035-000	Nylock Hex Nut	6
C	3000-200-318	Guide Pin	2
D	3000-200-310	Brake Bar Return Spring	2
E	3003-200-324	Brake Bar Bumper	2
F	3000-200-323	Brake Bar	1
G	3006-200-327	Toothed Brake Ring	2

Return To Table of Contents

Swivel Lock Caster Assembly - 3006-200-060

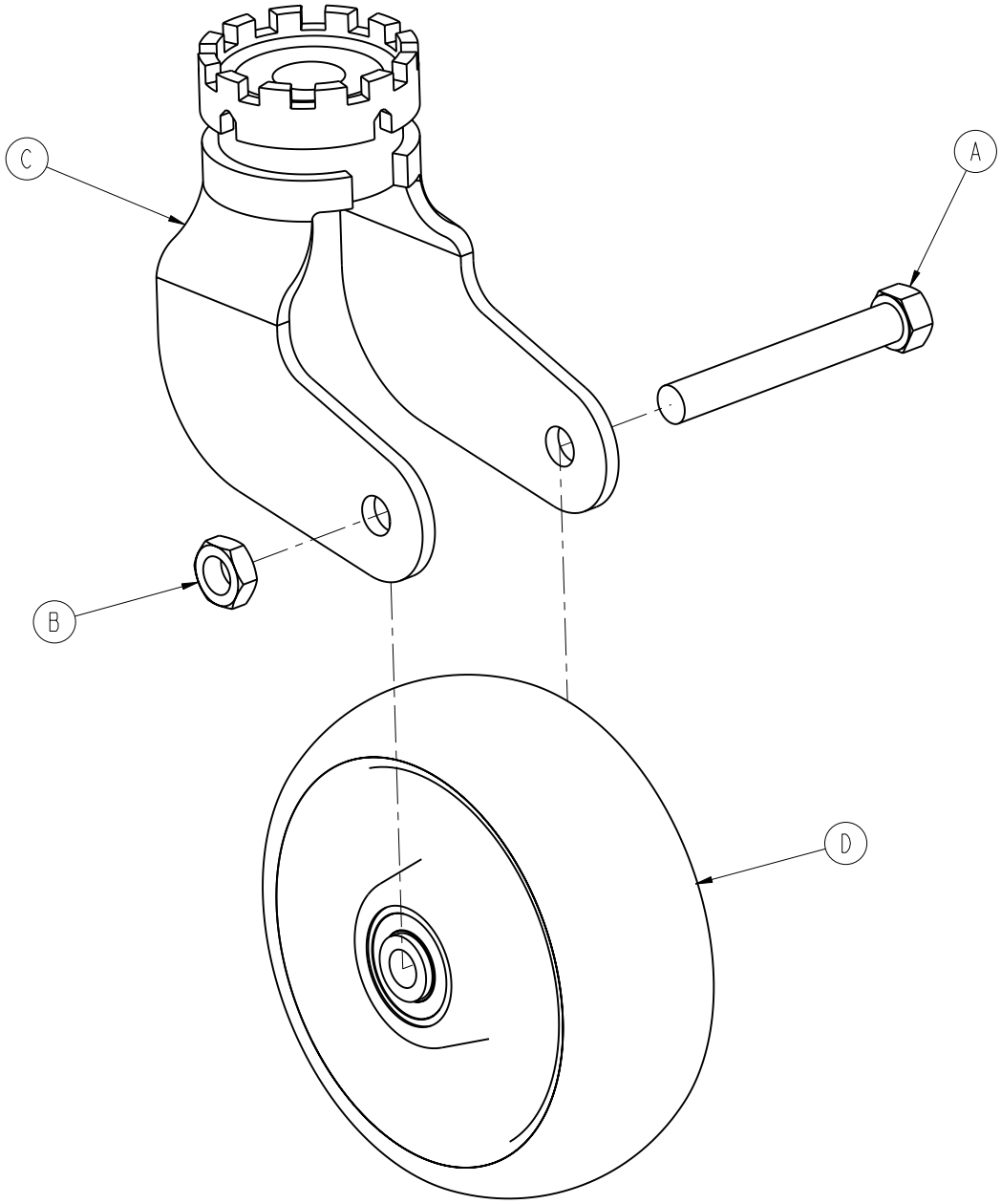

Item	Part No.	Part Name	Qty.
A	0003-342-000	Hex Head Cap Screw	1
B	0016-060-000	Lock Nut	1
C	3006-200-059	Caster Horn with Bearing and Swivel	1
A	5000-002-010	Molded Wheel Assembly	1

Return To Table of Contents

Steer Swivel Caster Assembly, White - 3006-200-065

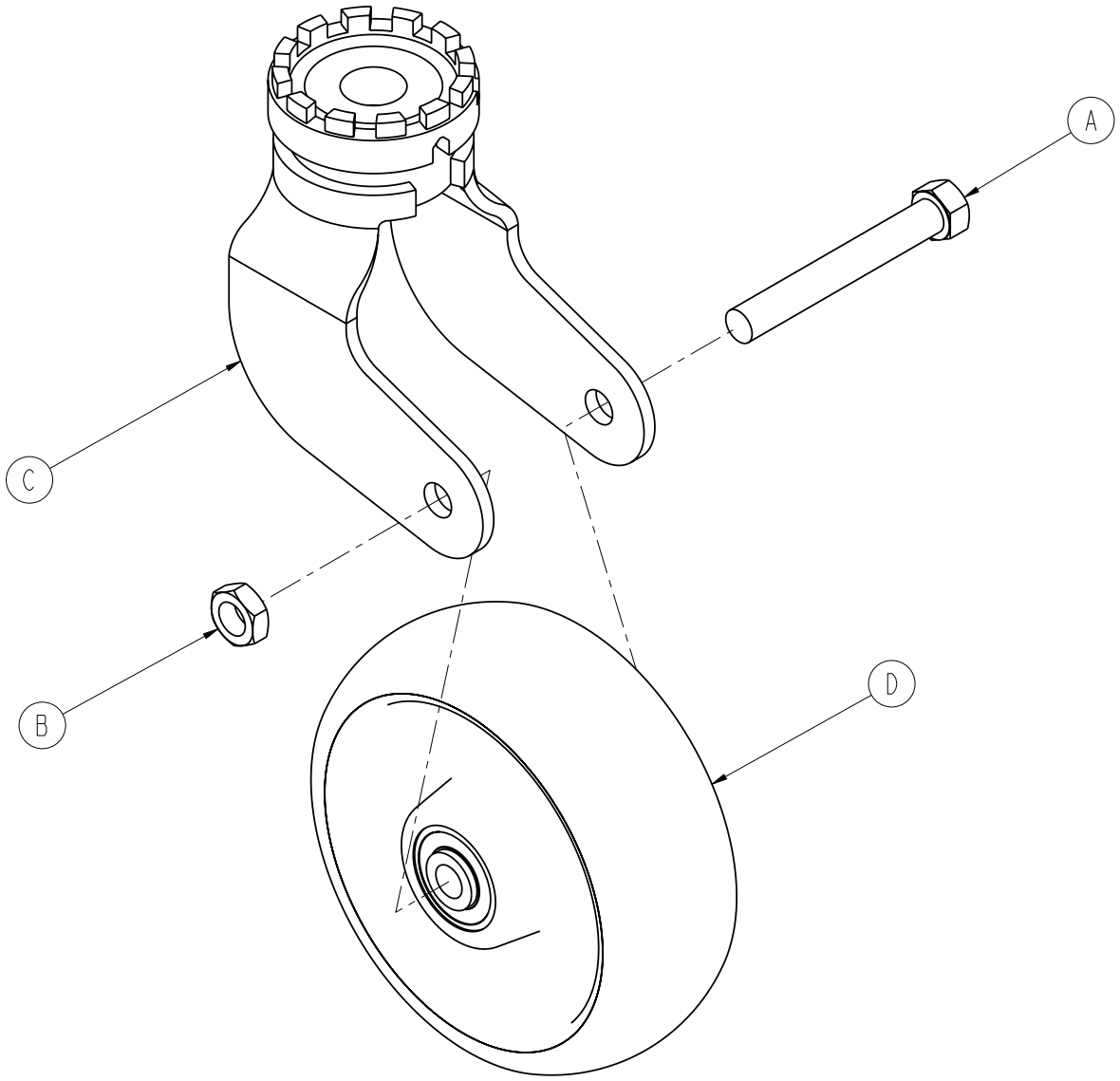

Item	Part No.	Part Name	Qty.
A	0003-342-000	Hex Head Cap Screw	1
B	0016-060-000	Lock Nut	1
C	3006-200-063	Steer Caster Horn with Bearing and Steer Swivel, White	1
D	5000-002-010	Molded Wheel Assembly	1

Return To Table of Contents

6” Molded Wheel Assembly - 5000-002-010

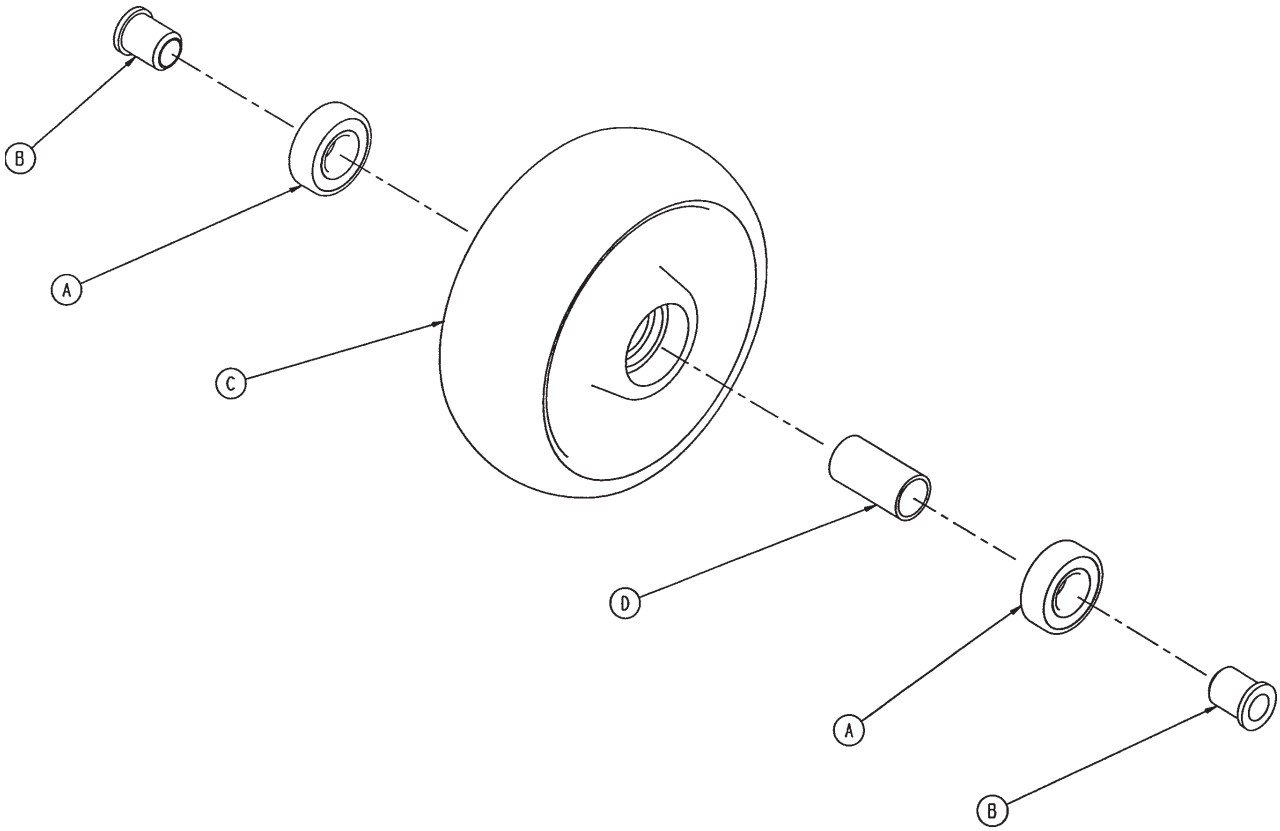

Item	Part No.	Part Name	Qty.
A	0081-226-000	Bearing	2
B	0715-001-255	Wheel Bushing	2
C	5000-002-020	Molded Wheel	1
D	6060-002-046	Bearing Spacer	1

Return To Table of Contents

Bottom Cover

3001-200-022

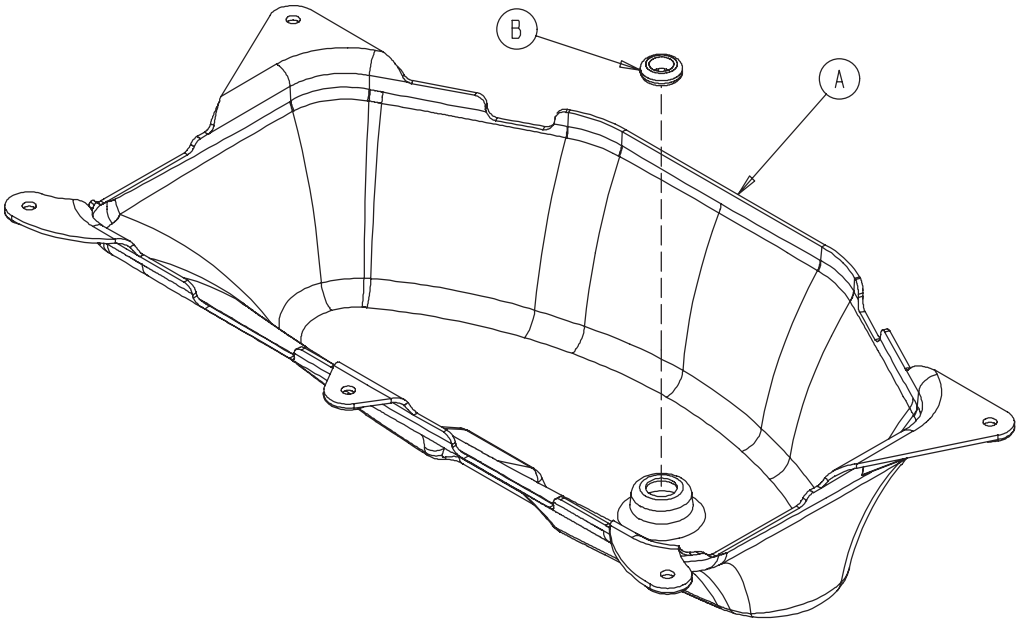

Item	Part No.	Part Name	Qty.
A	3002-001-100	Bottom Cover	1
B	3000-000-039	Grommet	1

Zoom® Option Head End Bottom Cover

2040-001-017

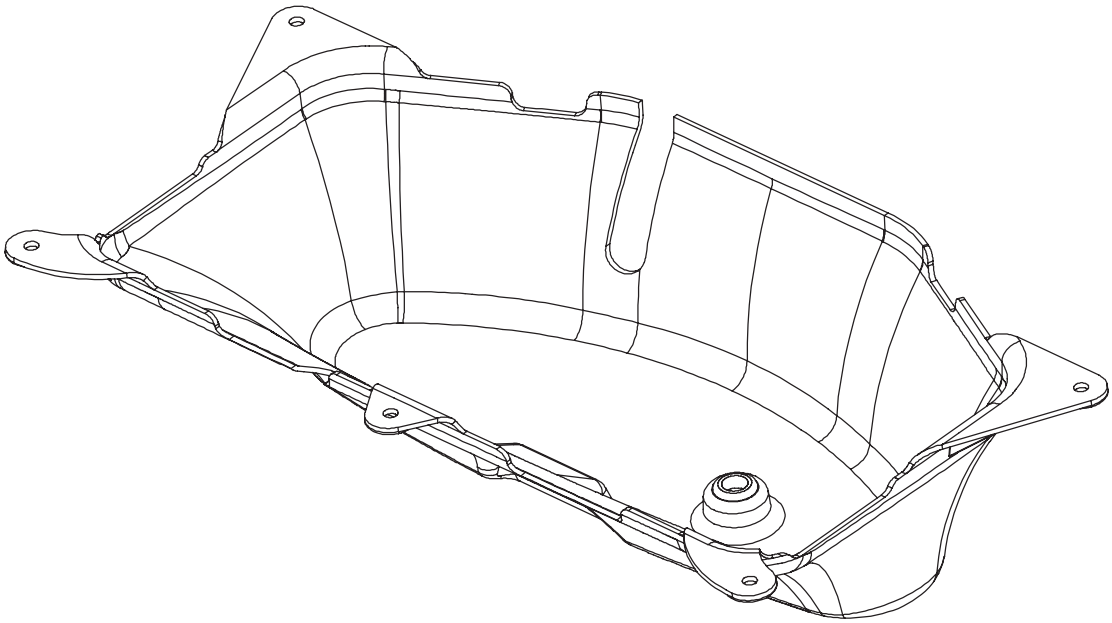

Return To Table of Contents

Battery Backup Option, Power Assembly

2030-001-030

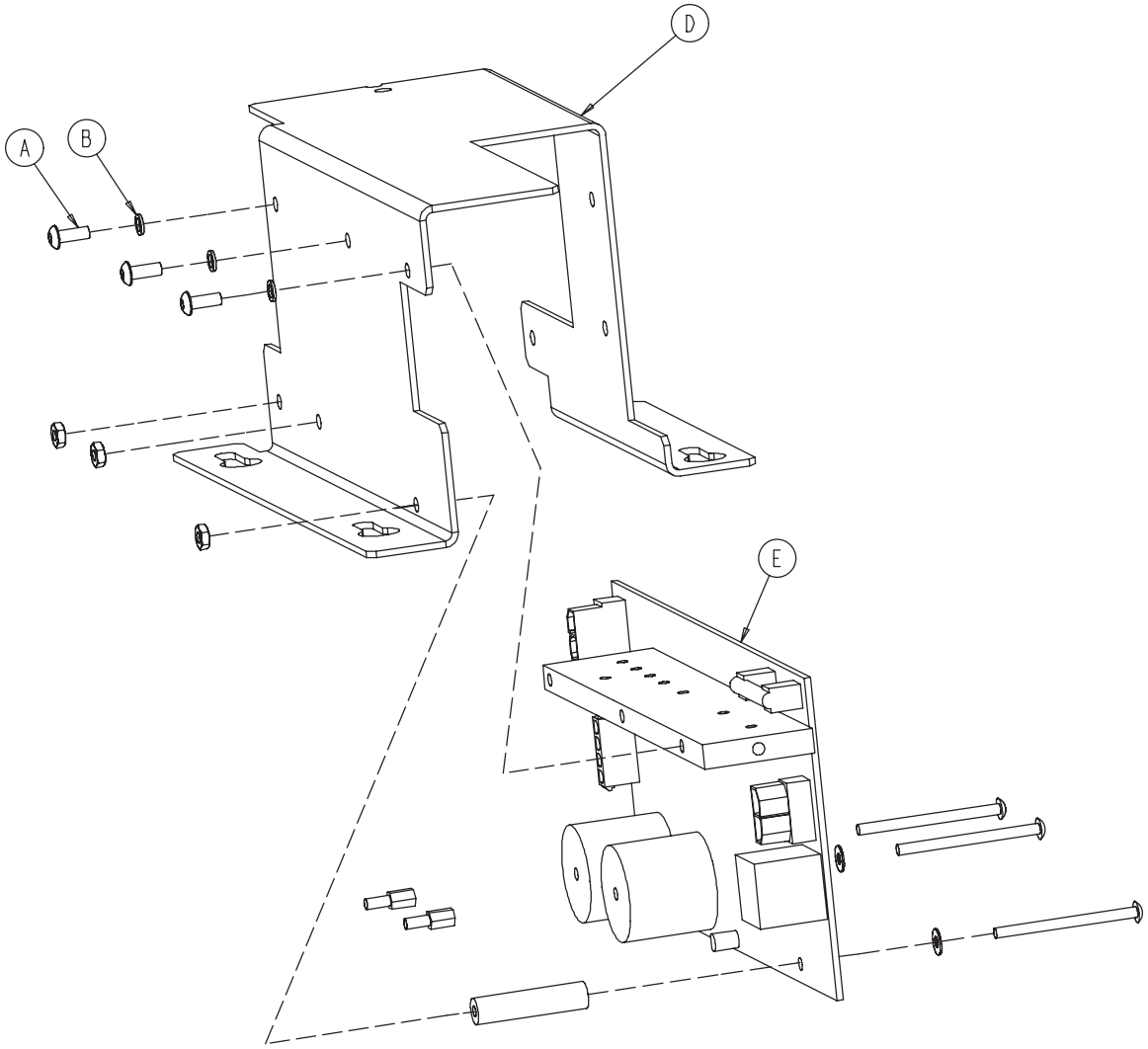

Item	Part No.	Part Name	Qty.
A	0004-263-000	Button Head Cap Screw	3
B	0012-006-000	Helical Lock Washer	3
D	3002-001-017	Charger/Inverter Heat Bracket	1
E	3002-001-930	Charger/Inverter Board	1

Return To Table of Contents

Battery Kit Part Number 2040-700-013
(Includes Two Batteries)

For Reference Only: 3002-001-015

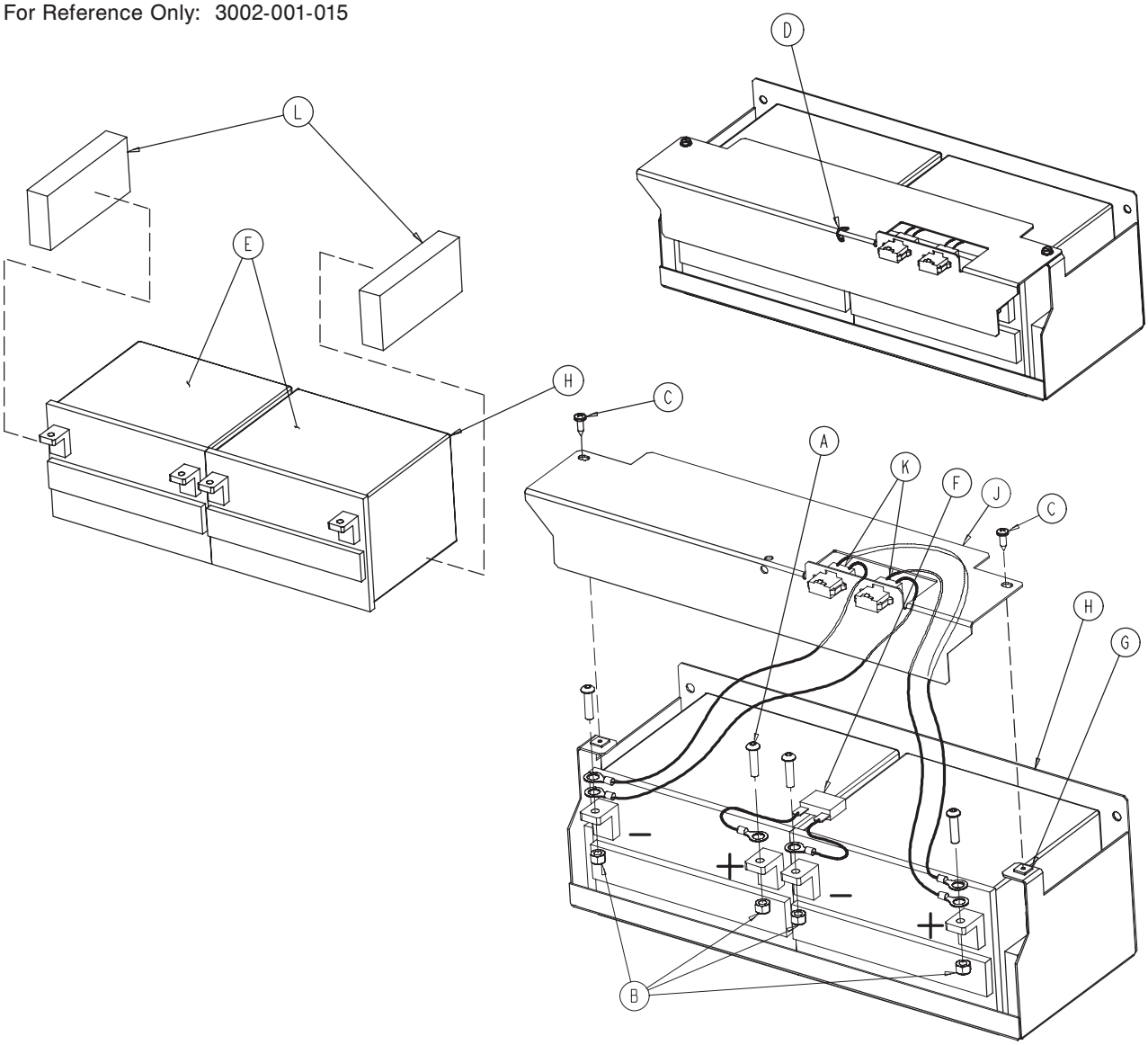

Item	Part No.	Part Name	Qty.
A	0004-046-000	But. Head Cap Screw	4
B	0016-028-000	Nylock Nut	4
C	0023-256-000	Pan Head Screw	2
D	0038-151-000	Cable Tie	1
E	2040-001-070	Battery	2
F	2040-001-802	Battery Jumper Cable	1
G	3000-300-002	Push Nut	2
H	3002-001-069	Battery Tray	1
J	3002-001-091	Terminal Guard	1
K	3002-001-803	Battery Harness Cable	2
L	3002-101-043	Foam Spacer	2

Return To Table of Contents

Zoom® Option, Drive Train Assembly

3002-001-014

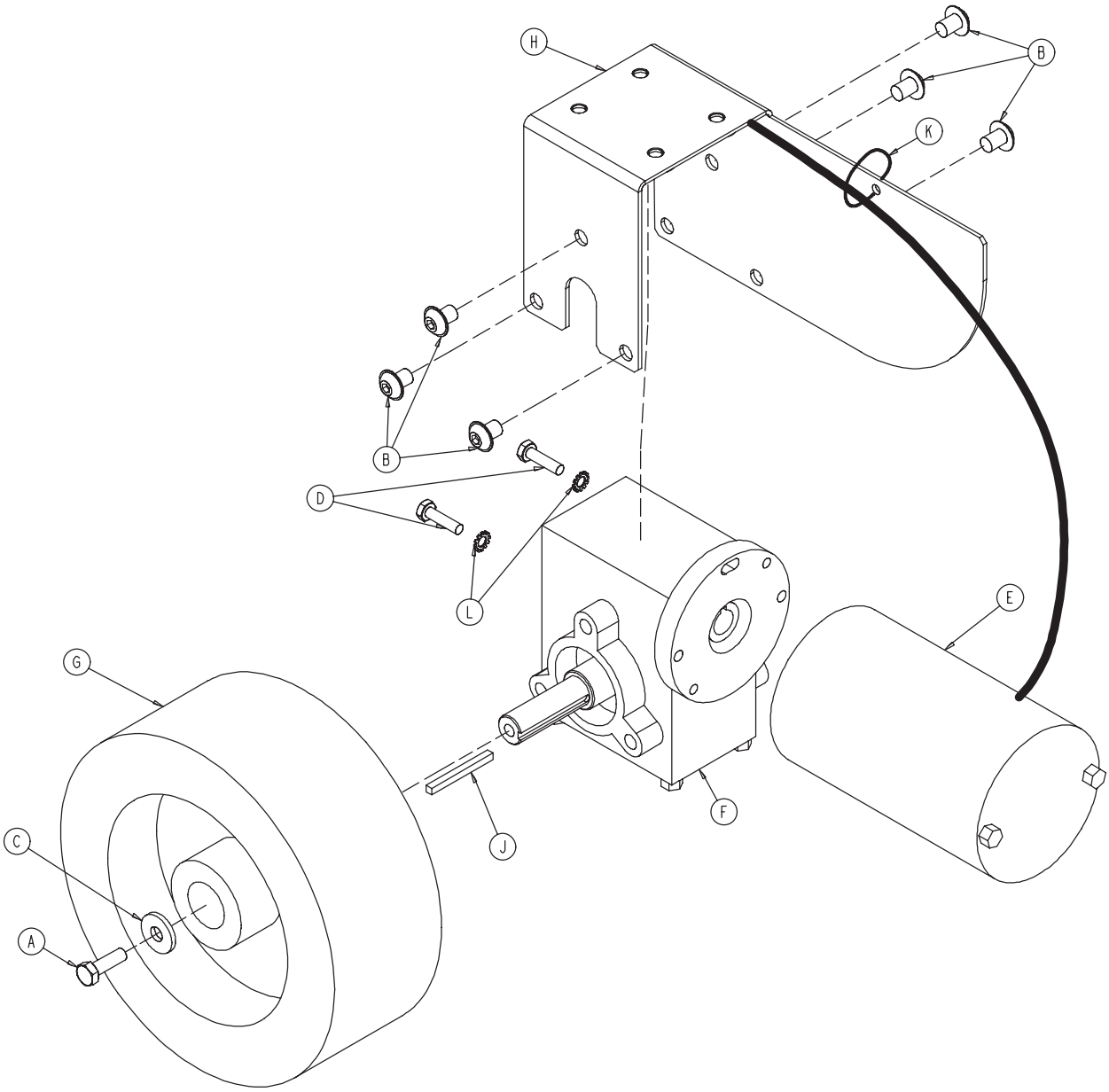

Item	Part No.	Part Name	Qty.
A	8839-793-700	Hex Head Cap Screw	1
B	0004-338-000	Flanged Button Head Cap Screw	6
C	0011-262-000	Washer	1
D	0003-054-000	Hex Head Cap Screw	2
E	3002-001-072	Drive Train Motor	1
F	2040-001-073	Gear Box	1
G	2040-001-074	Drive Train Wheel	1
H	2040-001-075	Motor Mounting Bracket	1
J	2040-001-097	Square Key	1
K	3000-300-113	Wire Tie	1
L	0013-010-000	Star Washer	2

Return To Table of Contents

Zoom® Option, Drive Wheel Lift Lever Assembly

2040-001-012

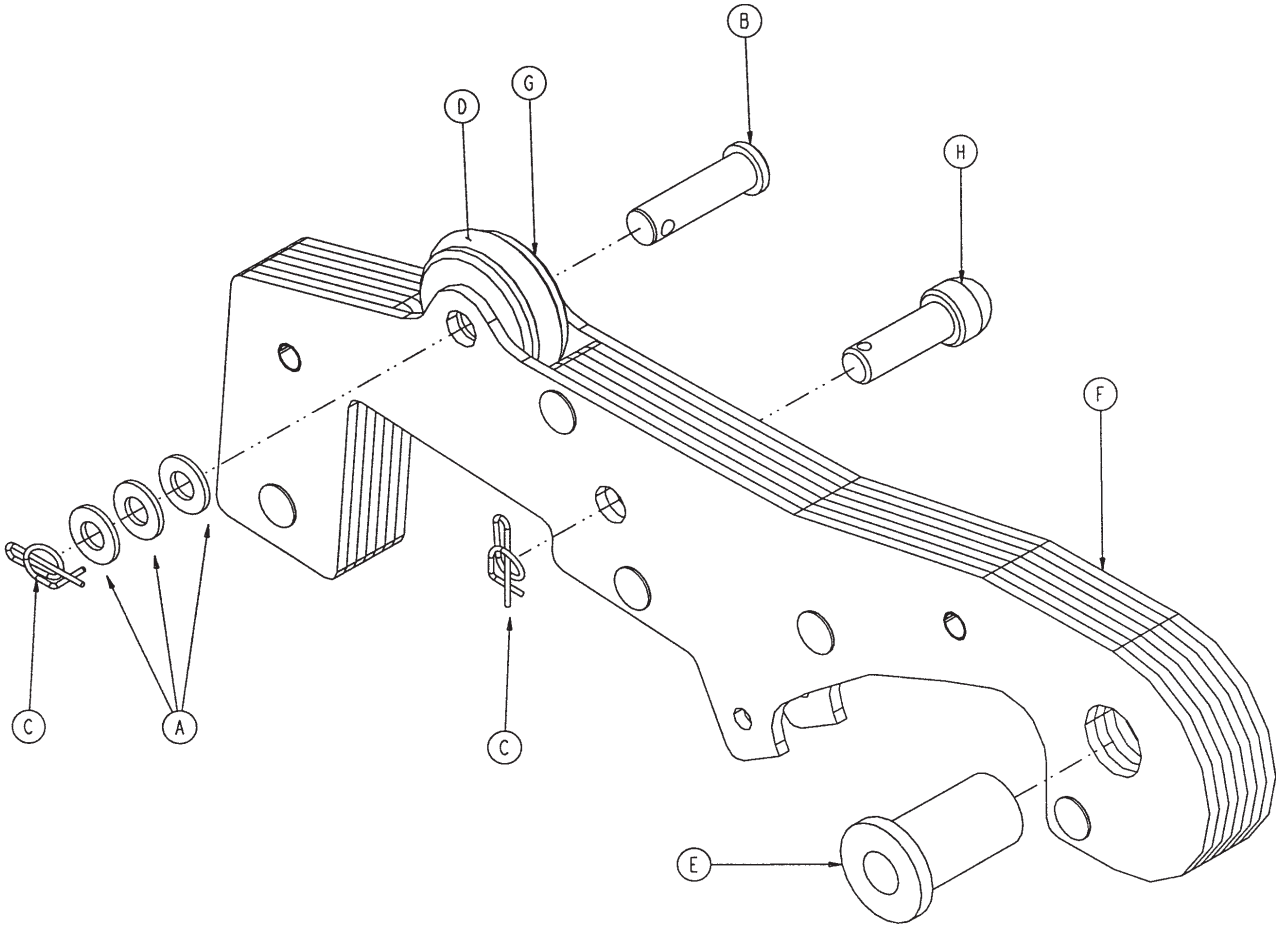

Item	Part No.	Part Name	Qty.
A	0011-003-000	Washer	3
B	0026-297-000	Clevis Pin	1
C	0027-021-000	Rue Ring	2
D	0045-232-000	O-Ring	1
E	0081-070-000	Flange Bearing	1
F	2040-201-013	Drive Wheel Lift Plate Ass'y	1
G	2040-001-087	Lift Lever Roller	1
H	2040-001-099	Lift Lever Guide	1

Return To Table of Contents

Zoom® Option, Base Power Assembly

3002-001-030

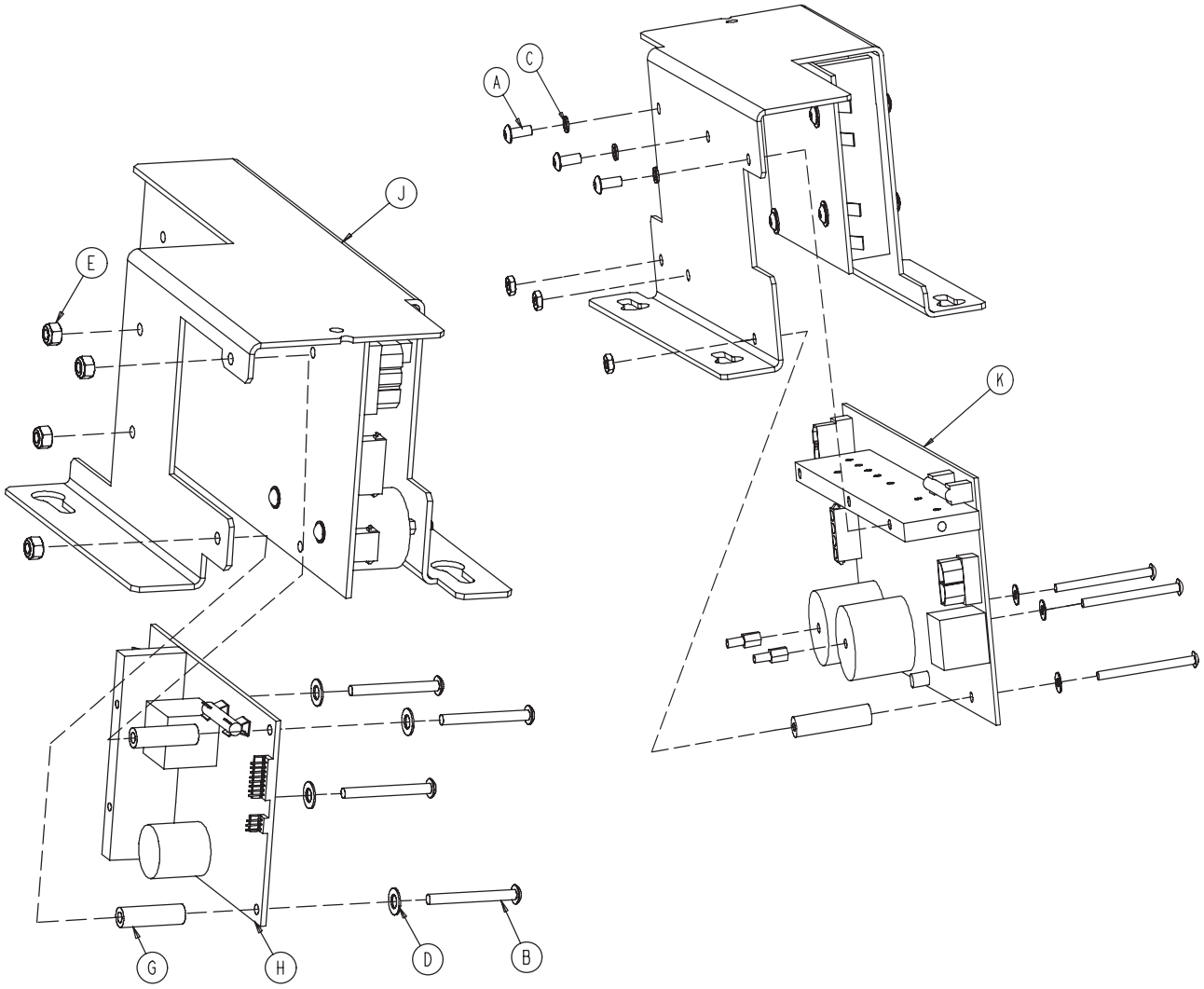

Item	Part No.	Part Name	Qty.
A	0004-263-000	But. Head Cap Screw	3
B	0004-315-000	But. Head Cap Screw	4
C	0012-006-000	Helical Lock Washer	3
D	0014-004-000	Nylon Washer	4
E	0016-002-000	Fiberlock Nut	4
G	0059-187-000	Spacer	2
H	2040-001-900	Power Board	1
J	3002-001-017	Charger/Inverter Heat Bracket	1
K	3002-001-930	Charger/Inverter Board Assembly	1

Return To Table of Contents

Litter Assembly, Standard Components

For Reference Only: 3006-300-002

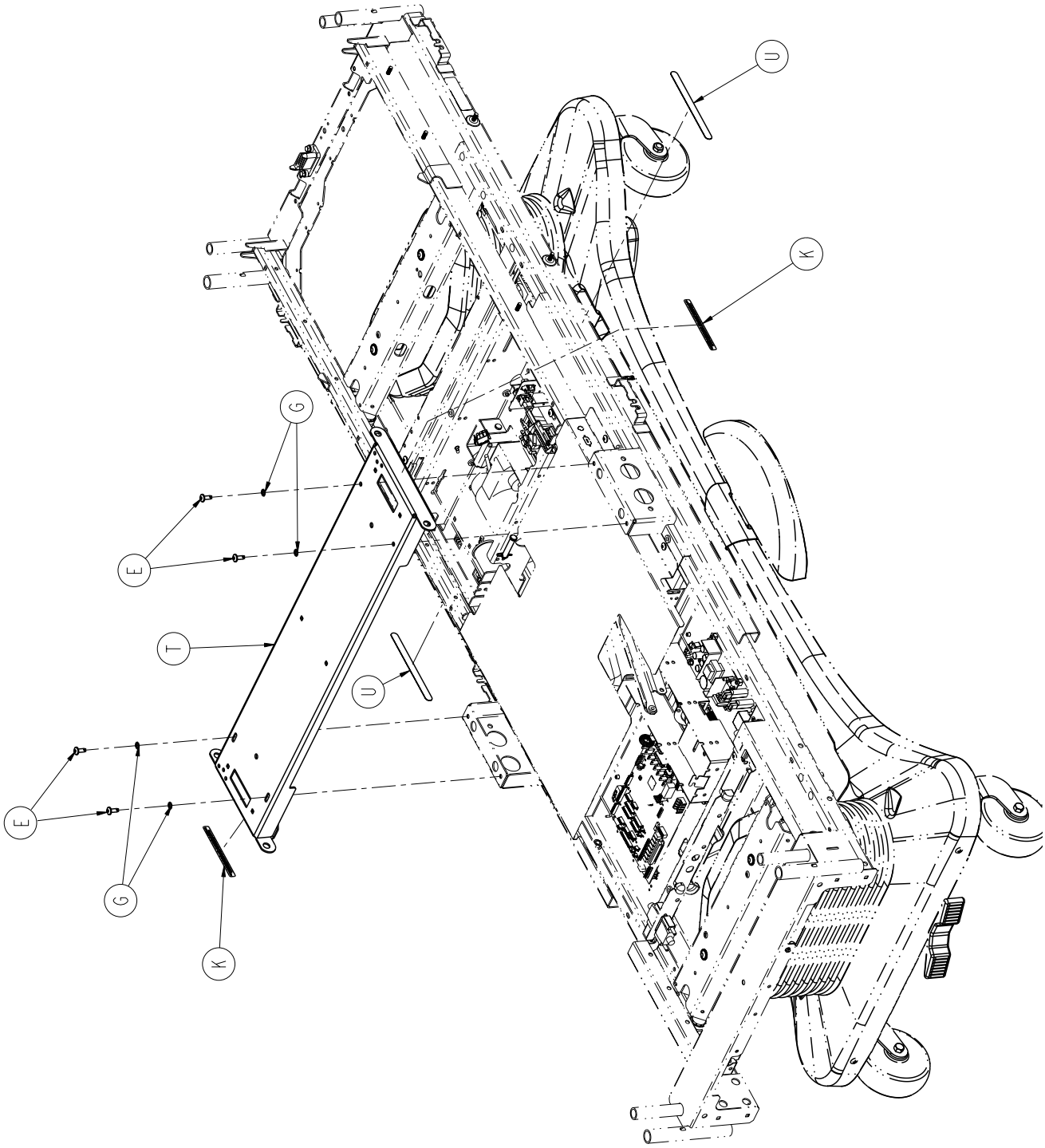

Return To Table of Contents

Litter Assembly, Standard Components

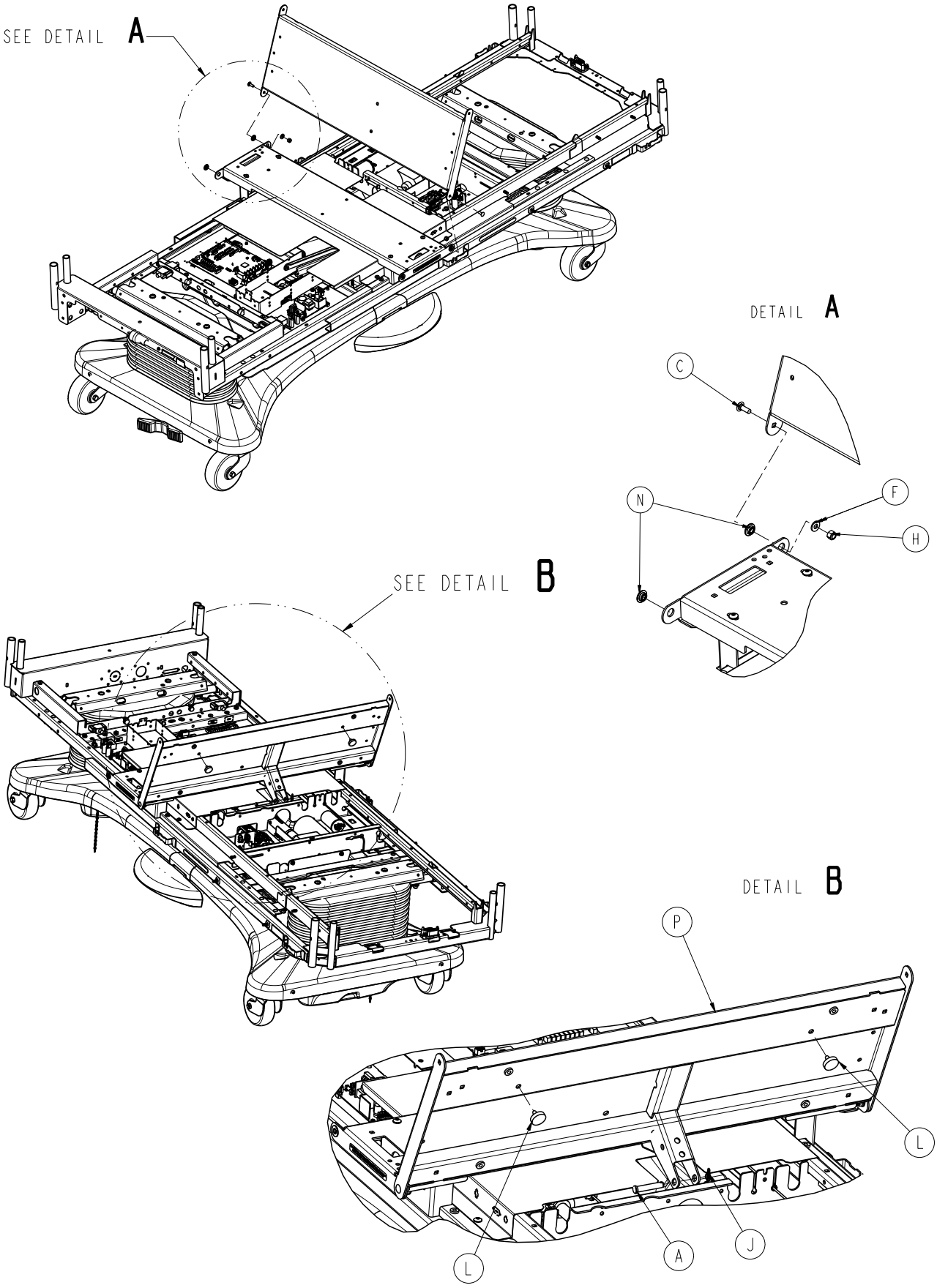

Return To Table of Contents

Litter Assembly, Standard Components

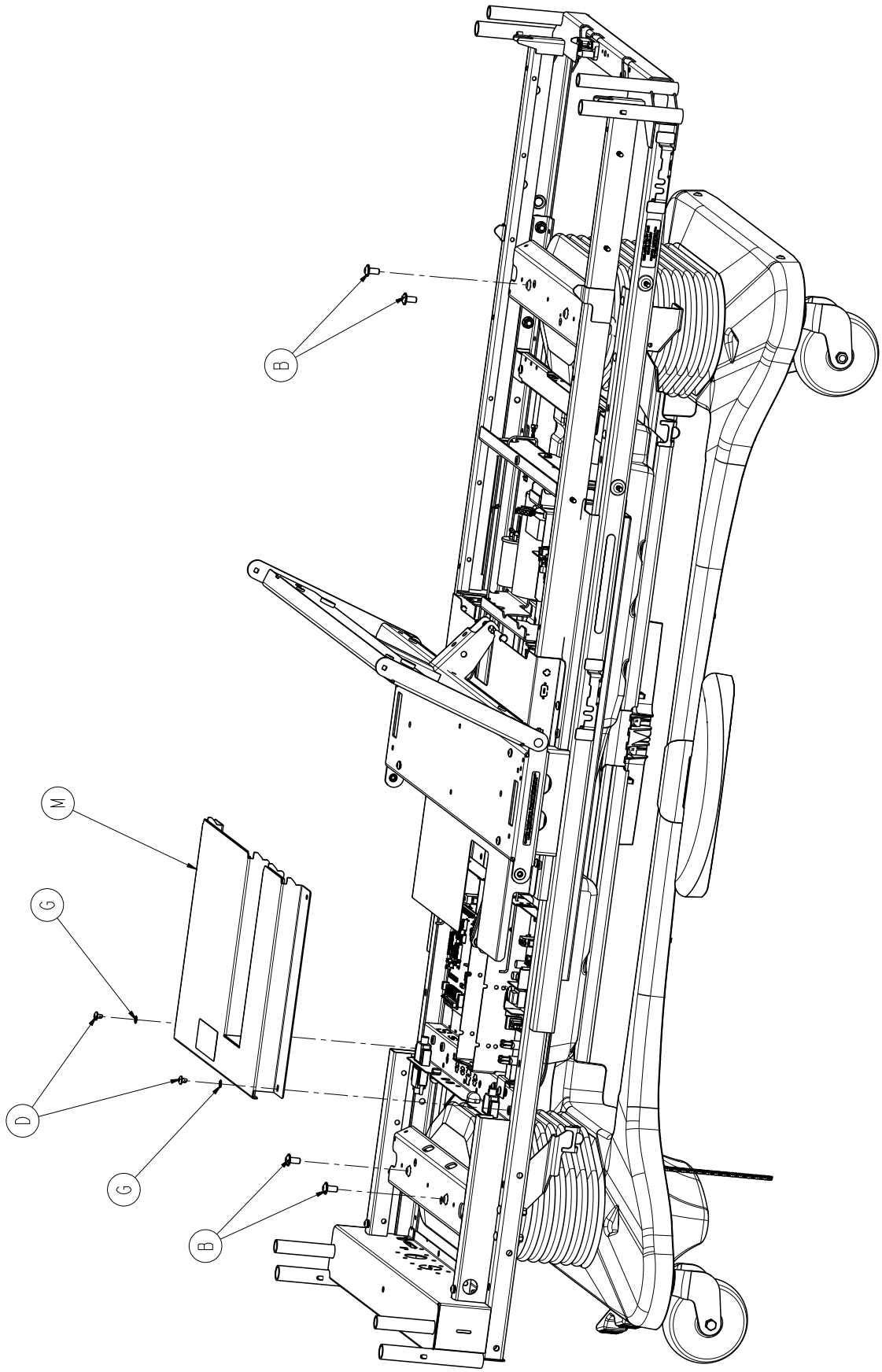

Return To Table of Contents

Litter Assembly, Standard Components

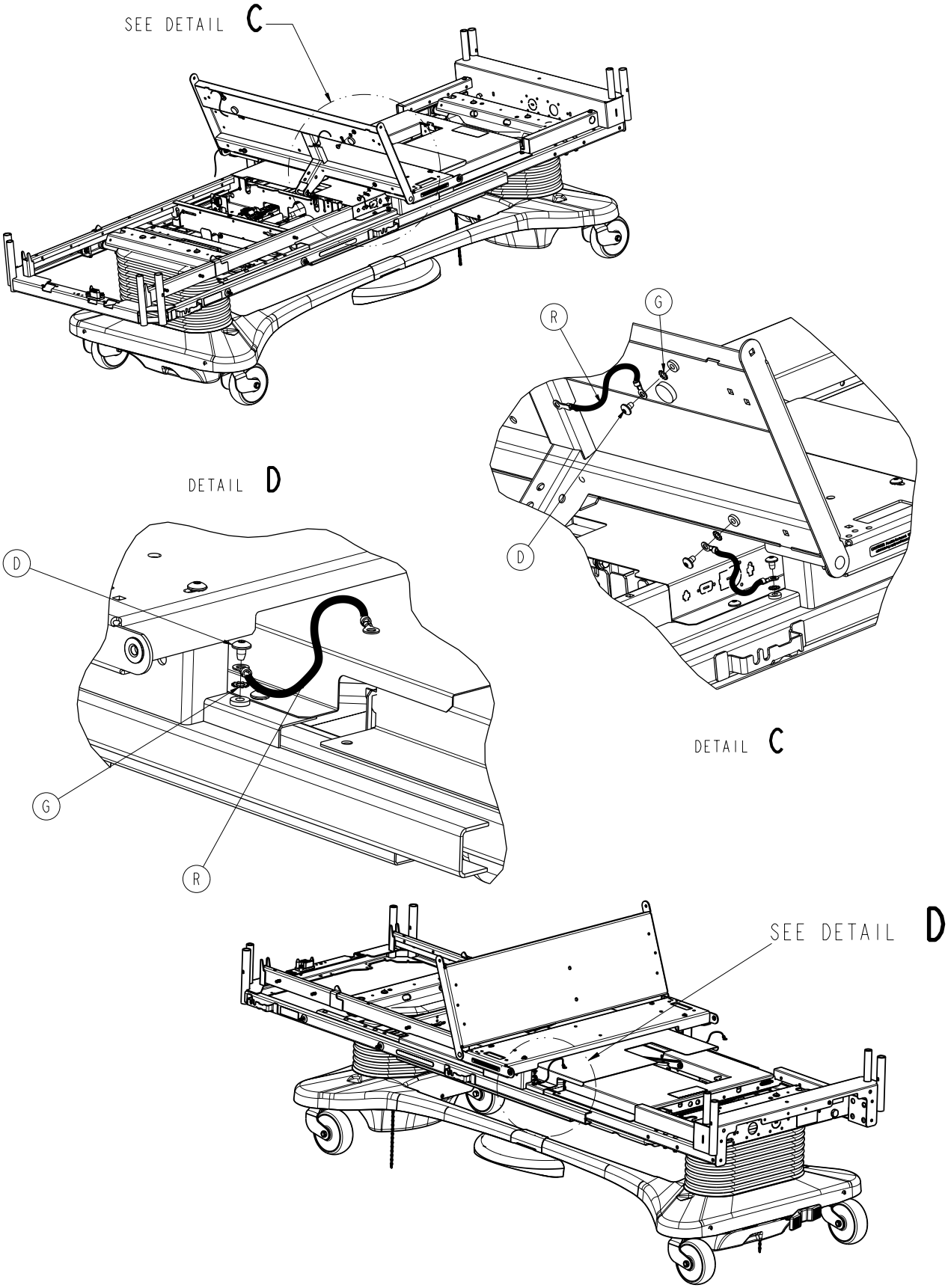

Return To Table of Contents

Litter Assembly, Standard Components - 3006-300-002 (Reference Only)

Item	Part No.	Part Name	Qty.
A	0026-277-000	Clevis Pin	1
B	0004-338-000	Truss Head Screw	4
C	0005-017-000	Carriage Bolt	2
D	0007-053-000	Truss Head Screw	10
E	0007-063-000	Truss Head Screw	4
F	0011-077-000	Washer	2
G	0013-010-000	External Tooth Lock Washer	14
H	0016-028-000	Fiberlock Hex Nut	2
J	0027-022-000	Rue Ring Cotter	1
K	3006-088-820	Caution Label	2
L	3001-300-008	Bumper	2
M	3006-301-097	CPU Cover Assembly	1
N	3001-300-099	Fowler Modified Bushing	4
P	3006-301-170	Thigh Litter Assembly	1
R	3002-300-870	8” Litter Ground Jumper	2
T	3006-301-135	Seat Weldment Skin	1
U	3006-090-100	500 Lb. Maximum Label	2

Return To Table of Contents

Litter Assembly, Standard Bed

For Reference Only: 3006-343-002

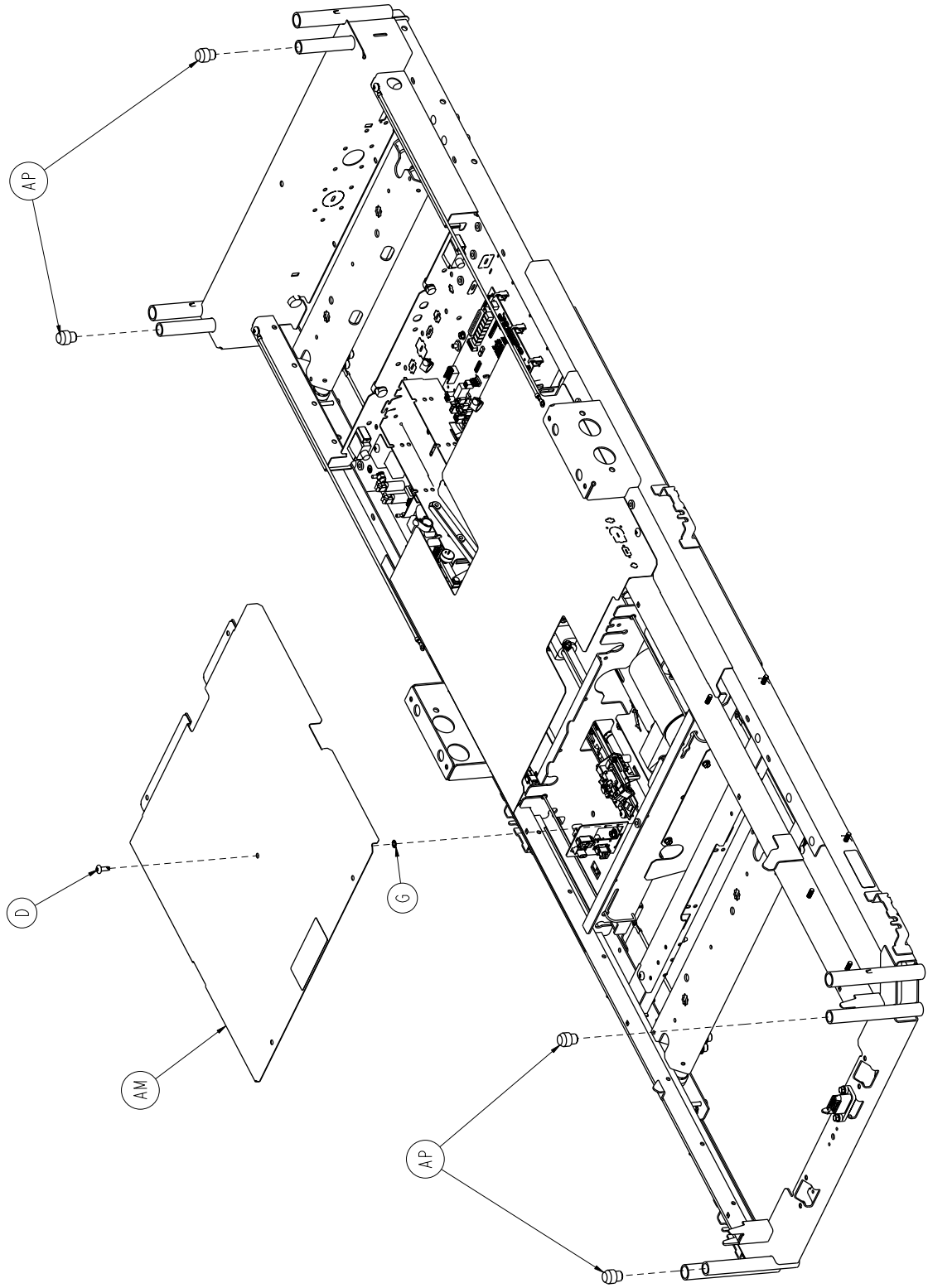

Return To Table of Contents

Litter Assembly, Standard Bed

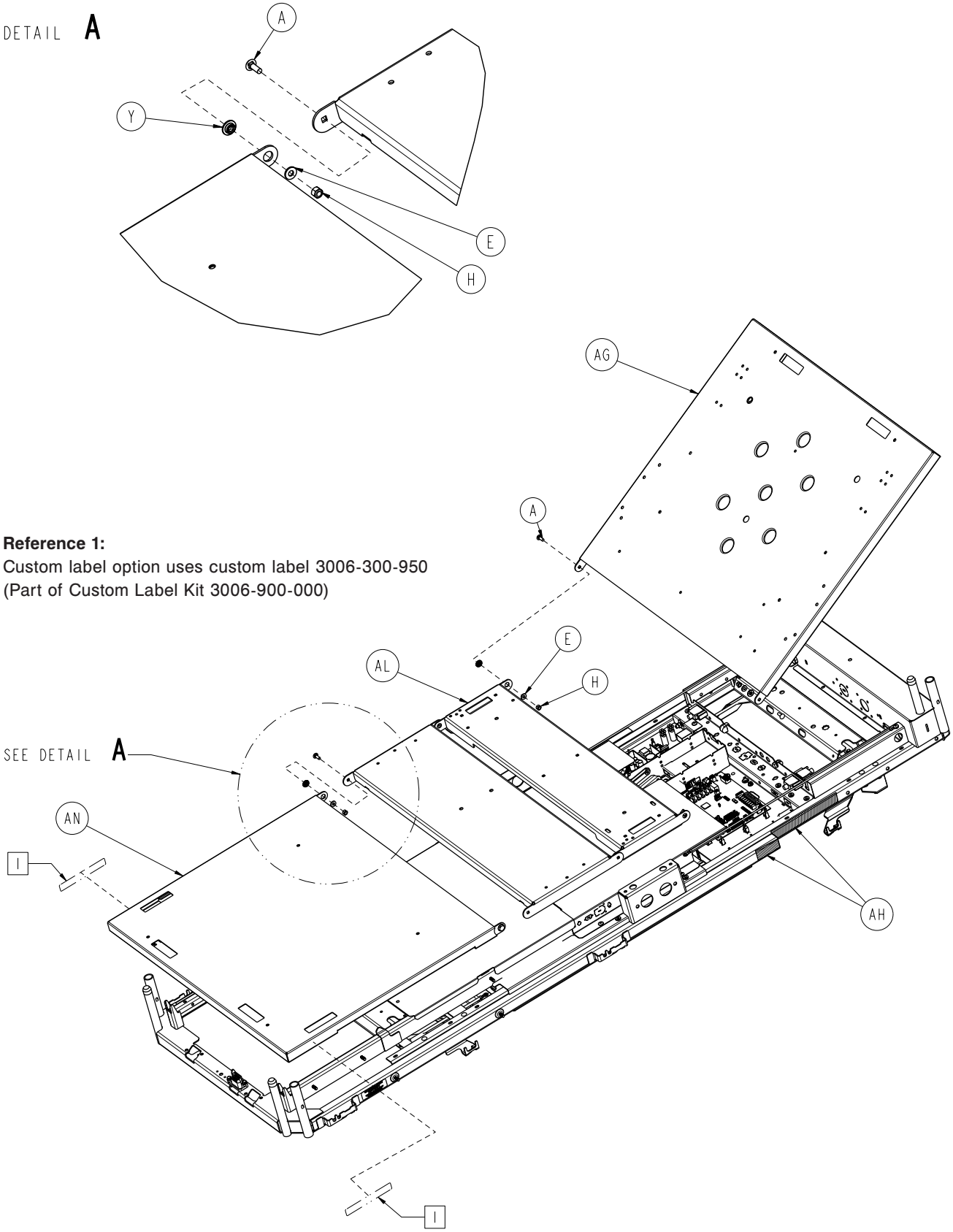

Reference 1:
Custom label option uses custom label 3006-300-950
(Part of Custom Label Kit 3006-900-000)

Return To Table of Contents

Litter Assembly, Standard Bed

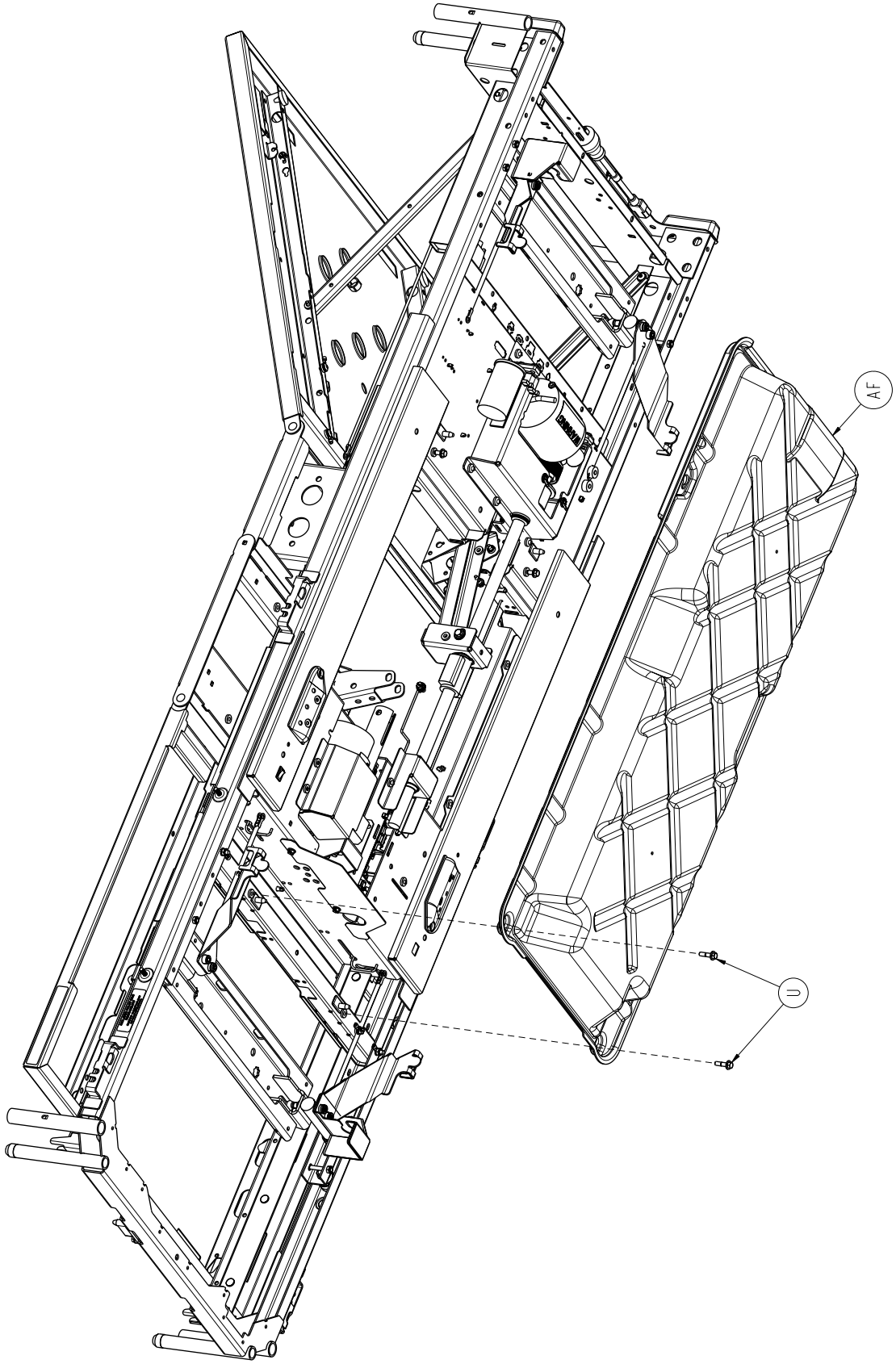

Return To Table of Contents

Litter Assembly, Standard Bed

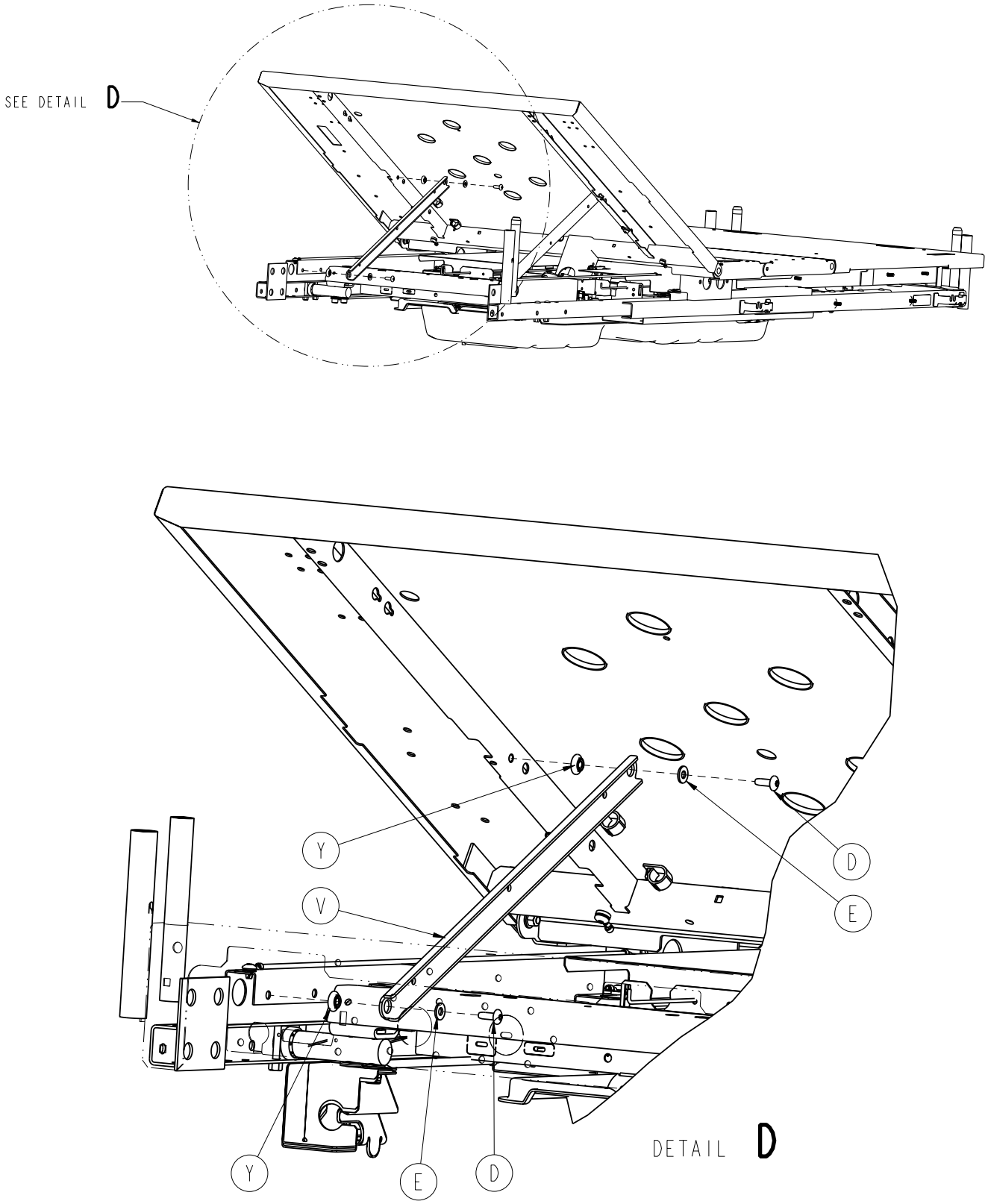

Return To Table of Contents

Litter Assembly, Standard Bed

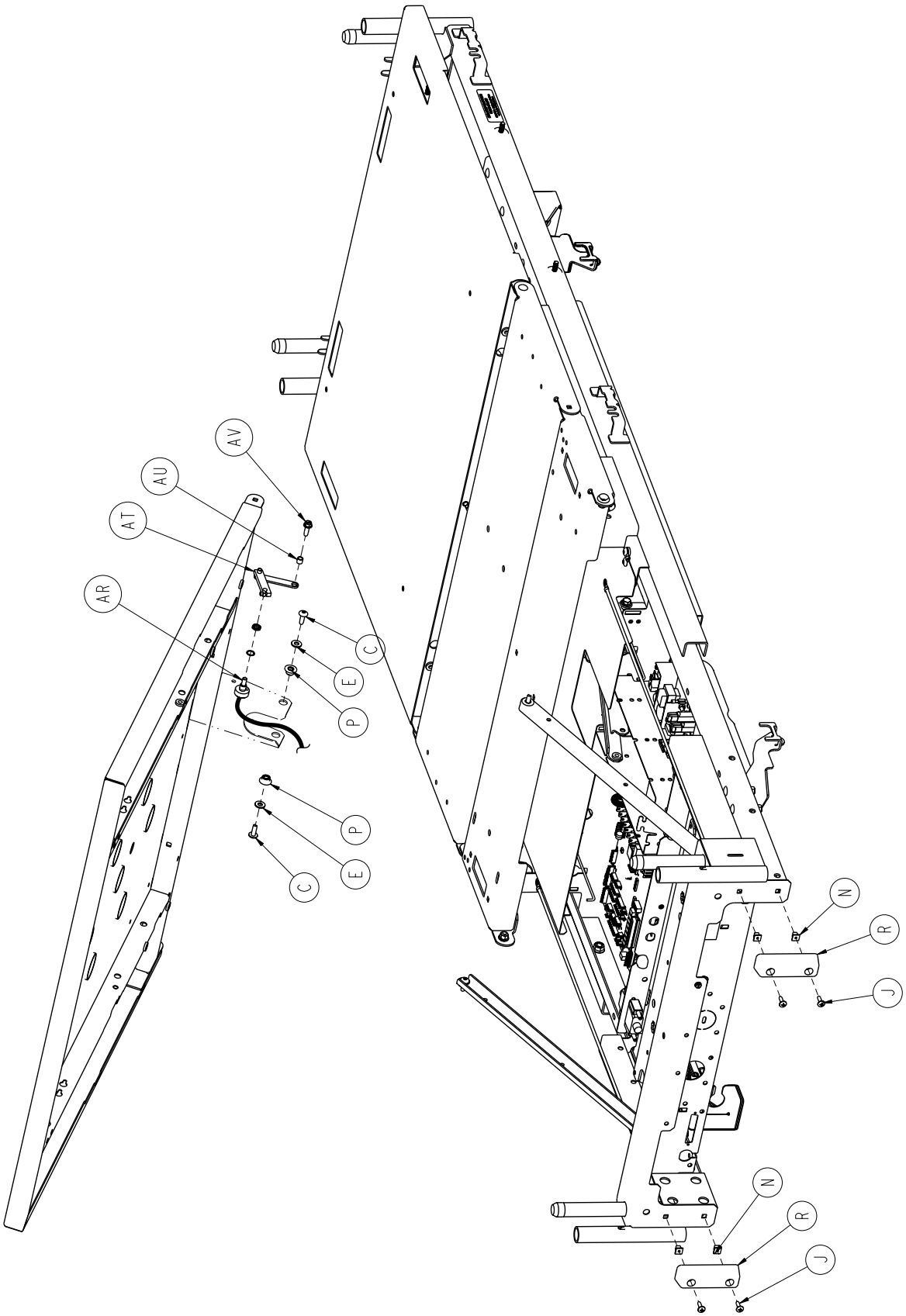

Return To Table of Contents

Litter Assembly, Standard Bed

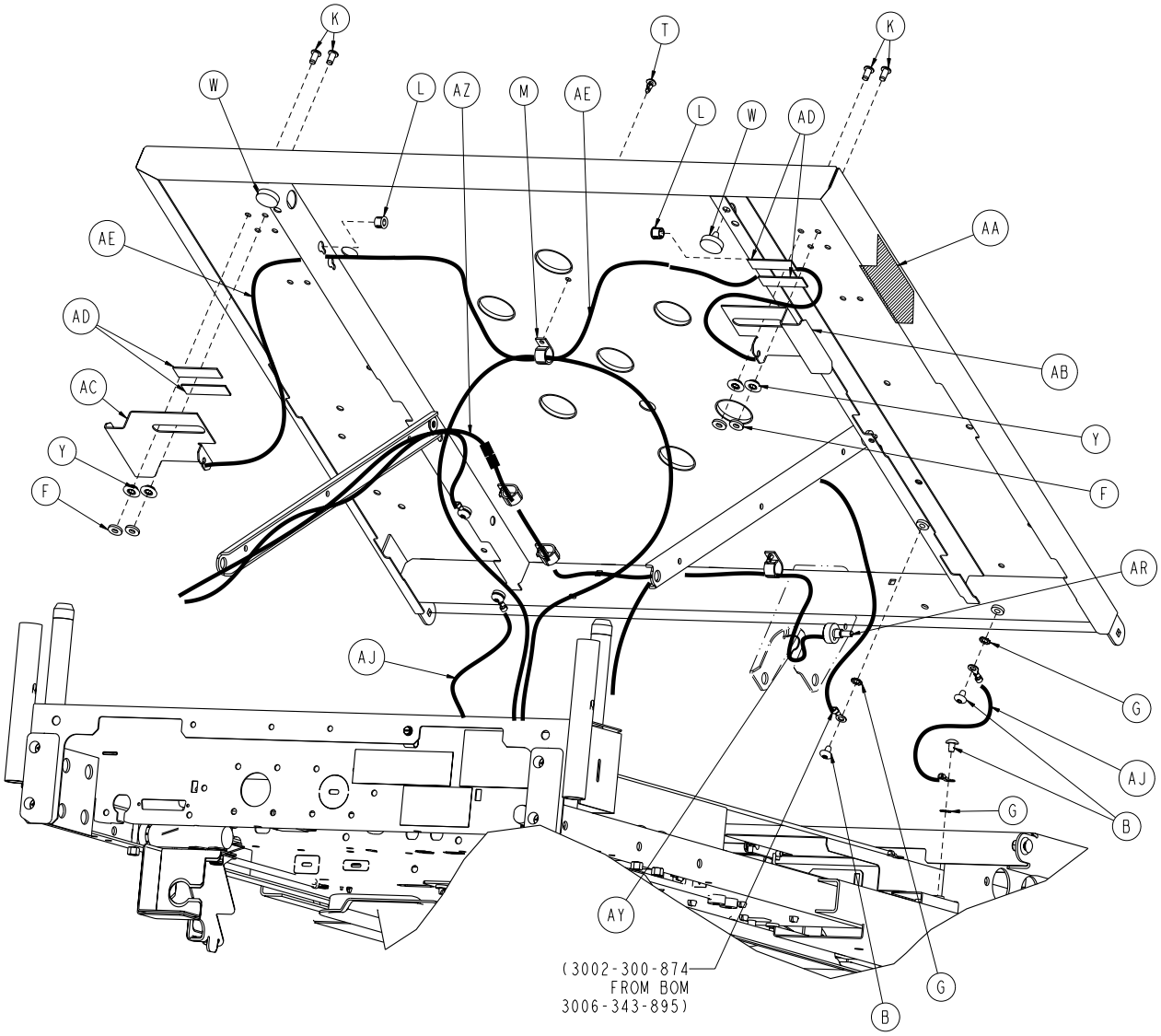

Return To Table of Contents

Litter Assembly, Standard Length Bed 3006-343-002 (Reference Only)

Item	Part No.	Part Name	Qty.
A	0005-017-000	Carriage Bolt	4
B	0007-053-000	Truss Head Screw	6
C	0007-063-000	Truss Head Screw	2
D	0007-065-000	Truss Head Screw	5
E	0011-077-000	Washer	10
F	0011-376-000	Washer	4
G	0013-010-000	External Tooth Lock Washer	11
H	0016-028-000	Fiberlock Hex Nut	4
J	0023-080-000	Truss Head Screw	4
K	0025-120-000	Pop Rivet	4
L	0030-052-000	Heyco Snap Bushing	2
M	0059-743-000	Wire Harness Clip	4
N	3000-300-002	Plastic Clip Nut	4
P	3000-300-099	Fowler Bushing	2
R	3000-300-350	Head End Bumper	2
T	3000-300-477	CPR Conduit Stud	4
U	3001-200-229	Mounting Standoff	2
V	3006-300-005	Fowler Link	2
W	3001-300-008	Bumper	2
Y	3001-300-099	Fowler Bushing	10
AA	3001-300-603	CPR Release Label	2
AB	3001-300-661	CPR Release Handle, Right	1
AC	3001-300-662	CPR Release Handle, Left	1
AD	3001-300-663	Velcro® Strip	4
AE	3001-300-670	CPR Cable Assembly	2
AF	3006-300-084	Motion Interrupt Pan	1
AG	3002-300-145	Fowler Litter Weldment	1
AH	3006-300-602	Fowler Elevation Angle, Label	1
AJ	3002-300-870	8” Ground Litter Jumper	2
AK	3006-343-895	Electrical Assembly, Standard Length Bed	1
AL	3006-300-002	Litter Assembly, Standard Components	1
AM	3006-300-042	Foot Cover Assembly	1
AN	3006-300-190	Foot Litter Weldment	1
AP	3006-300-349	Cap	4
AR	3001-345-807	Fowler Pot Cable	1
AT	3004-345-450	Pot Linkage Assembly	1
AU	3001-400-558	Spacer	1
AV	0003-226-000	Hex Head Washer Screw	1
AY	3000-300-113	8” Cable Tie	1
AZ	3001-345-809	Fowler Pot Extension Cable (KCl)	1

Return To Table of Contents

Litter Assembly, Battery Backup Option

For Reference Only: 3006-350-200

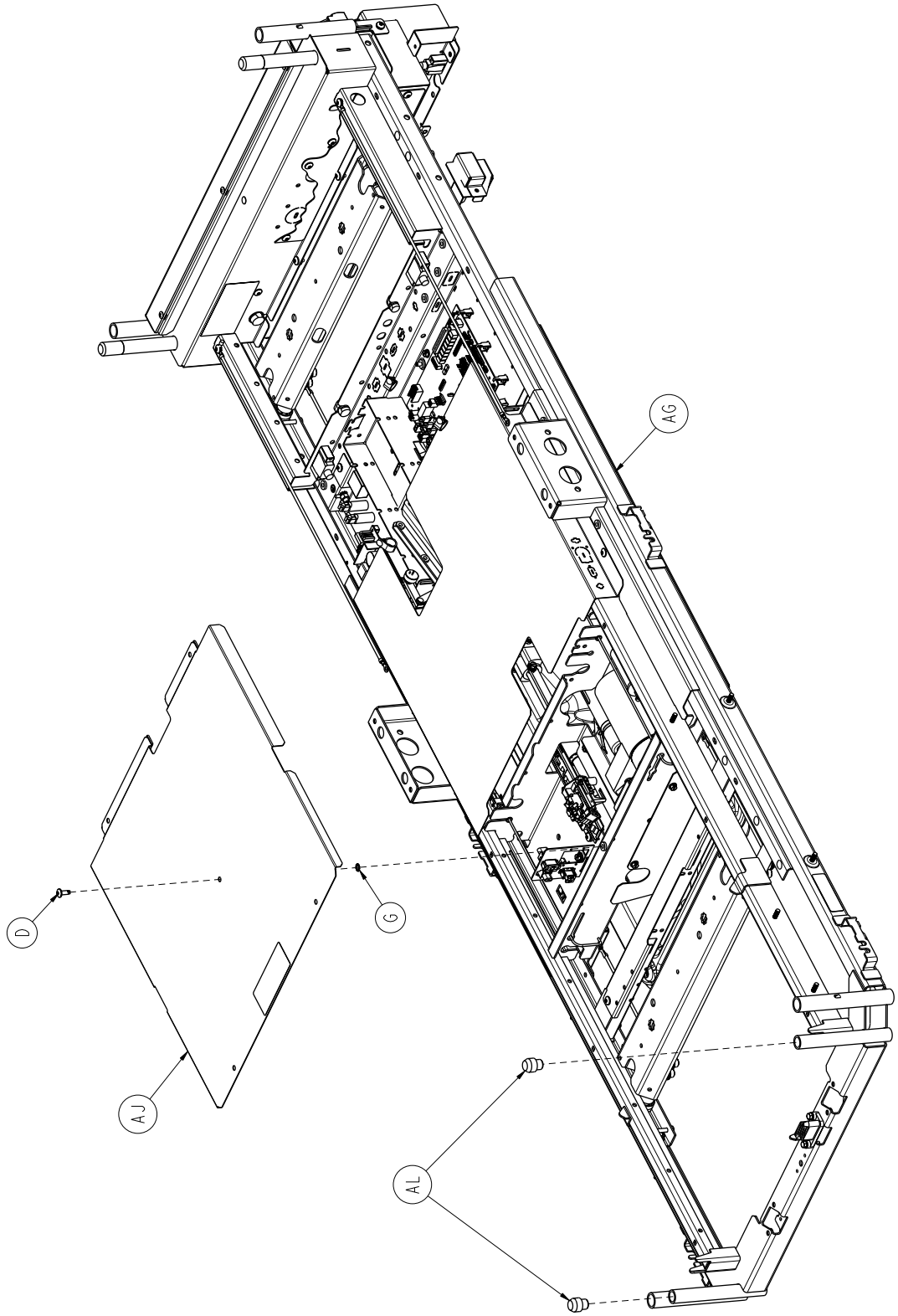

Return To Table of Contents

Litter Assembly, Battery Backup Option

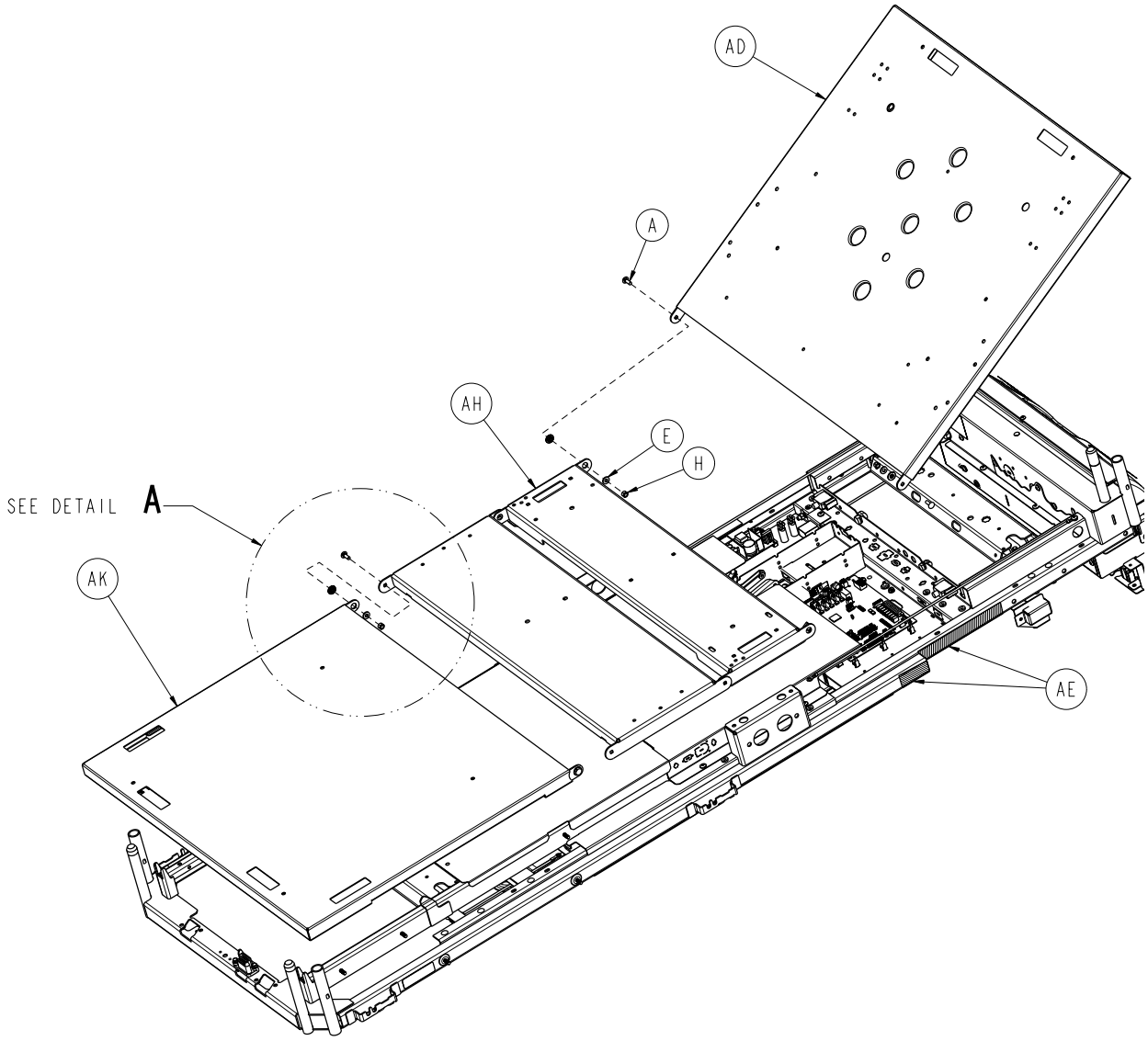

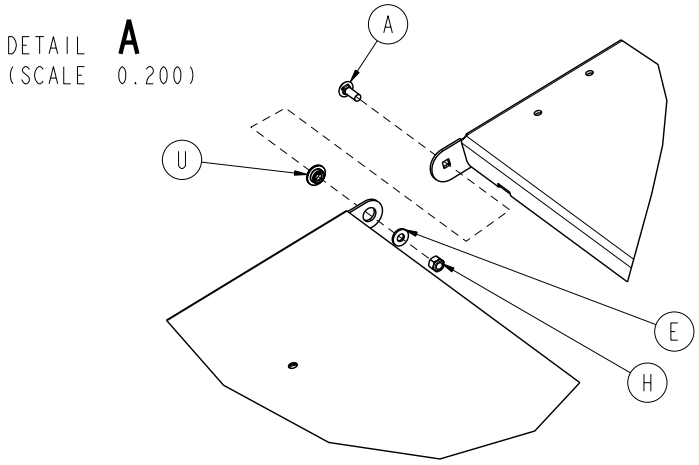

Return To Table of Contents

Litter Assembly, Battery Backup Option

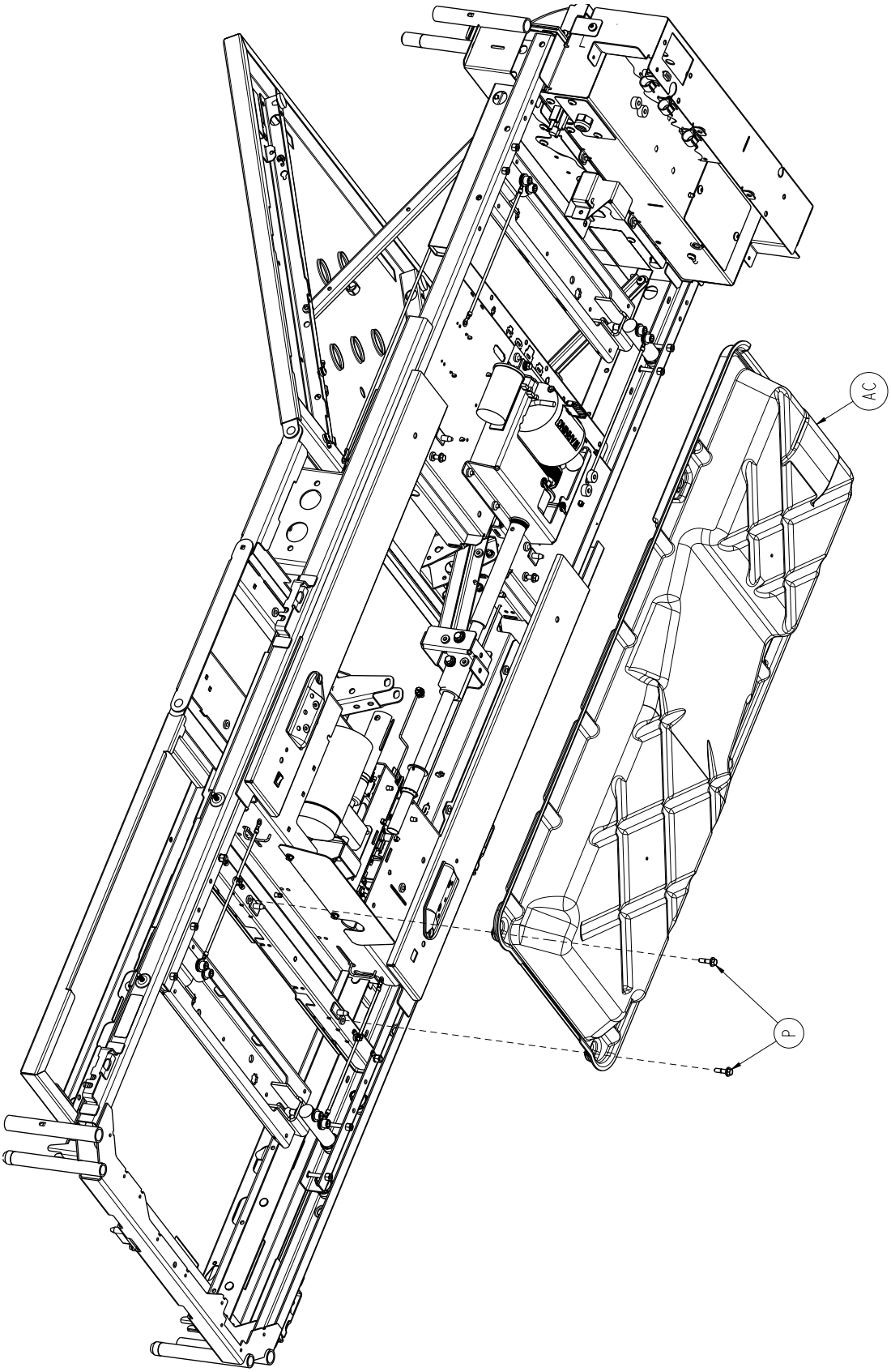

Return To Table of Contents

Litter Assembly, Battery Backup Option

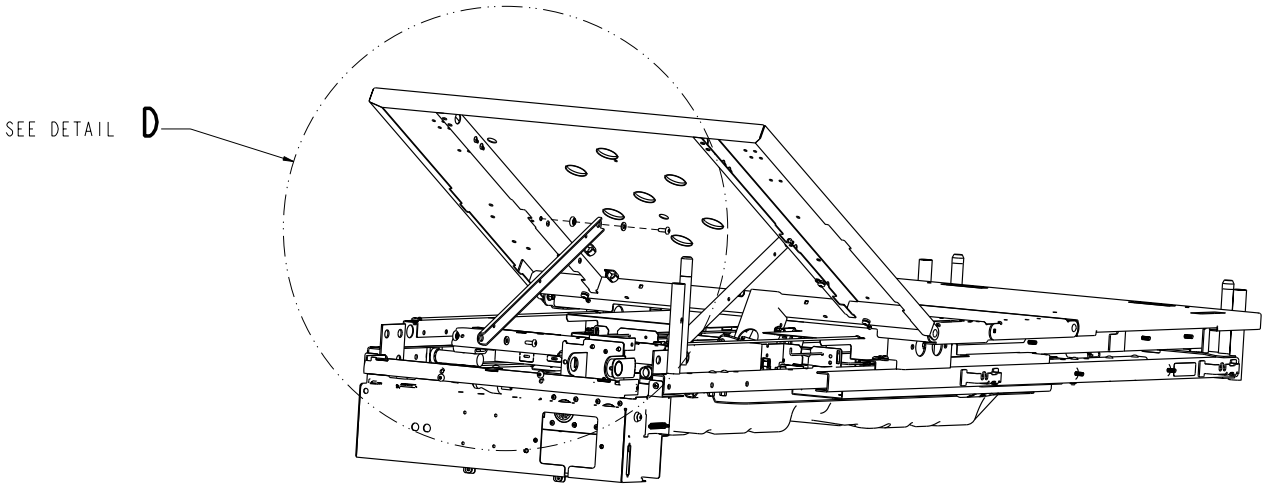

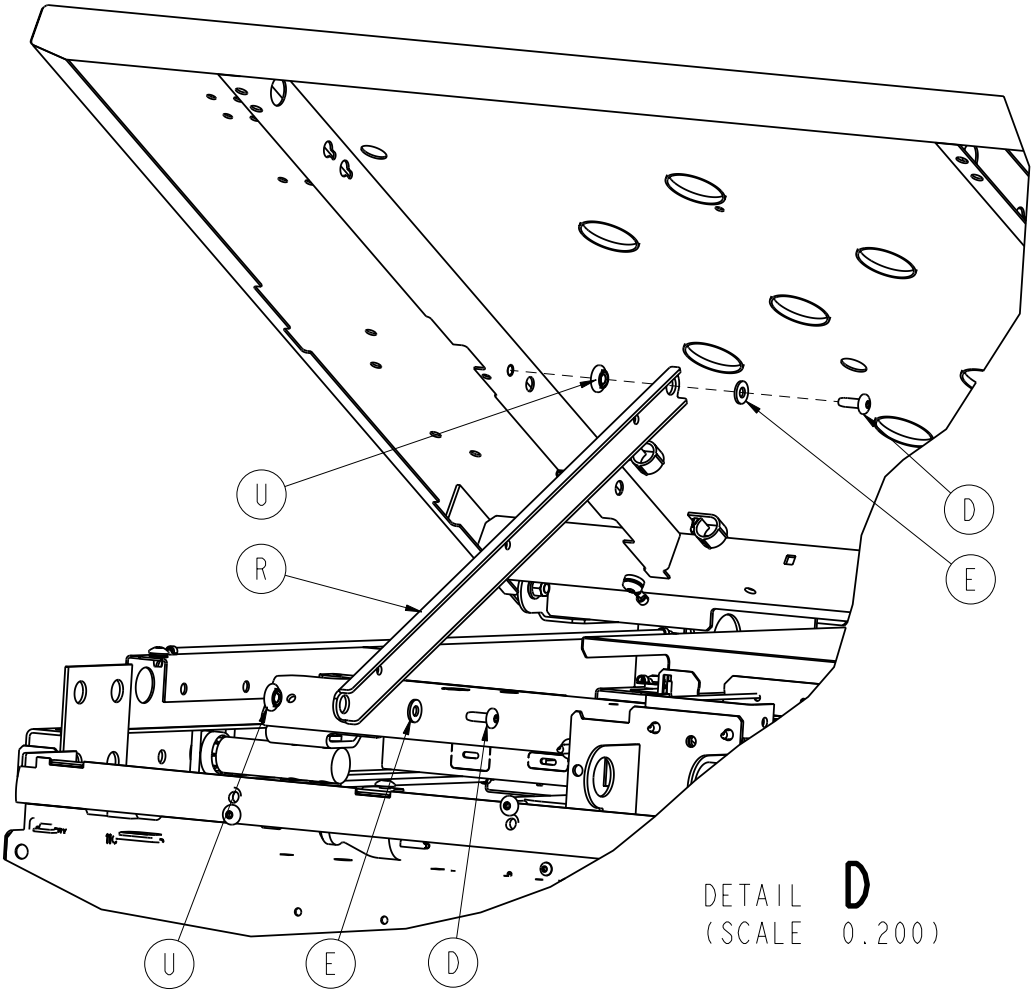

Return To Table of Contents

Litter Assembly, Battery Backup Option

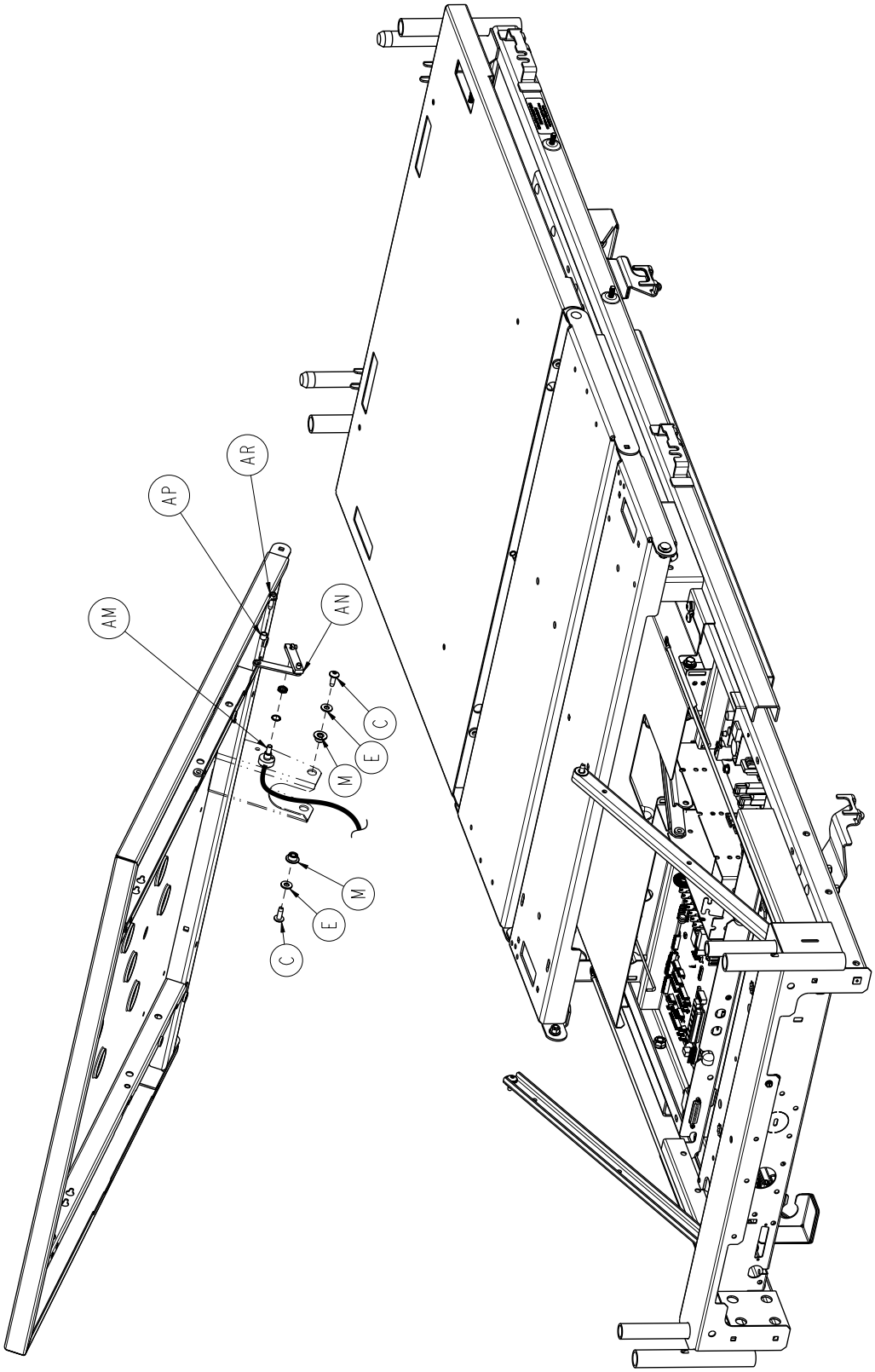

Return To Table of Contents

Litter Assembly, Battery Backup Option

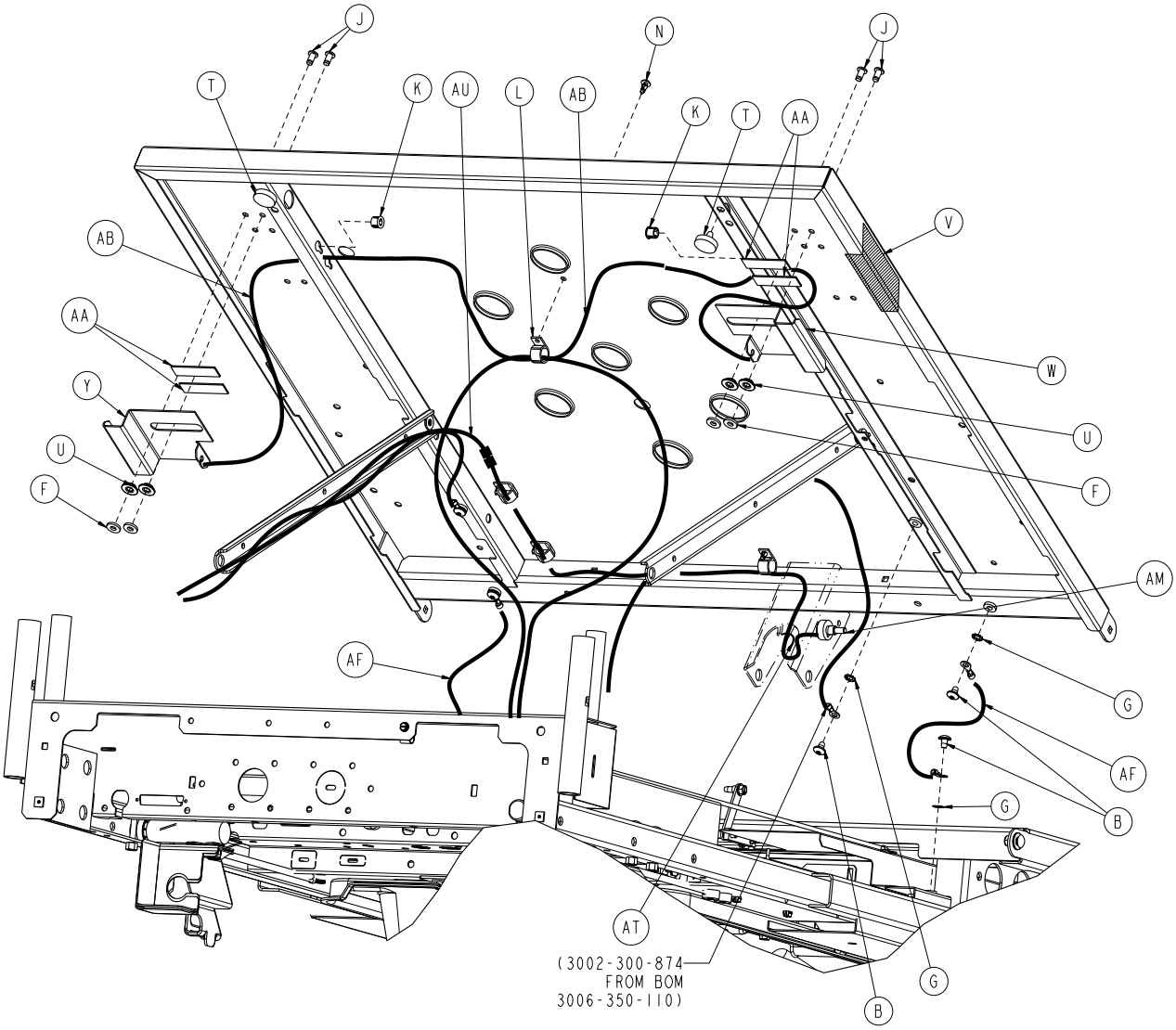

Return To Table of Contents

Litter Assembly, Battery Backup Option

Litter Assembly, Battery Backup Option 3006-350-200 (Reference Only)

Item	Part No.	Part Name	Qty.
A	0005-017-000	Carriage Bolt	4
B	0007-053-000	Truss Head Screw	6
C	0007-063-000	Truss Head Screw	2
D	0007-065-000	Truss Head Screw with Patch	5
E	0011-077-000	Washer	10
F	0011-376-000	Washer	4
G	0013-010-000	External Tooth Lock Washer	11
H	0016-028-000	Fiberlock Hex Nut	4
J	0025-120-000	Pop Rivet	4
K	0030-052-000	Heyco Snap Bushing	2
L	0059-743-000	Wire Harness Clip	4
M	3000-300-099	Fowler Modified Bushing	2
N	3000-300-477	CPR Conduit Stud	1
P	3001-200-229	Mounting Standoff	2
R	3006-301-005	Fowler Link	2
T	3001-300-008	Bumper	2
U	3001-300-099	Fowler Modified Bushing	10
V	3006-300-603	CPR Release Handle	2
W	3001-300-661	CPR Handle, RH	1
Y	3001-300-662	CPR Handle, LH	1
AA	3001-300-663	Velcro® Strip	4
AB	3001-300-670	CPR Cable Assembly	2
AC	3006-300-084	Motion Interrupt Pan	1
AD	3006-300-145	Fowler Litter Weldment	1
AE	3006-300-602	Fowler Elevation Angle Label	1
AF	3002-300-870	8” Litter Ground Jumper	2
AG	3006-350-110	Electrical Litter Assembly	1
AH	3006-300-002	Litter Assembly, Std. Components	1
AJ	3006-300-042	Foot Cover Assembly	1
AK	3006-300-190	Foot Litter Weldment	1
AL	3006-300-349	Foot End Litter Cap	2
AM	3001-345-807	Fowler Pot Label	1
AN	3004-345-450	Pot Linkage Label	1
AP	3001-400-558	Spacer	1
AR	0003-226-000	Hex Washer Head Screw	1
AT	3000-300-113	8” Cable Tie	1
AU	3001-345-809	Fowler Pot Extension Cable (KCI)	1

Return To Table of Contents

For Reference Only: 5212-350-200

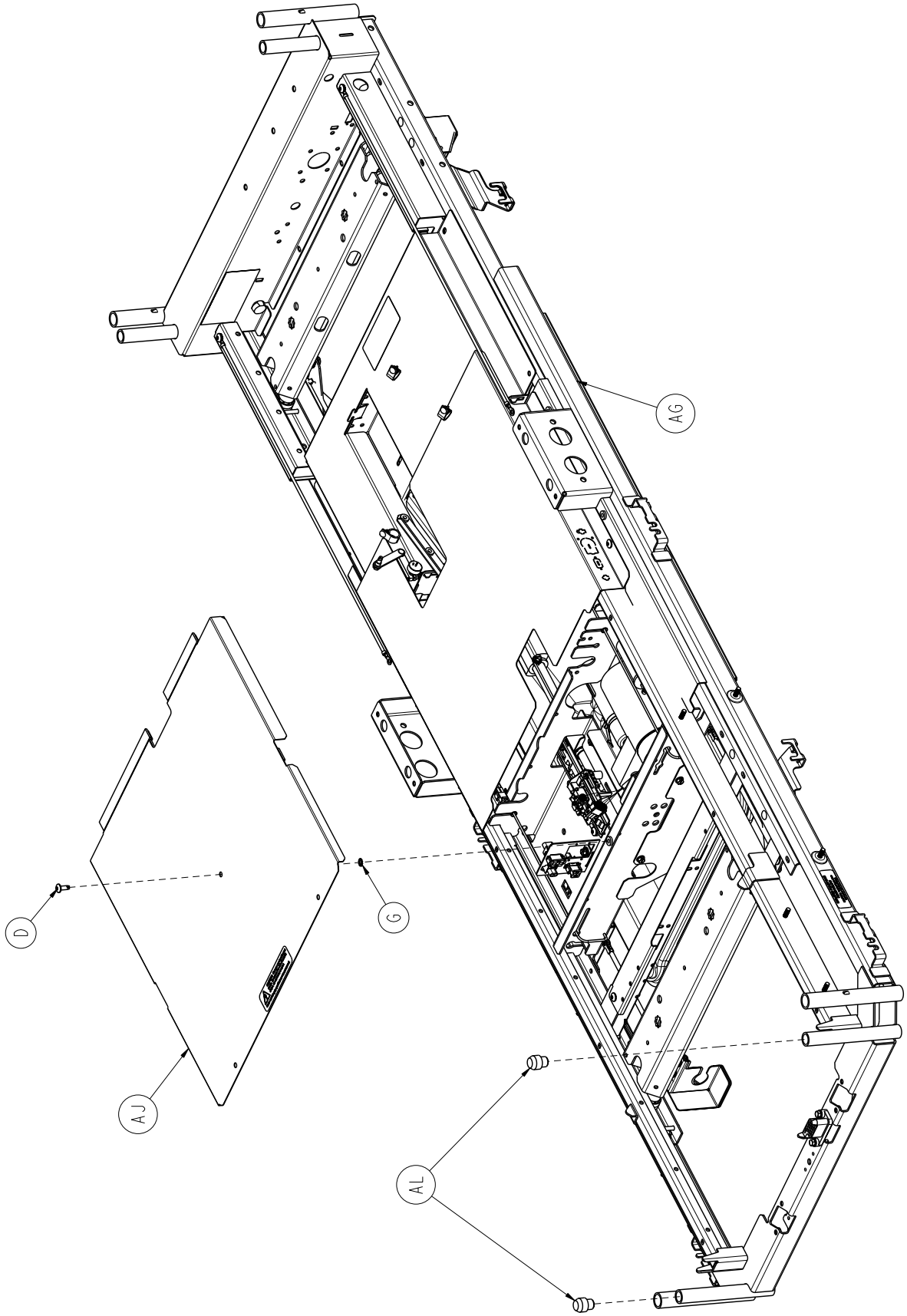

Return To Table of Contents

Litter Assembly, Battery Backup, *i*Bed® Wireless

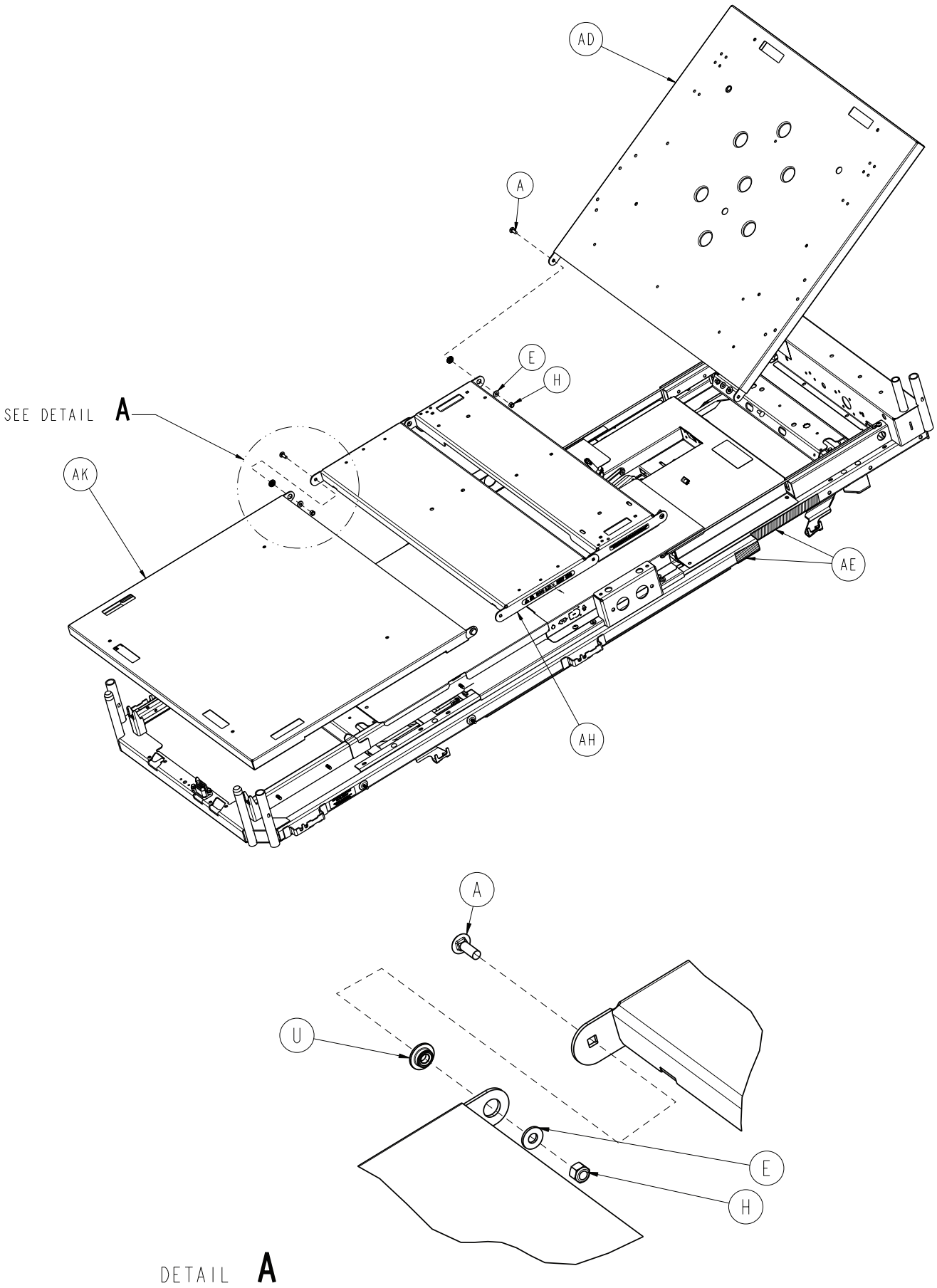

Return To Table of Contents

Litter Assembly, Battery Backup, *i*Bed® Wireless

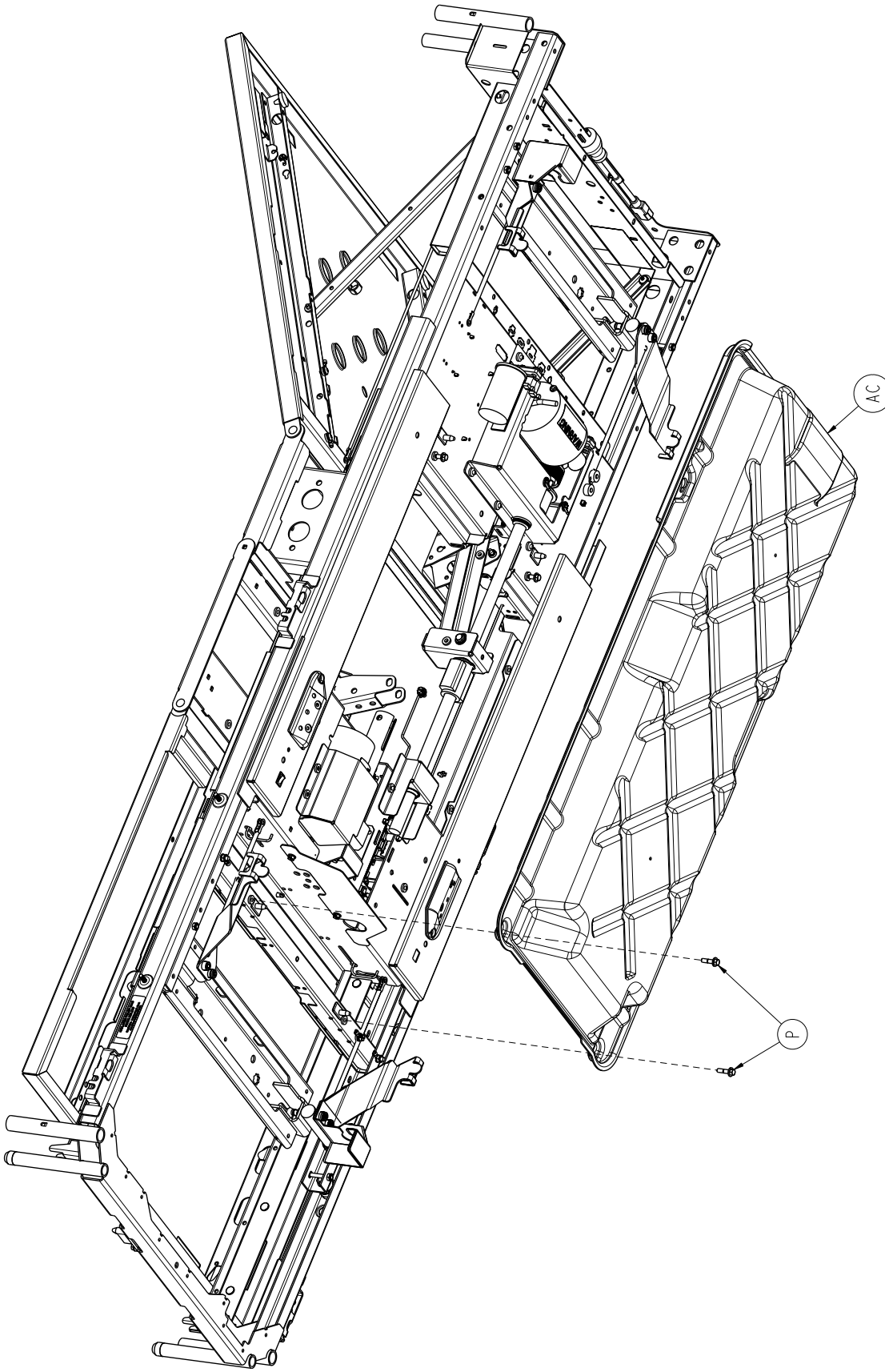

Return To Table of Contents

Litter Assembly, Battery Backup, *i*Bed® Wireless

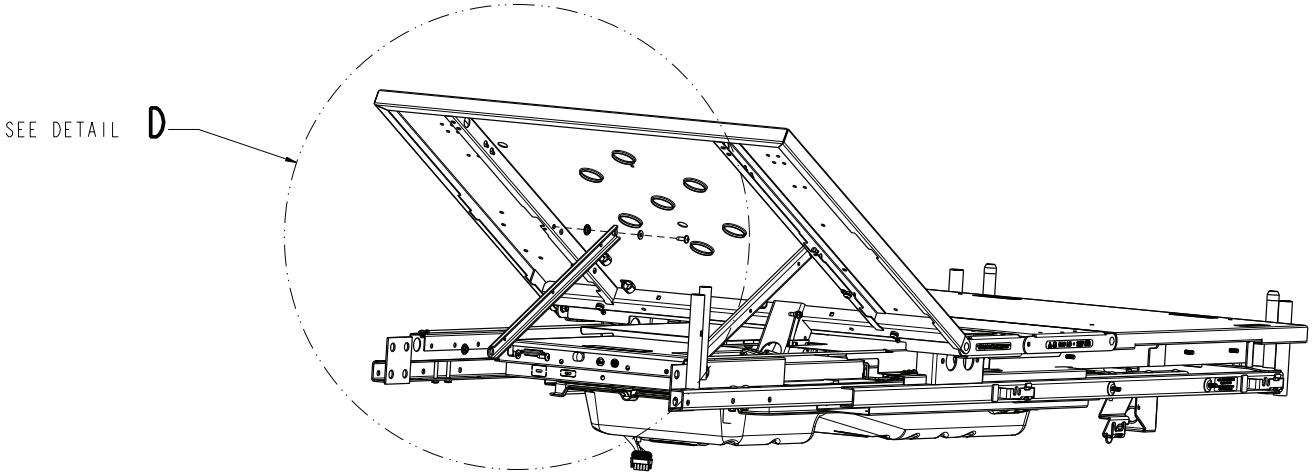

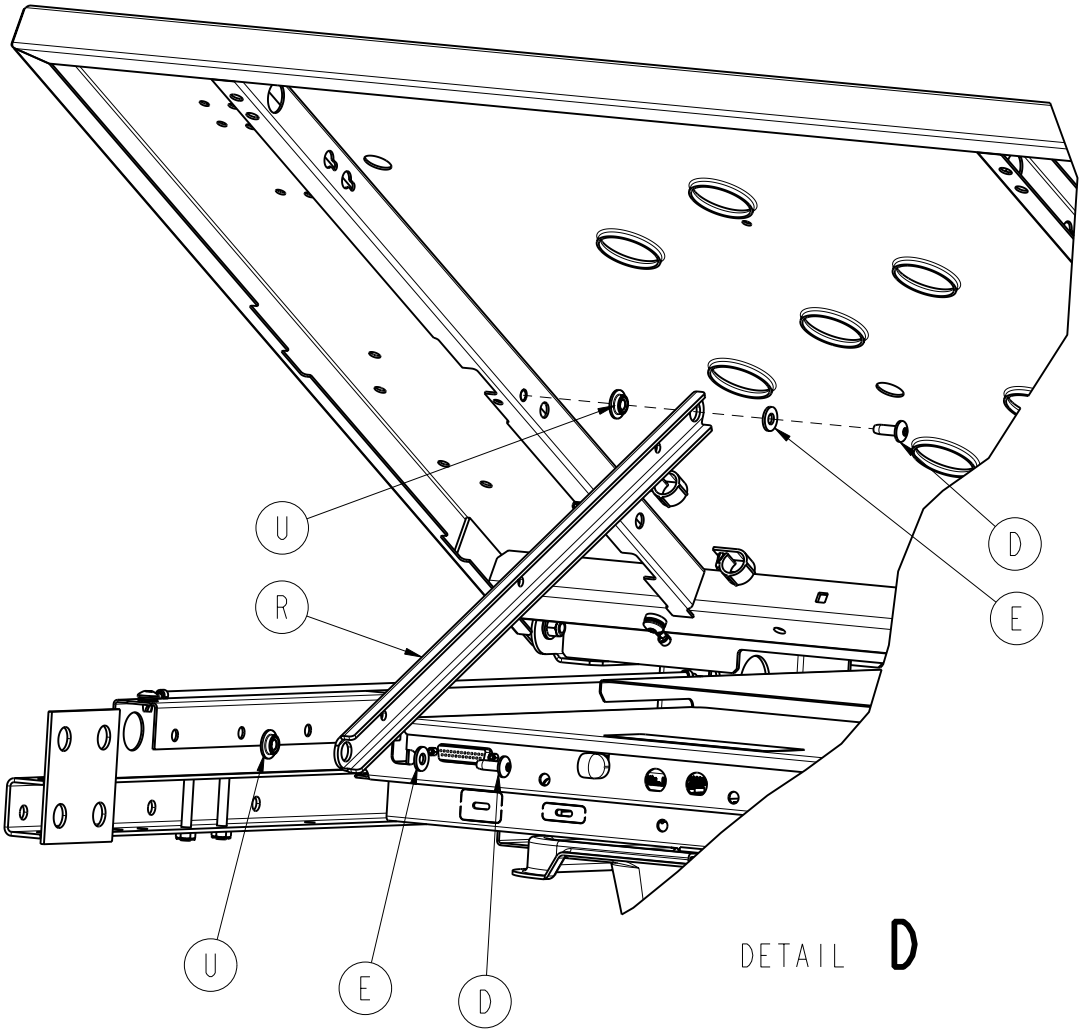

Return To Table of Contents

Litter Assembly, Battery Backup, *i*Bed® Wireless

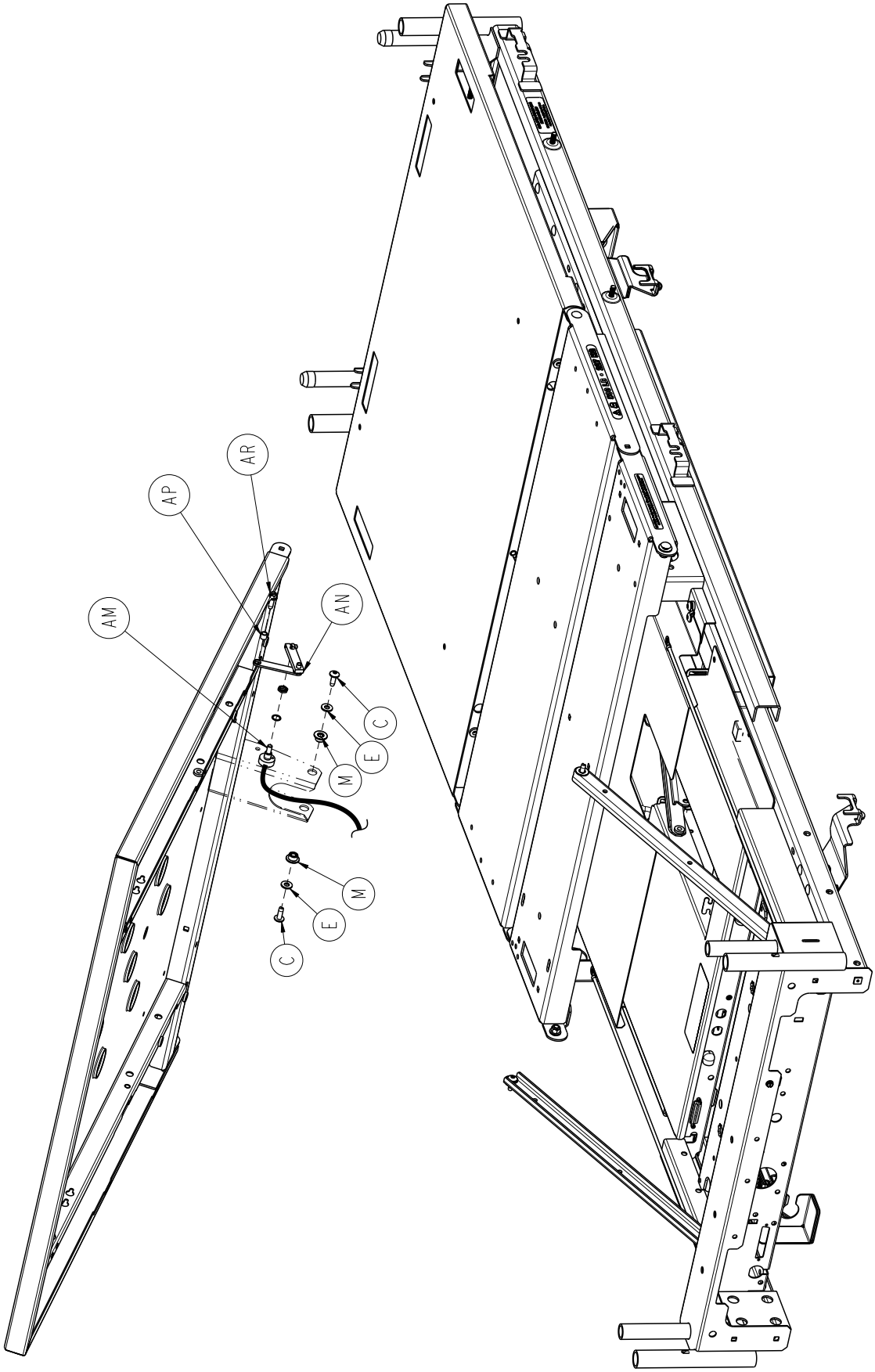

Return To Table of Contents

Litter Assembly, Battery Backup, *i*Bed® Wireless

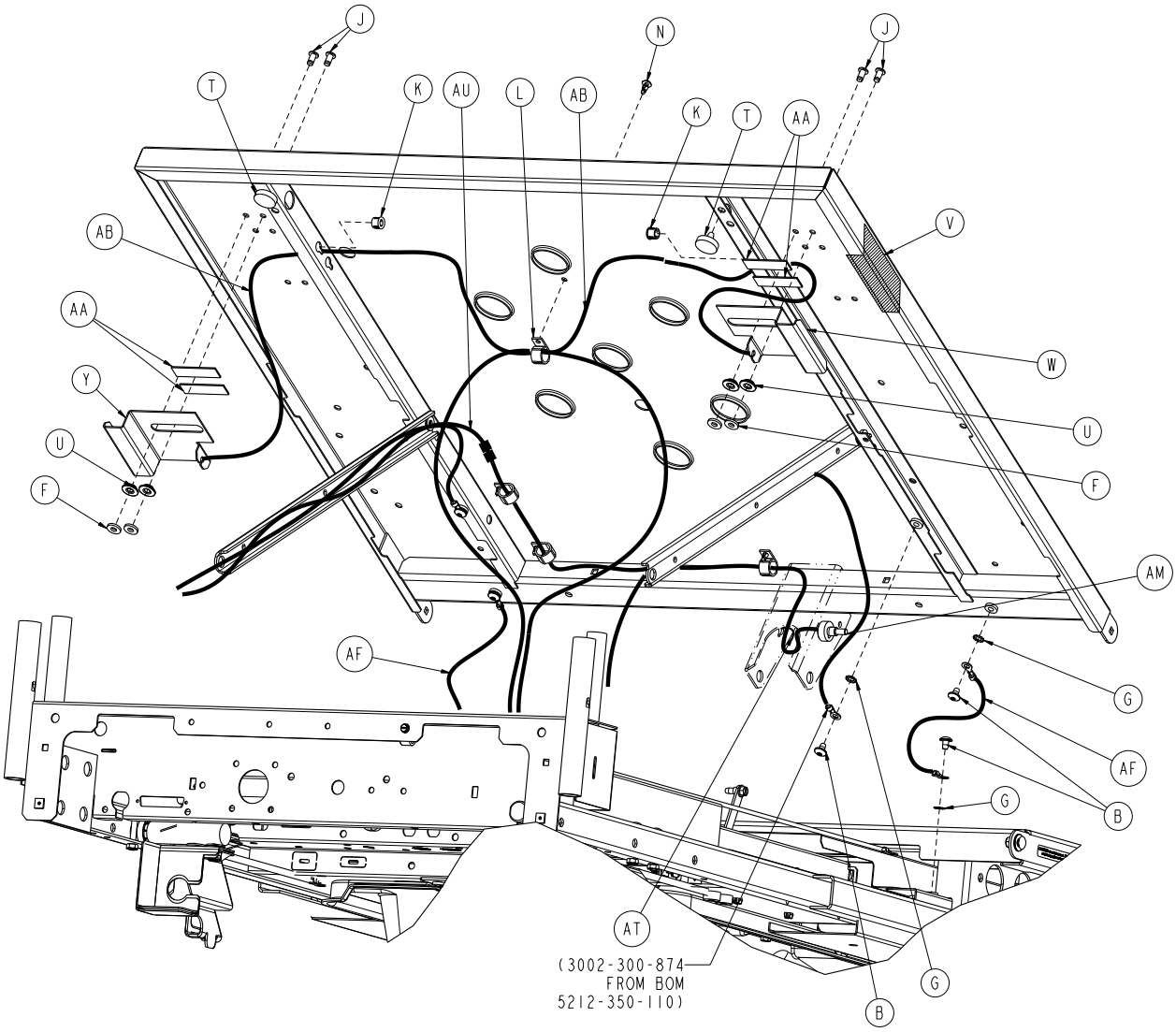

Return To Table of Contents

Litter Assembly, Battery Backup, *i*Bed® Wireless Option - 5212-350-200 - (Reference Only)

item	Part No.	Part Name	Qty.
A	0005-017-000	Carriage Bolt	4
B	0007-053-000	Truss Head Screw	6
C	0007-063-000	Truss Head Screw	2
D	0007-065-000	Truss Head Screw	5
E	0011-077-000	Washer	10
F	0011-376-000	Washer	4
G	0013-010-000	1/4” External Tooth Lock Washer	11
H	0016-028-000	Fiberlock Hex Nut	4
J	0025-120-000	Pop Rivet	4
K	0030-052-000	Heyco Snap Bushing	2
L	0059-743-000	Wire Harness Clip	4
M	3000-300-099	Bushing-Fowler Modified	2
N	3000-300-477	CPR Conduit Stud	1
P	3001-200-229	Mounting Standoff	2
R	3006-301-005	Fowler Link	2
T	3001-300-008	Bumper	2
U	3001-300-099	Fowler Modified Bushing	10
V	3006-300-603	Label, CPR Release	2
W	3001-300-661	CPR Handle, Right	1
Y	3001-300-662	CPR Handle, Left	1
AA	3001-300-663	Velcro® Strip	4
AB	3001-300-670	CPR Cable Assembly	2
AC	3002-300-083	Motion Interrupt Pan	1
AD	3006-300-145	Weldment, Fowler Litter	1
AE	3006-300-602	Bl. Stn. Label, Fowler Elev. Angle	1
AF	3002-300-870	8” Litter Ground Jumper	2
AG	5212-350-110	Assembly, Electrical Litter, Battery Backup, *i*Bed Wireless	1
AH	3006-300-002	Litter Assembly, Std. Components	1
AJ	3006-300-042	Foot Cover Assembly	1
AK	3006-300-190	Foot Litter Weldment	1
AL	3006-300-349	Cap	2
AM	3001-345-807	Cable, Fowler Pot	1
AN	3004-345-450	Pot Linkage Assembly	1
AP	3001-400-558	Spacer	1
AR	0003-226-000	Hex Washer Head Screw	1
AT	3000-300-113	8” Cable Tie	1
AU	3001-345-809	Cable, Fowler Pot Extension (KCl)	1

Return To Table of Contents

Litter Assembly, Zoom® Option

For Reference Only: 3006-344-002

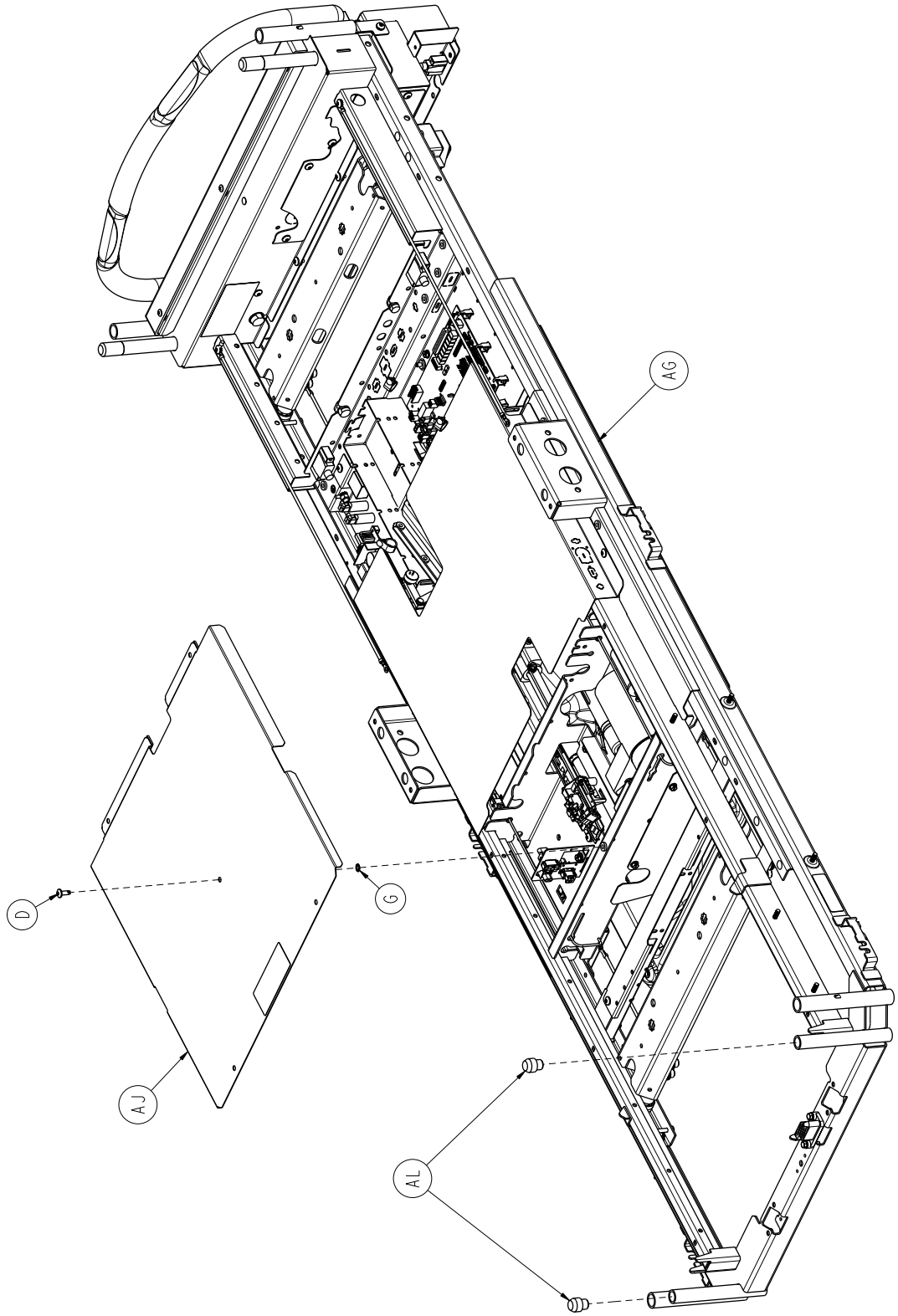

Return To Table of Contents

Litter Assembly, Zoom® Option

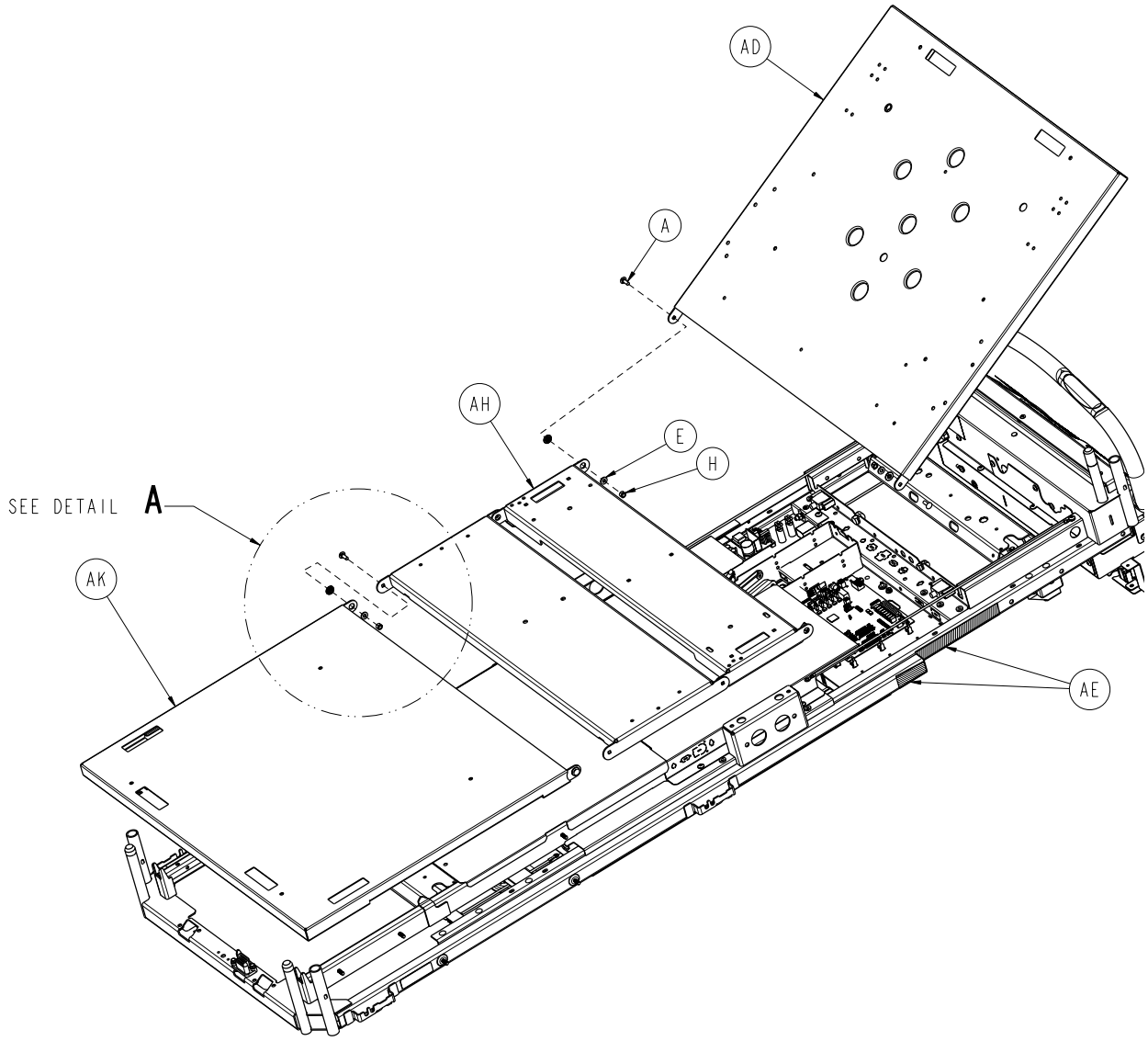

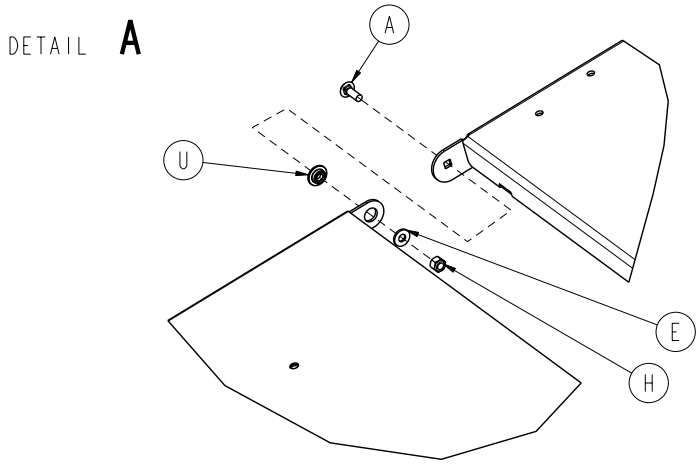

Return To Table of Contents

Litter Assembly, Zoom® Option

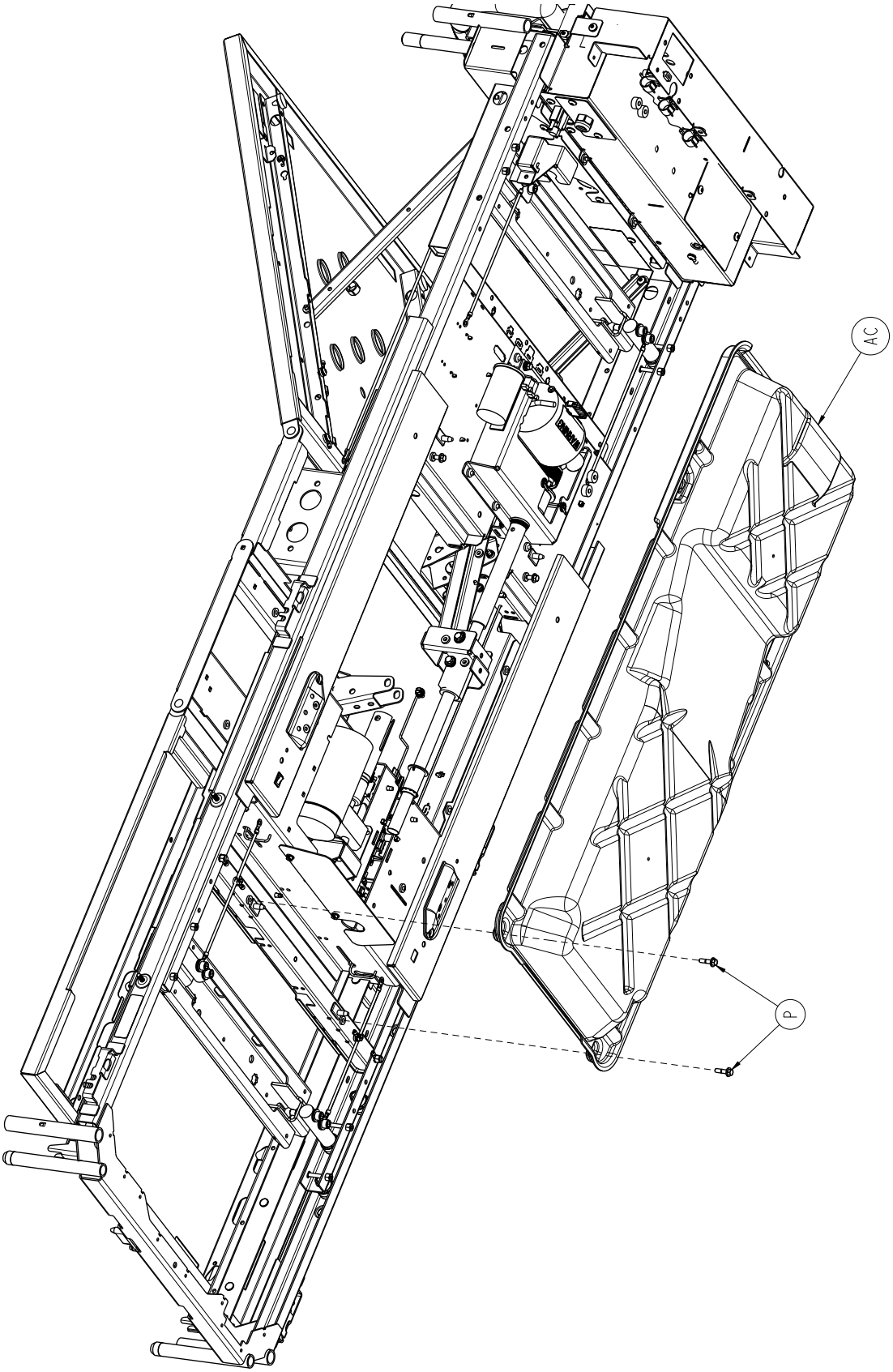

Return To Table of Contents

Litter Assembly, Zoom® Option

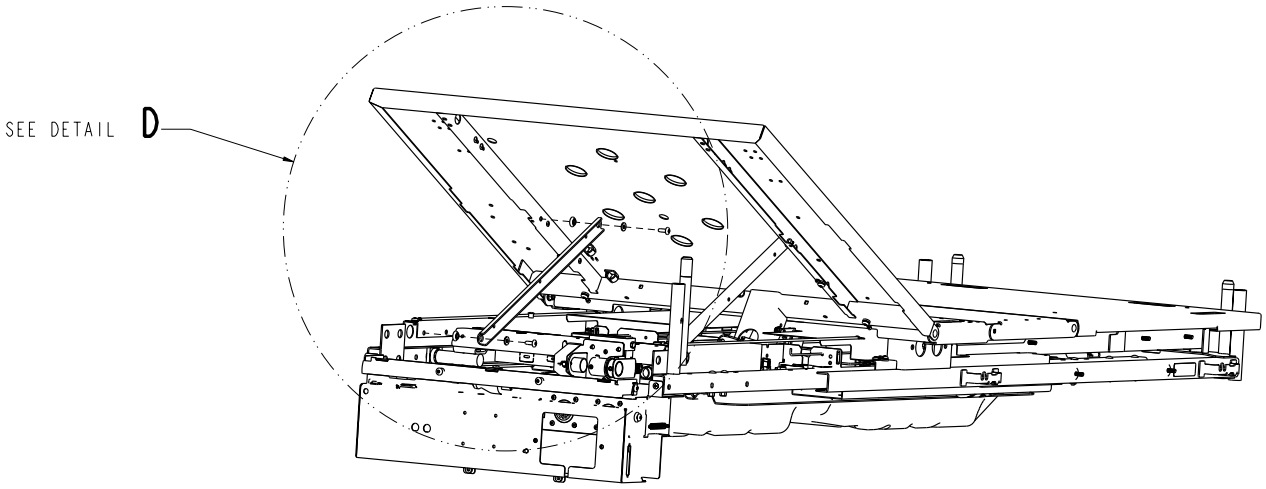

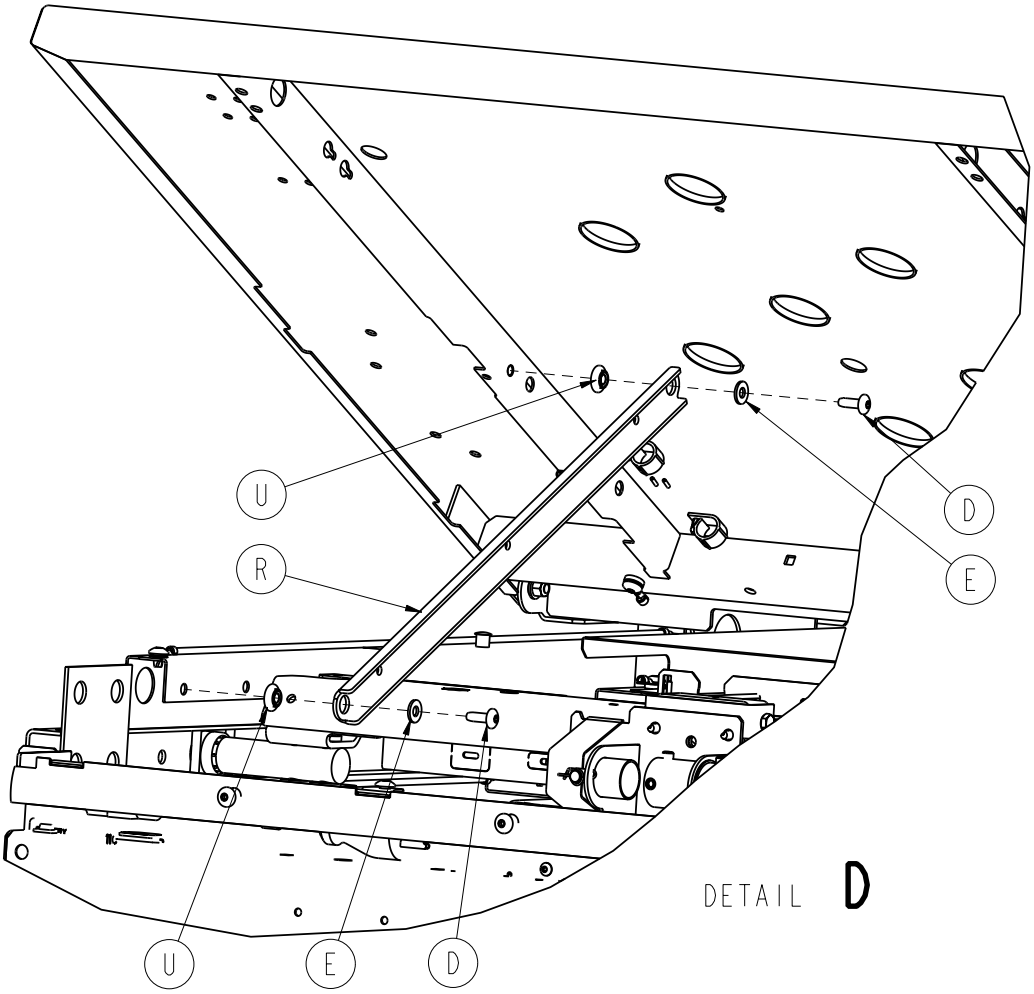

Return To Table of Contents

Litter Assembly, Zoom® Option

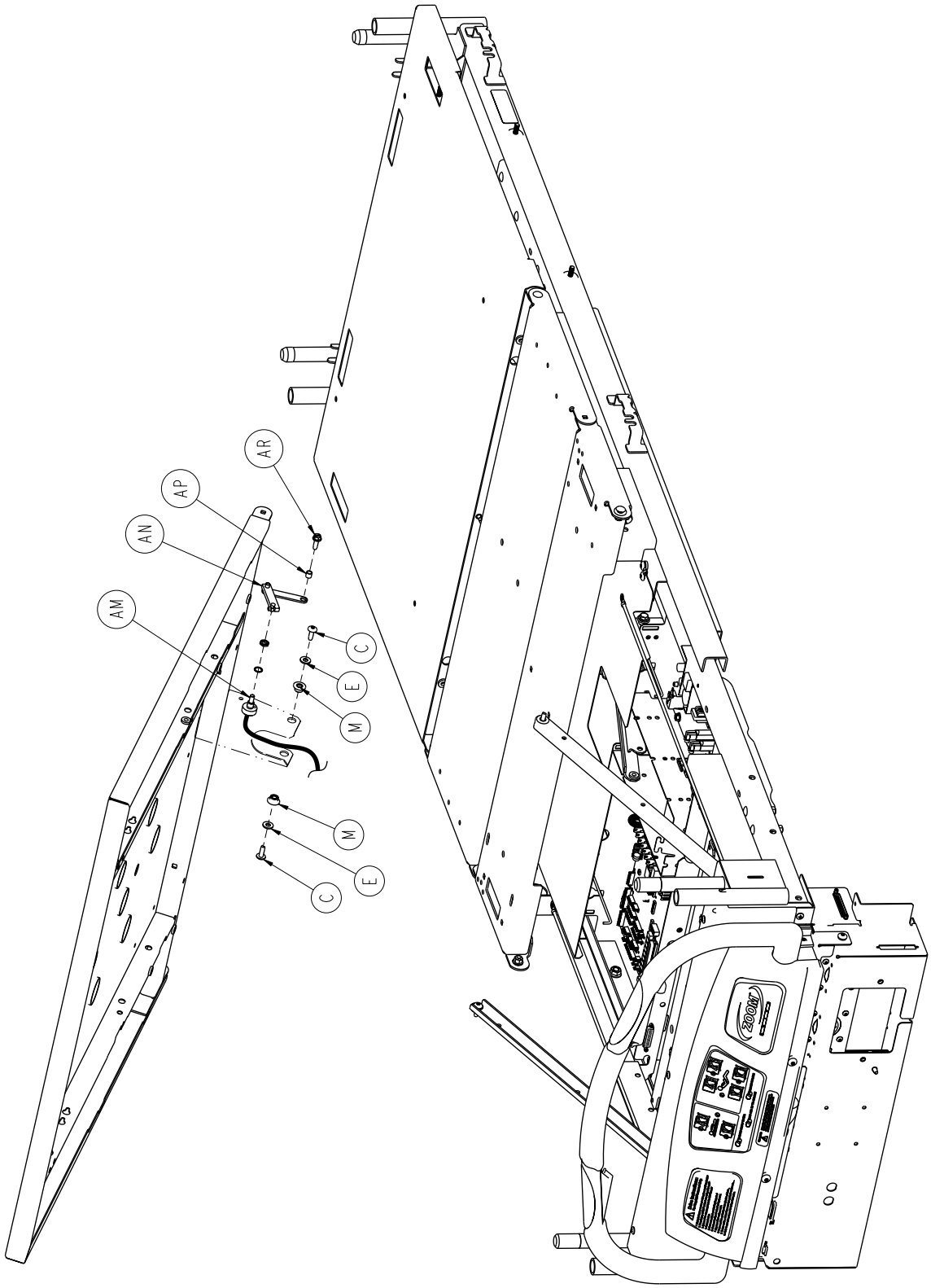

Return To Table of Contents

Litter Assembly, Zoom® Option

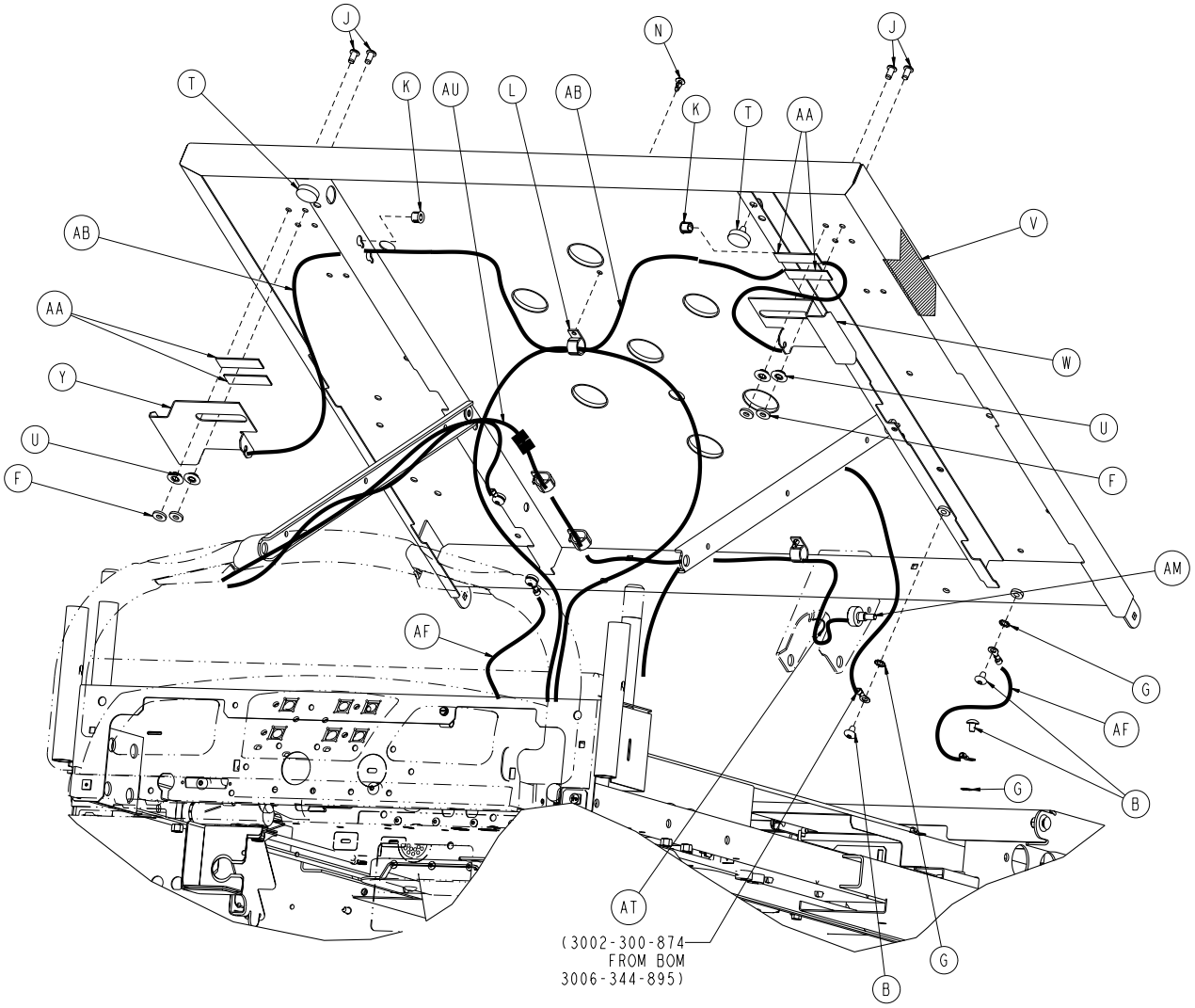

Return To Table of Contents

Litter Assembly, Zoom® Option

Litter Assembly, Zoom® Option 3006-344-002 (reference only)

Item	Part No.	Part Name	Qty.
A	0005-017-000	Carriage Bolt	4
B	0007-053-000	Truss Head Screw	6
C	0007-063-000	Truss Head Screw	2
D	0007-065-000	Truss Head Screw	5
E	0011-077-000	Washer	10
F	0011-376-000	Washer	4
G	0013-010-000	External Tooth Lock Washer	11
H	0016-028-000	Fiberlock Hex Nut	4
J	0025-120-000	Pop Rivet	4
K	0030-052-000	Heyco Snap Bushing	2
L	0059-743-000	Wire Harness Clip	4
M	3000-300-099	Fowler Modified Bushing	2
N	3000-300-477	CPR Conduit Stud	1
P	3001-200-229	Mounting Standoff	2
R	3006-301-005	Fowler Link	2
T	3001-300-008	Bumper	2
U	3001-300-099	Fowler Modified Bushing	10
V	3006-300-603	CPR Release Label	2
W	3001-300-661	CPR Handle RH	1
Y	3001-300-662	CPR Handle LH	1
AA	3001-300-663	Velcro® Strip	4
AB	3001-300-670	CPR Cable Assembly	2
AC	3002-300-083	Motion Interrupt Pan	1
AD	3006-300-145	Fowler Litter Weldment	1
AE	3006-300-602	Fowler Elevation Angle Label	1
AF	3002-300-870	8” Litter Ground Jumper	2
AG	3006-344-895	Zoom® Bed Electrical Assembly	1
AH	3006-300-002	Litter Assembly, Std. Components	1
AJ	3006-300-042	Foot Cover Assembly	1
AK	3006-300-190	Foot Litter Weldment	1
AL	3006-300-349	Foot End Litter Cap	2
AM	3001-345-807	Fowler Pot Label	1
AN	3004-345-450	Pot Linkage Label	1
AP	3001-400-558	Spacer	1
AR	0003-226-000	Hex Washer Head Screw	1
AT	3000-300-113	8” Cable Tie	1
AU	3001-345-809	Fowler Pot Extension Cable (KCI)	1

Return To Table of Contents

For Reference Only: 5212-344-002

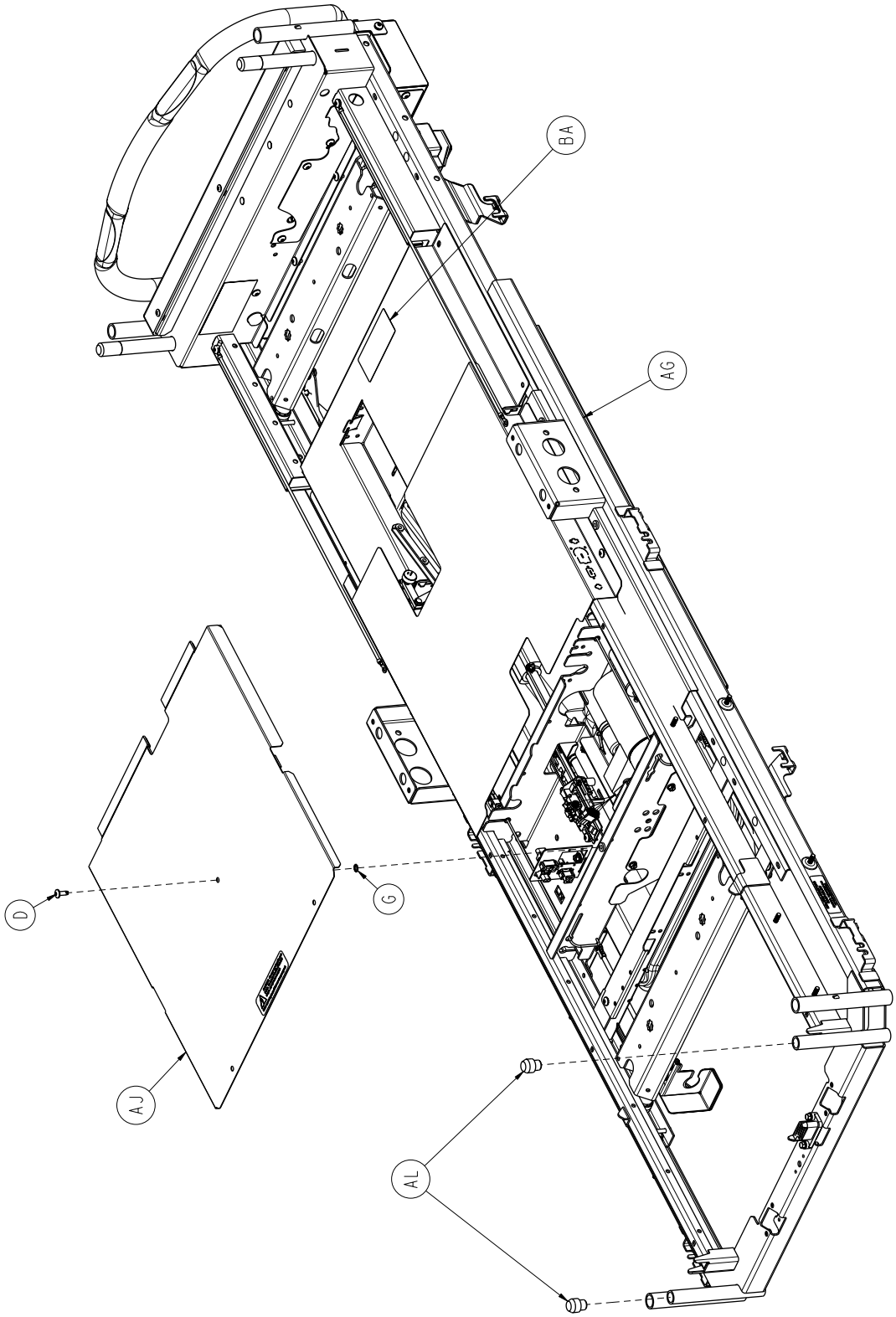

Return To Table of Contents

Litter Assembly, Zoom®, *i*Bed® Wireless

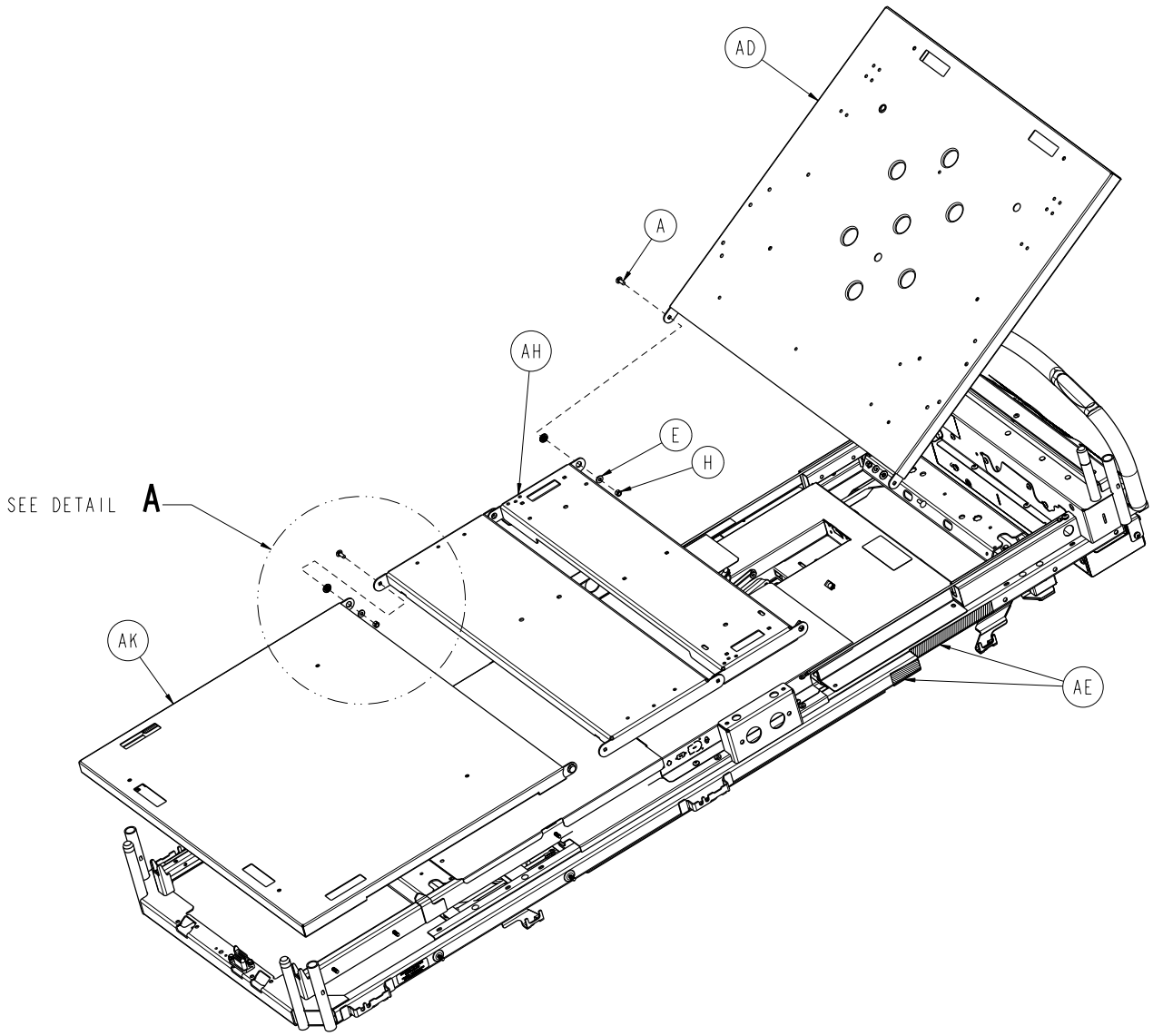

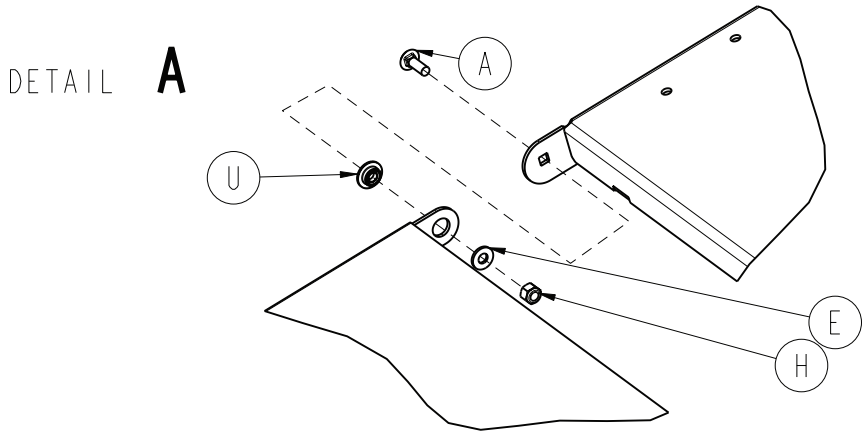

Return To Table of Contents

Litter Assembly, Zoom®, *i*Bed® Wireless

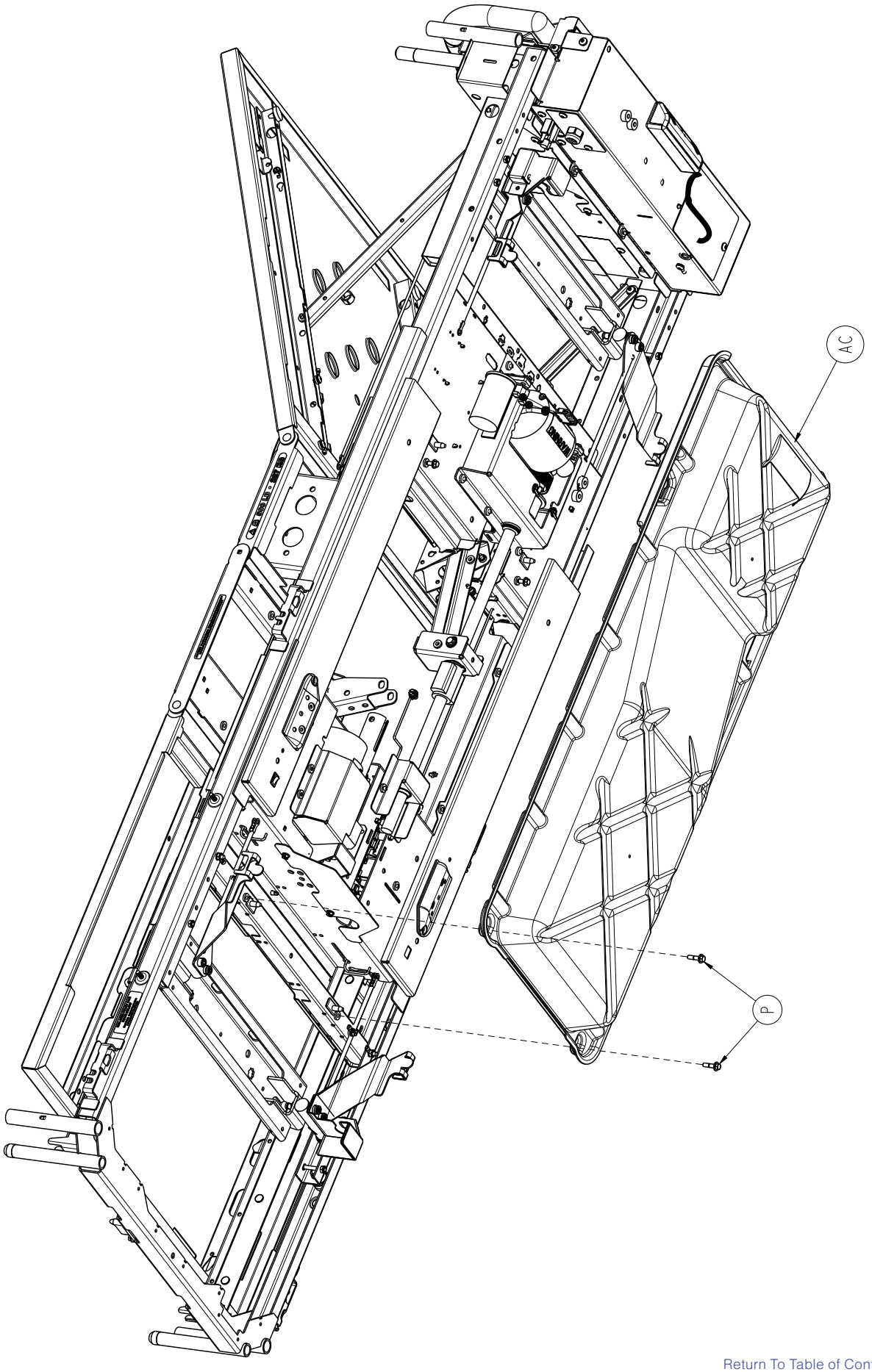

Return To Table of Contents

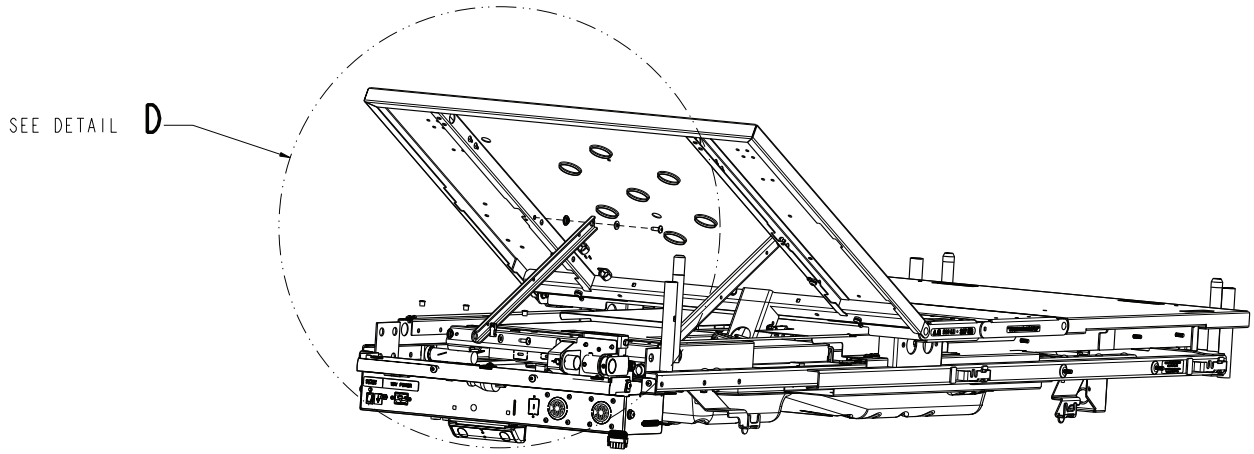

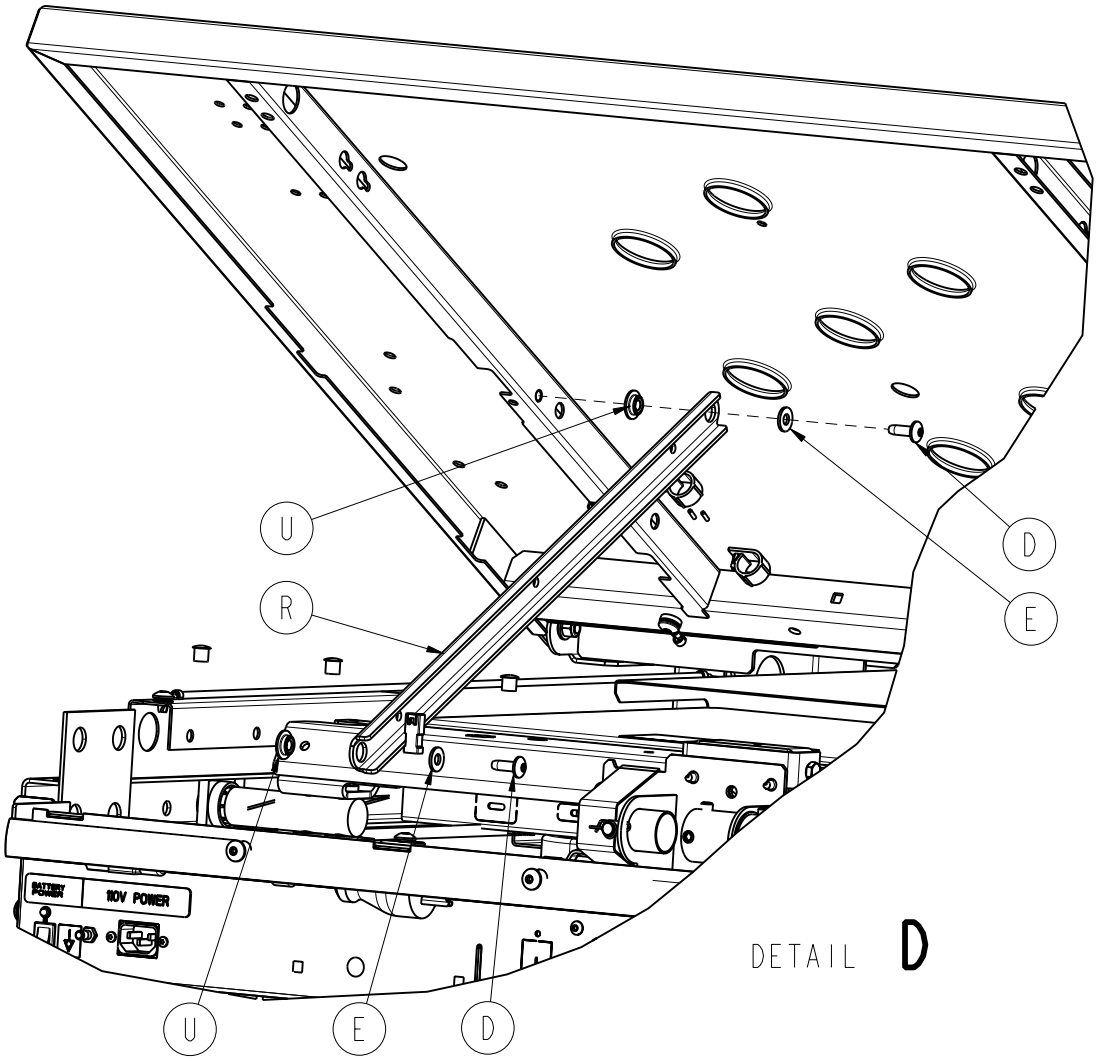

Return To Table of Contents

Litter Assembly, Zoom®, *i*Bed® Wireless

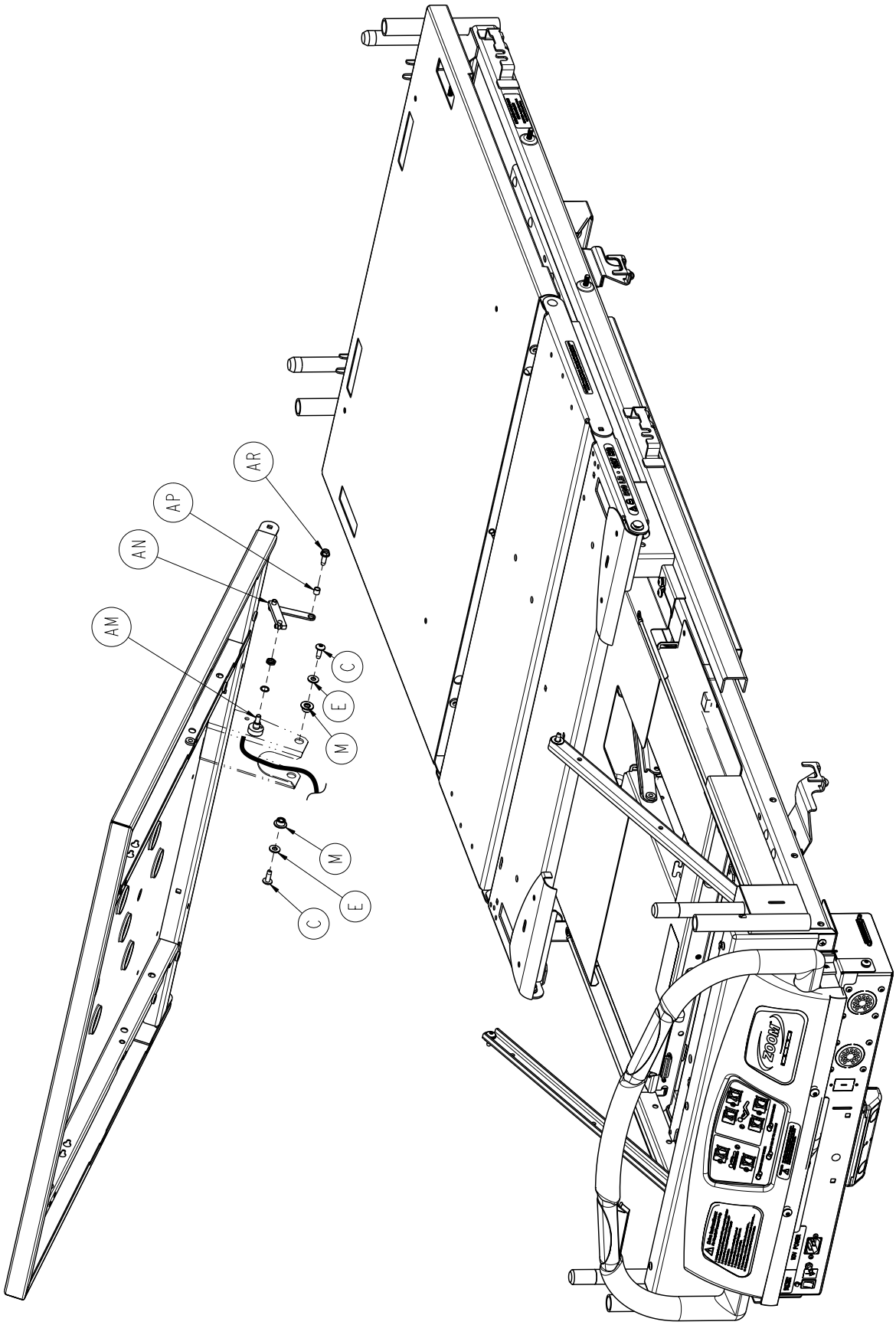

Return To Table of Contents

Litter Assembly, Zoom®, *i*Bed® Wireless

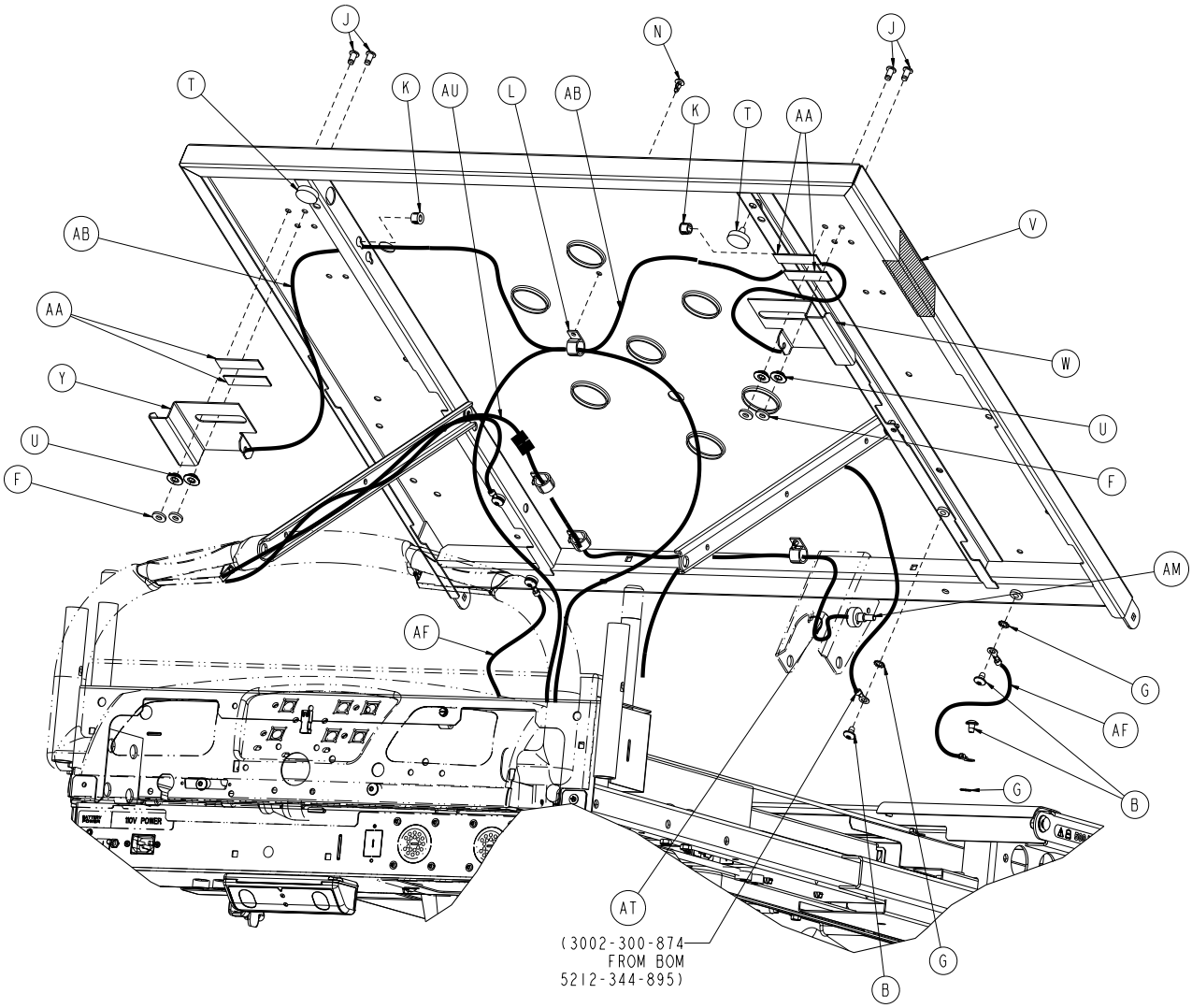

Return To Table of Contents

Litter Assembly, Zoom®, *i*Bed® Wireless - 5212-344-002 - (Reference Only)

item	Part No.	Part Name	Qty.
A	0005-017-000	Carriage Bolt	4
B	0007-053-000	Truss Head Screw	6
C	0007-063-000	Truss Head Screw	2
D	0007-065-000	Truss Head Screw	5
E	0011-077-000	Washer	10
F	0011-376-000	Washer	4
G	0013-010-000	1/4” External Tooth Lock Washer,	11
H	0016-028-000	Fiberlock Hex Nut	4
J	0025-120-000	Pop Rivet	4
K	0030-052-000	Heyco Snap Bushing 2043	2
L	0059-743-000	Wire Harness Clip	4
M	3000-300-099	Bushing-Fowler Modified	2
N	3000-300-477	CPR Conduit Stud	1
P	3001-200-229	Mounting Standoff	2
R	3006-301-005	Fowler Link	2
T	3001-300-008	Bumper	2
U	3001-300-099	Fowler Modified Bushing	10
V	3006-300-603	Label, CPR Release	2
W	3001-300-661	CPR Handle, Right	1
Y	3001-300-662	CPR Handle, Left	1
AA	3001-300-663	Velcro® Strip	4
AB	3001-300-670	CPR Cable Assembly	2
AC	3002-300-083	Motion Interrupt Pan	1
AD	3006-300-145	Weldment, Fowler Litter	1
AE	3006-300-602	Label-Fowler Elevation Angle	1
AF	3002-300-870	8” Litter Ground Jumper	2
AG	5212-344-895	Assembly, Electrical Litter, Zoom®, *i*Bed Wireless	1
AH	3006-300-002	Litter Assy. Std. Components	1
AJ	3006-300-042	Foot Cover Assembly	1
AK	3006-300-190	Foot Litter Weldment	1
AL	3006-300-349	Cap	2
AM	3001-345-807	Fowler Pot Cable	1
AN	3004-345-450	Pot Linkage Assembly	1
AP	3001-400-558	Spacer	1
AR	0003-226-000	Hex Washer Head Screw	1
AT	3000-300-113	8” Cable Tie	1
AU	3001-345-809	Cable, Fowler Pot Extension (KCI)	1

Return To Table of Contents

Foot Prop Assembly

3003-034-010

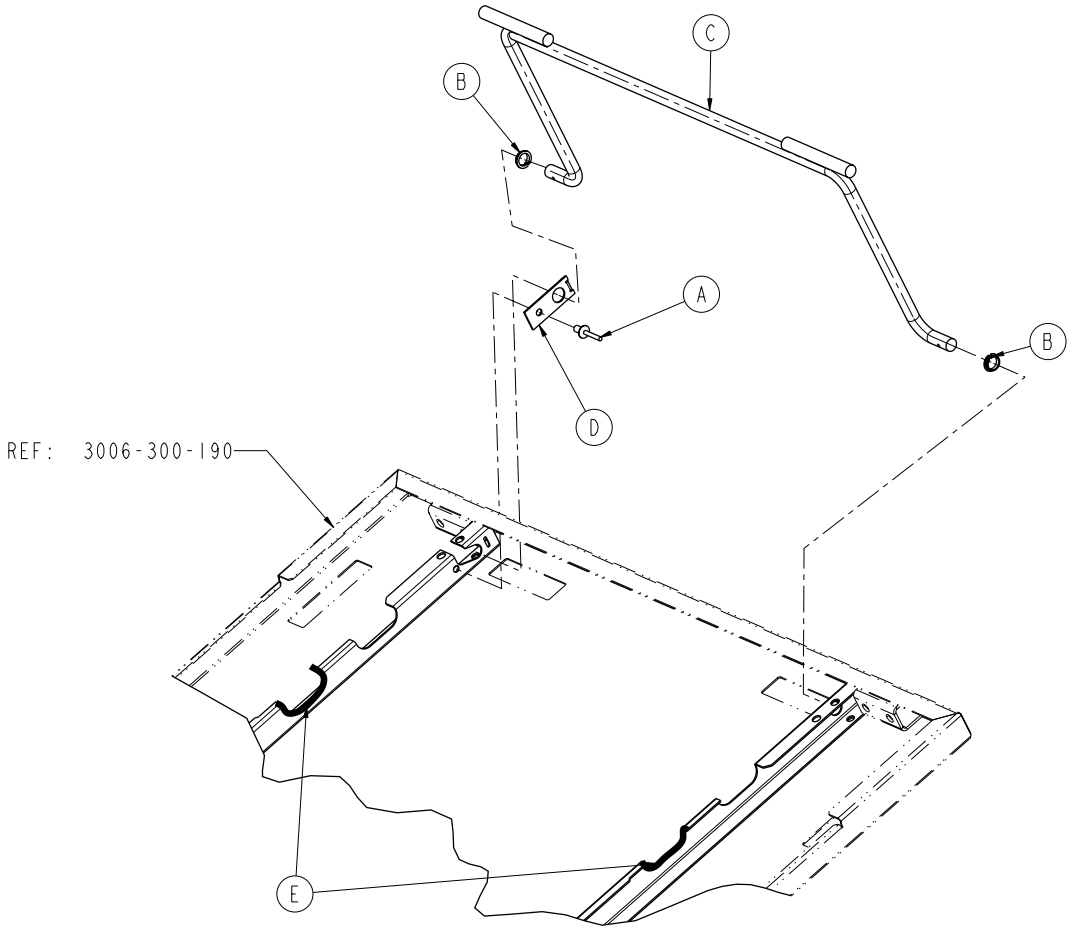

Item	Part No.	Part Name	Qty.
A	0025-177-000	Dome Head Rivet	1
B	0052-754-000	Nyliner Bearing	2
C	3006-300-160	Foot Prop Rod Weldment	1
D	3006-300-186	Prop Rod Retainer	1
E	0058-056-000	1/8” Edge Cover with Adhesive	3.0”

Return To Table of Contents

Litter CPU Cover Assembly

3006-301-097

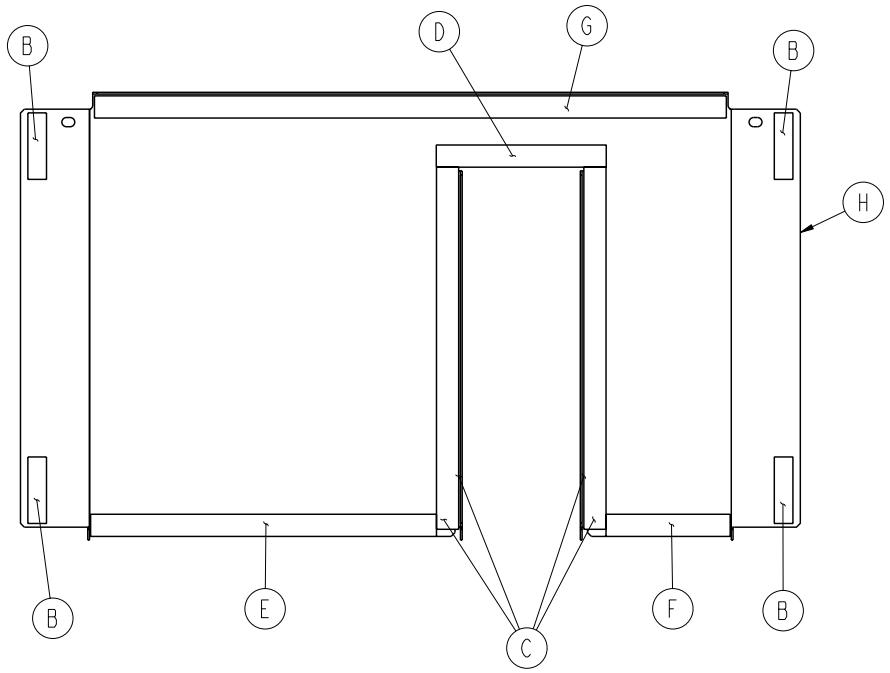

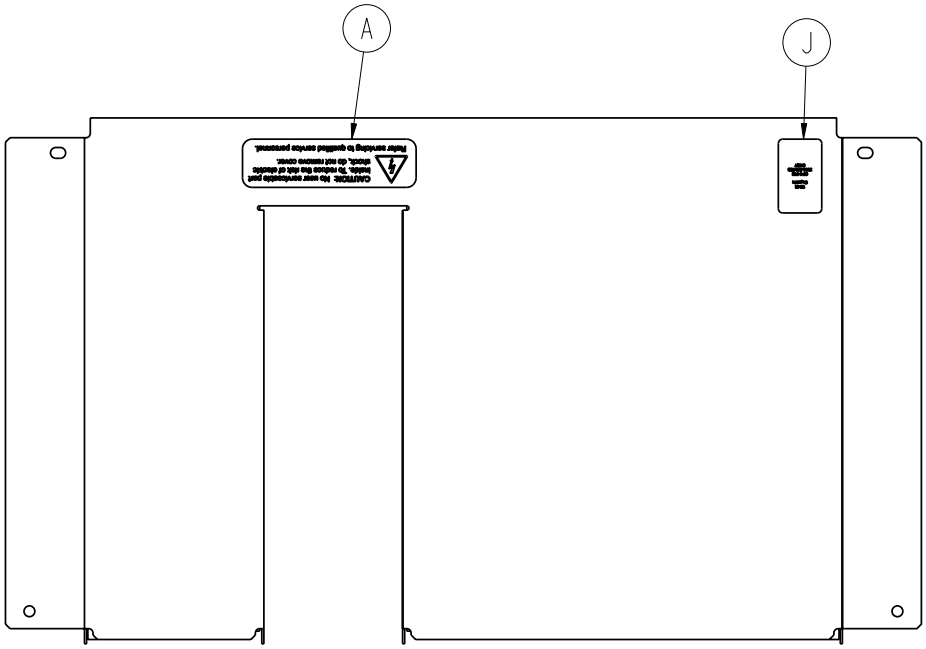

Item	Part No.	Part Name	Qty.
A	3006-002-708	Label, Shock Hazard	1
B	3001-300-663	Velcro® Strip	4
C	7900-001-291	Foam Tape (12.25”)	4
D	7900-001-291	Foam Tape (5.75”)	1
E	7900-001-291	Foam Tape (11.75”)	1
F	7900-001-291	Foam Tape (4.25”)	1
G	7900-001-291	Foam Tape (21.38”)	1
H	3006-300-098	CPU Cover	1
J	3006-508-105	Label, WiFi Capable	1

Return To Table of Contents

Foot Cover Assembly - 3003-300-042

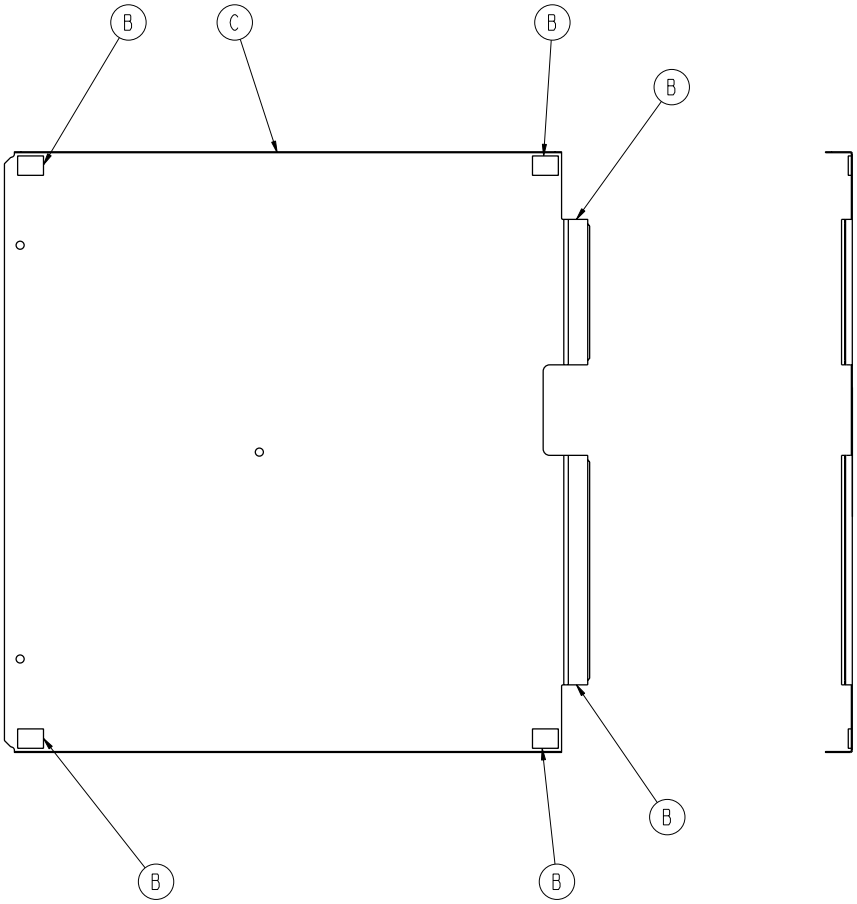

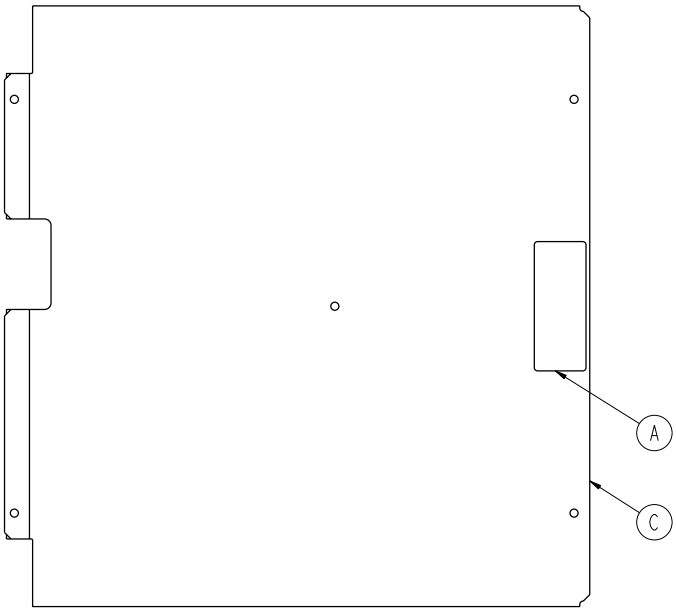

Item	Part No.	Part Name	Qty.
A	0988-002-708	Caution Label	1
B	7900-001-291	Foam Tape	1.5’
C	3003-300-043	Foot Cover	1

Return To Table of Contents

Electrical Litter Assembly, Standard Bed

For Reference Only: 3006-343-895

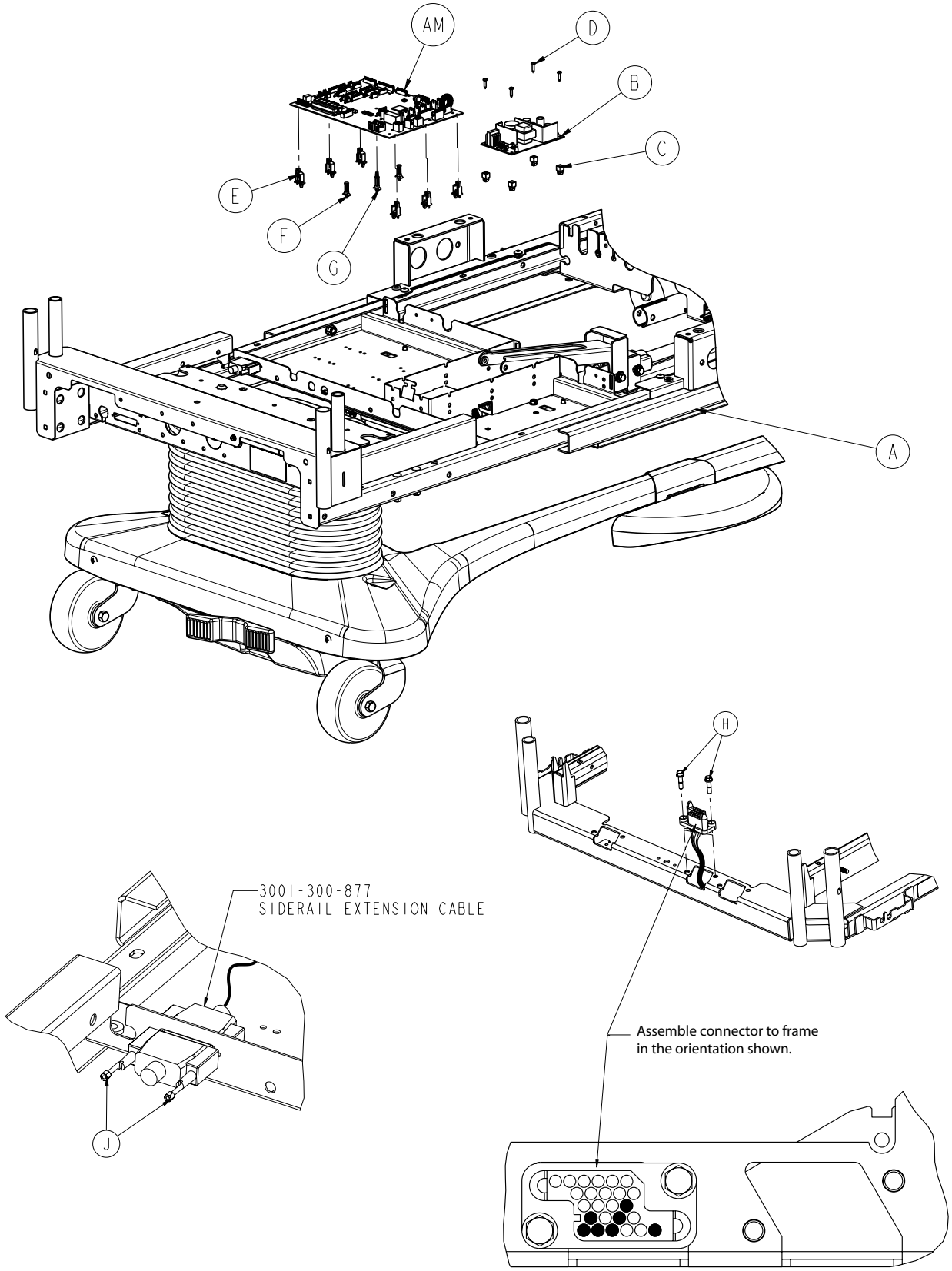

Return To Table of Contents

Electrical Litter Assembly, Standard Bed

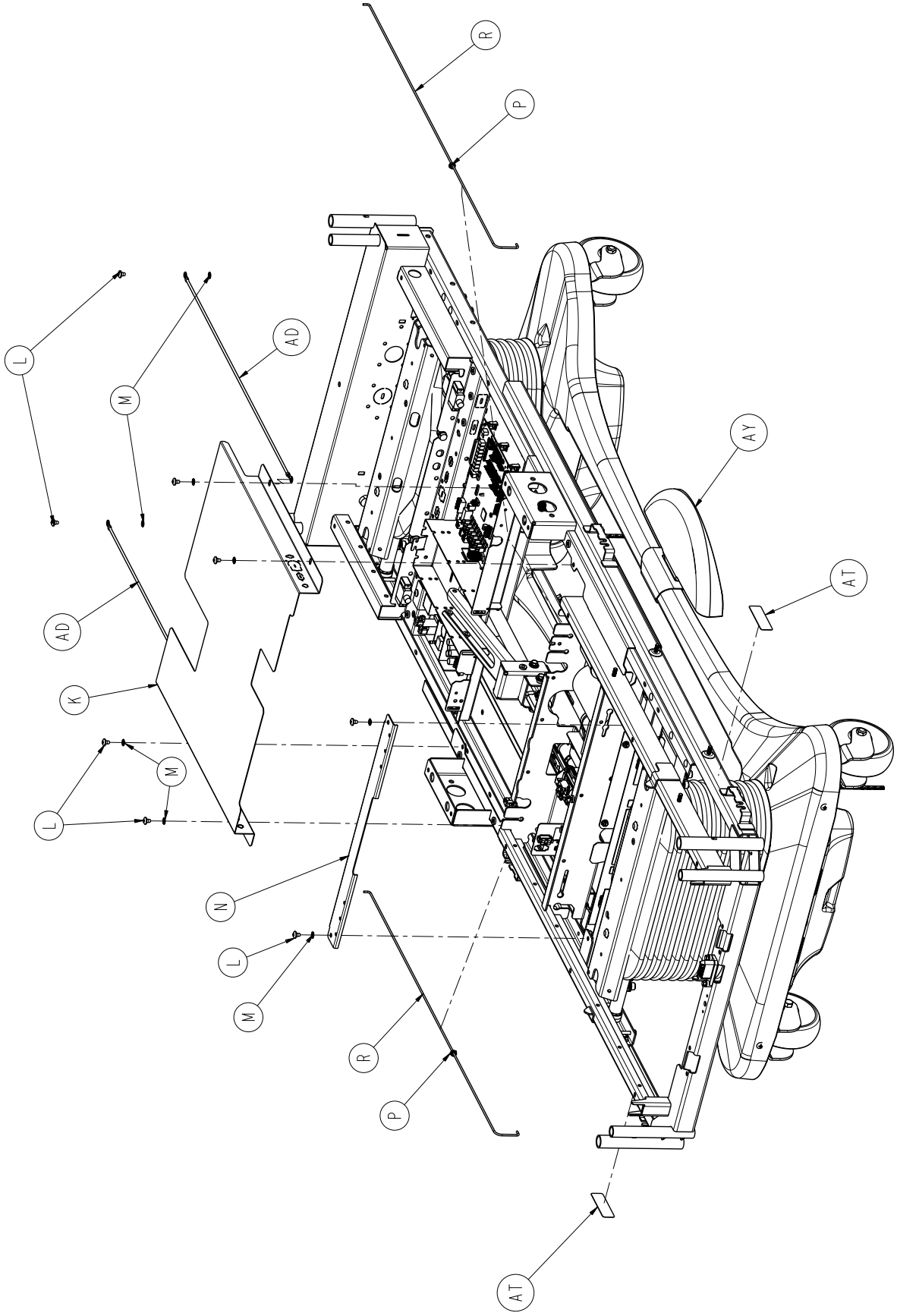

Return To Table of Contents

Electrical Litter Assembly, Standard Bed

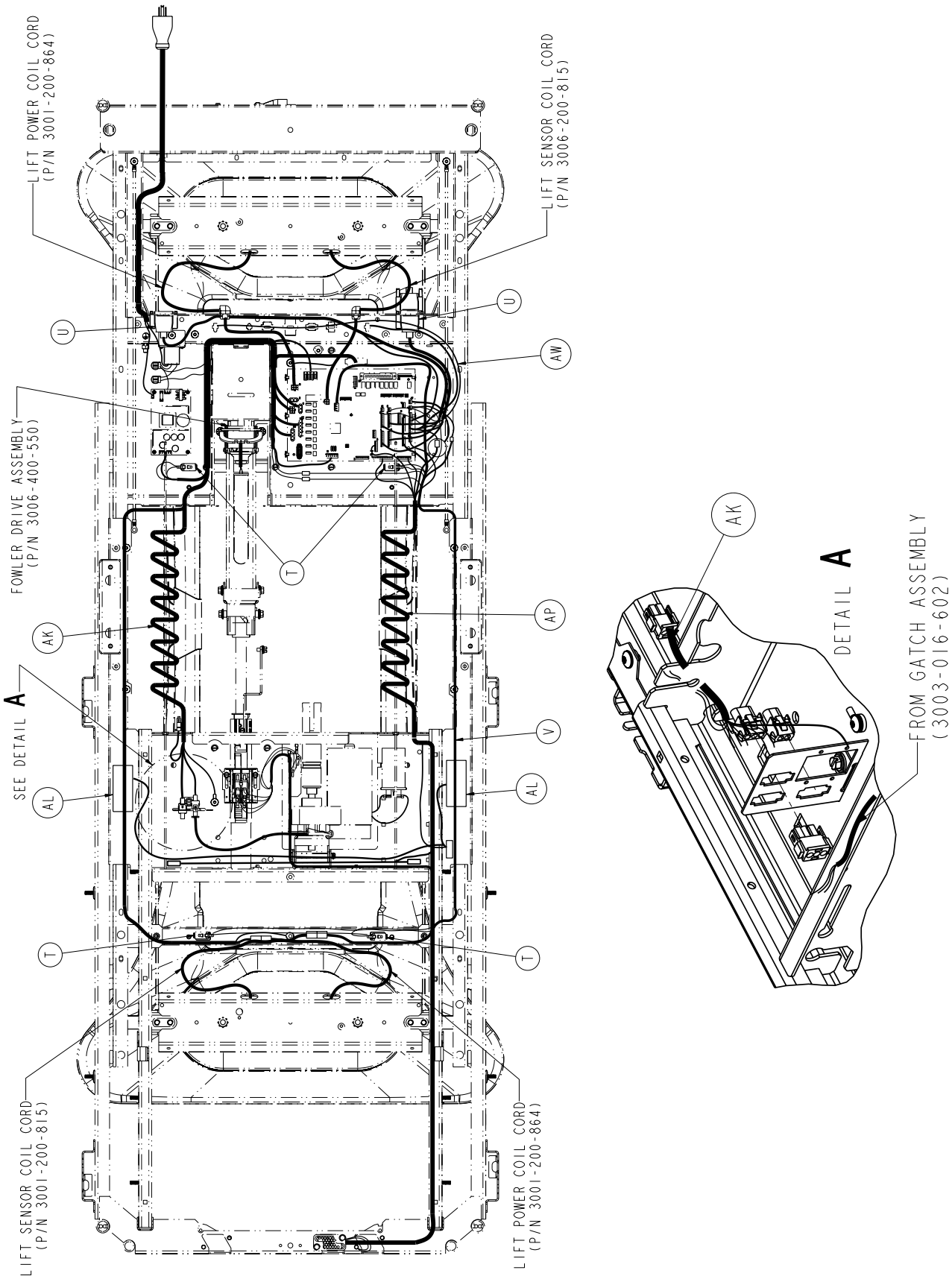

Return To Table of Contents

Electrical Litter Assembly, Standard Bed

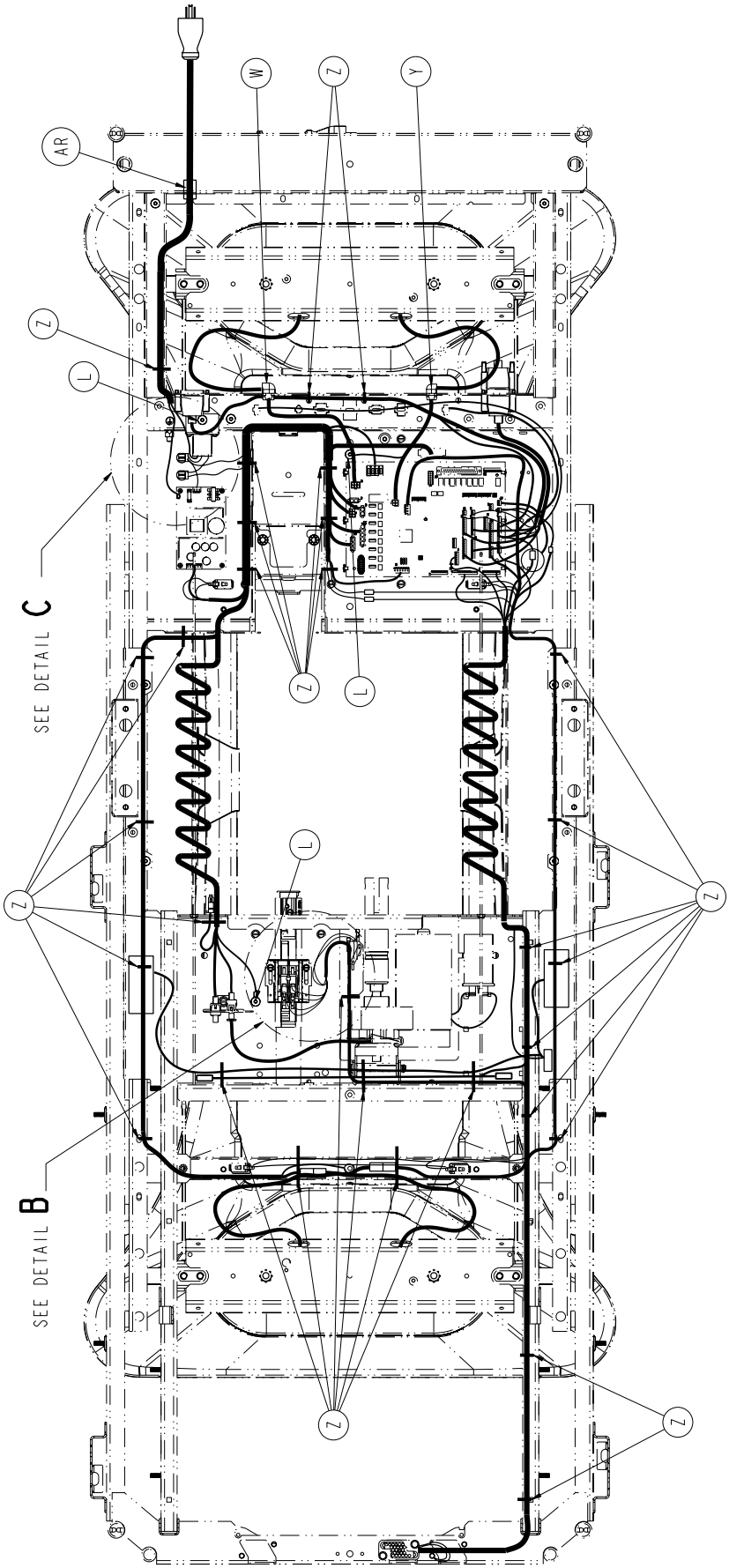

Return To Table of Contents

DETAIL C

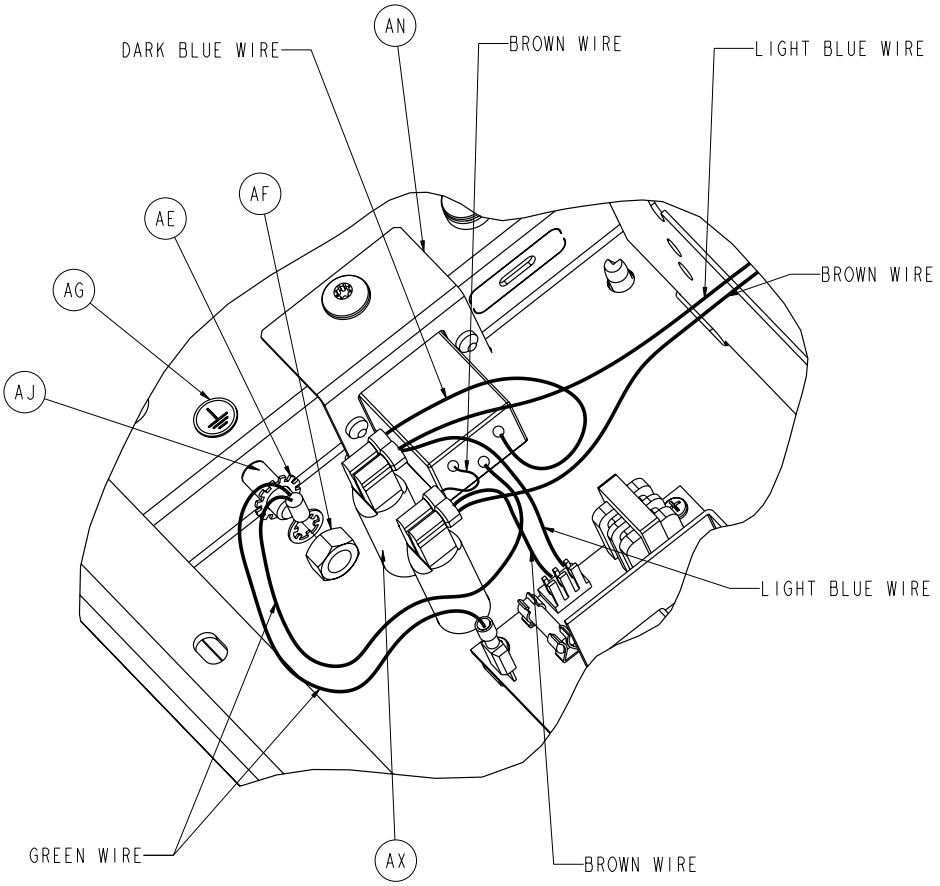

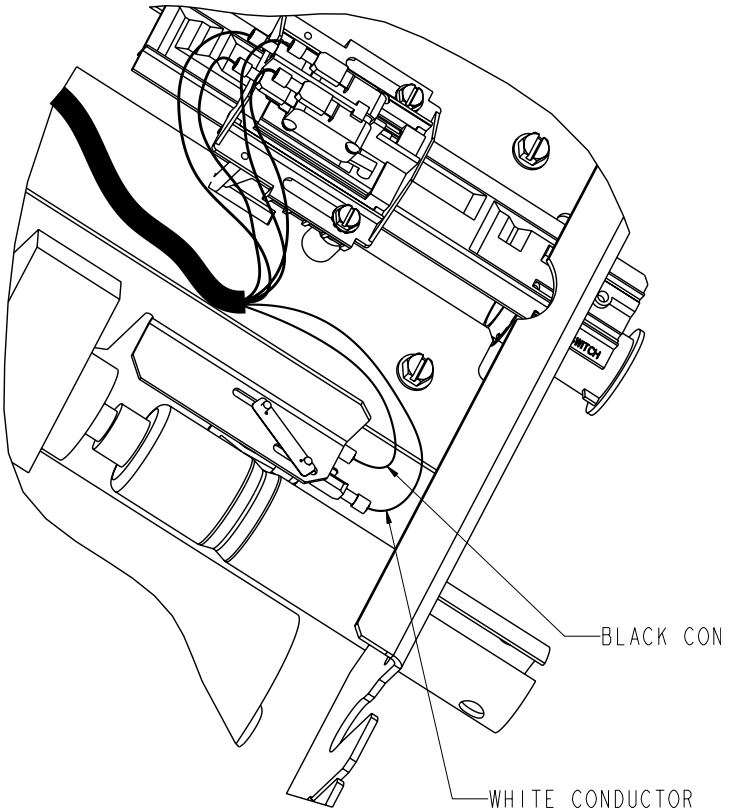

DETAIL B

Return To Table of Contents

Electrical Litter Assembly, Standard Bed

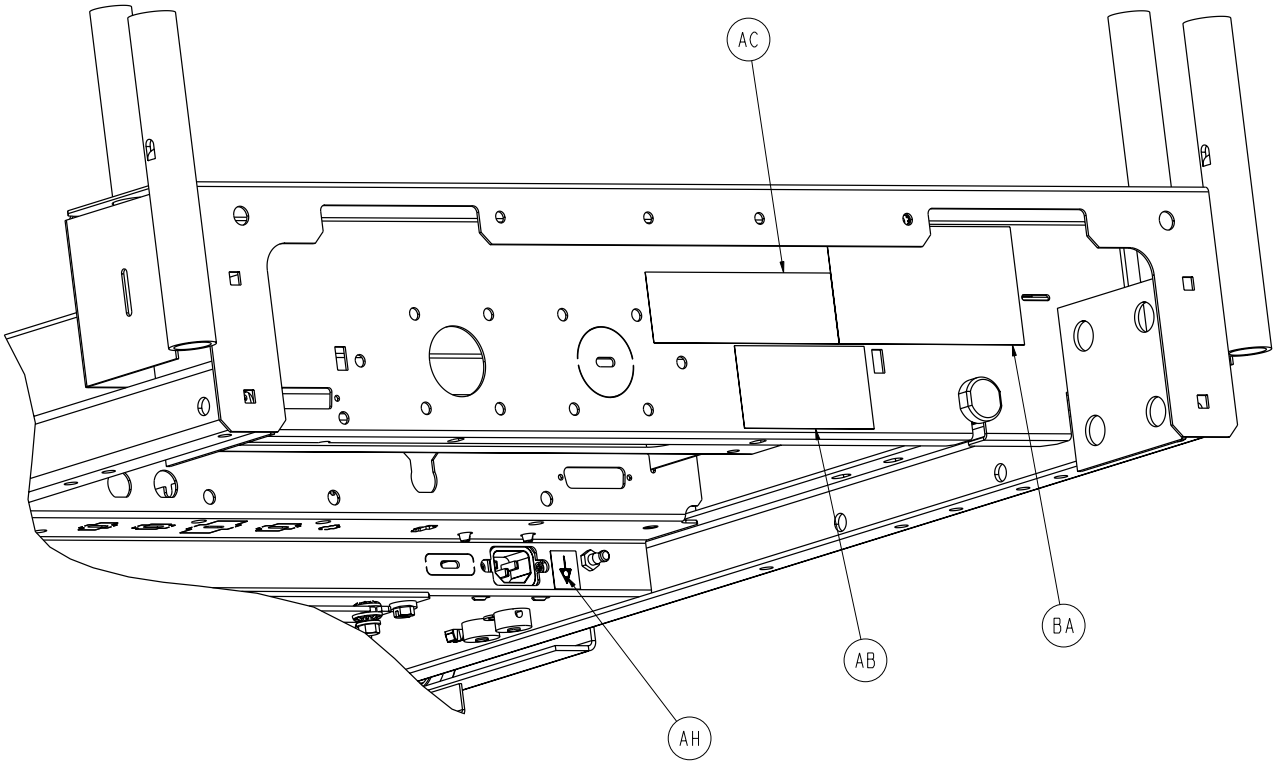

Return To Table of Contents

Electrical Litter Assembly - Common Components 3006-343-895 (Reference Only)

Item	Part No.	Part Name	Qty.
A	3006-300-197	Mechanical Litter Assembly	1
B	0059-157-000	Power Supply	1
C	0052-287-000	Grommet	4
D	0023-138-000	Pan Head Screw	4
E	0059-745-000	Board Mount	6
F	0059-773-000	Push Spacer	2
G	0059-774-000	Locking Circuit Board Support	1
H	3001-200-228	Mounting StandOff	2
J	3001-300-007	Screw	4
K	3006-300-088	Mid Litter Cover Assembly	1
L	0007-053-000	Truss Head Torx Screw	13
M	0013-010-000	External Tooth Lock Washer	6
N	3001-300-023	Cross Support Cover	1
P	0052-822-000	Nyliner Bearing	3
R	3001-300-011	Guide Rod	3
T	3000-300-058	Switch Plunger	4
U	3001-300-877	Siderail Extension Cable	1
V	3001-300-865	Motion Interrupt Lift Sensor Cable	1
W	0030-048-000	Strain Relief	1
Y	0030-047-000	Strain Relief	1
Z	3000-300-113	Cable Tie	34
AB	2011-001-104	Danger Label	1
AC	1550-090-001	Hospital Grade Plug Label	1
AD	3002-300-874	Litter Ground Jumper	2
AE	0013-038-000	Washer	1
AF	0016-033-000	Kep Nut	1
AG	0036-046-000	Ground Label	1
AH	0036-115-000	Ground Label	1
AJ	2011-001-215	Grounding Lug	1
AK	3002-300-861	Power Harness	1
AL	3006-410-020	Night light Option	1
AM	3006-308-900	CPU Board	1
AN	3006-300-881	Power Inlet Cable	1
AP	3006-300-808	Siderail Coil Cord	1
AR	0030-027-000	Strain Relief Bushing	1
AT	3006-300-601	Foley Bag Hook Label	2
AW	3003-300-803	CPU to Siderail Sensor Cable	1
AX	0059-400-000	8 AMP Circuit Breaker	2
AY	3006-200-003	Base Assembly	1
BA	3006-300-625	115V Specification Label	1

Return To Table of Contents

Electrical Litter Assembly, Battery Backup, *i*Bed® Wireless Option

For Reference Only: 5212-350-110

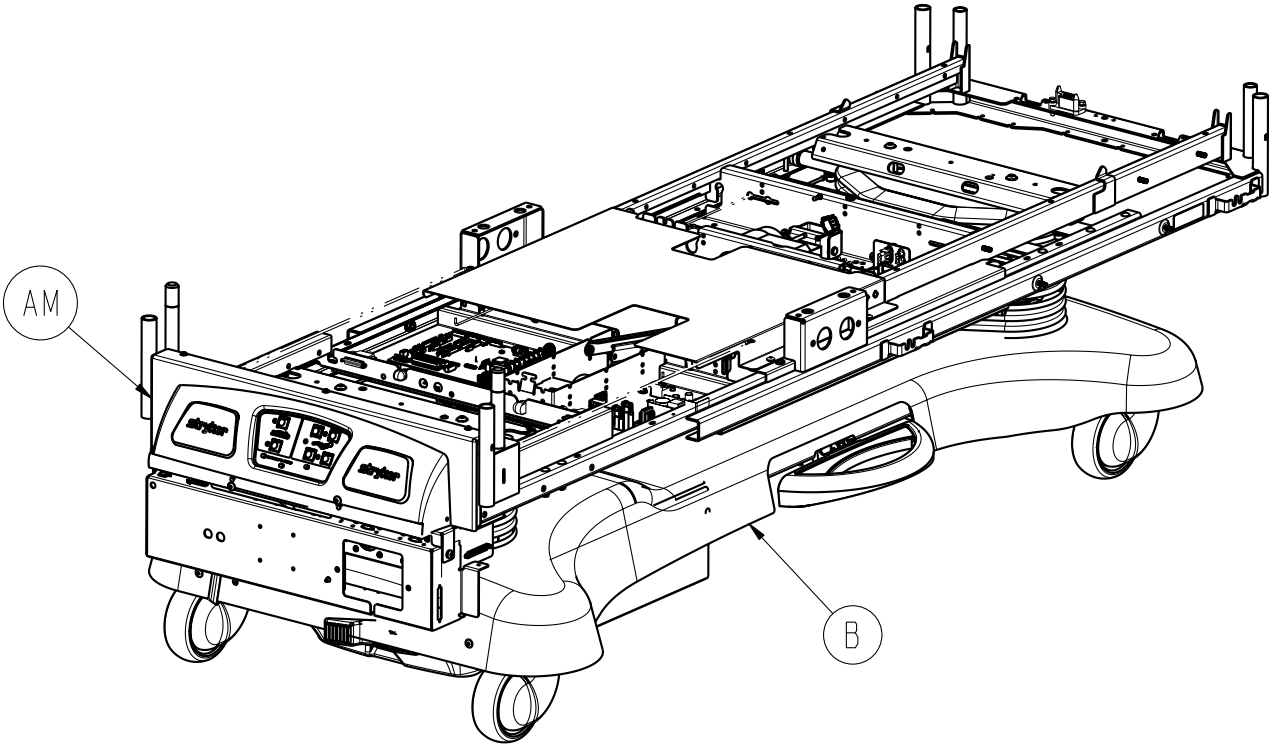

Return To Table of Contents

Electrical Litter Assembly, Battery Backup, *i*Bed® Wireless Option

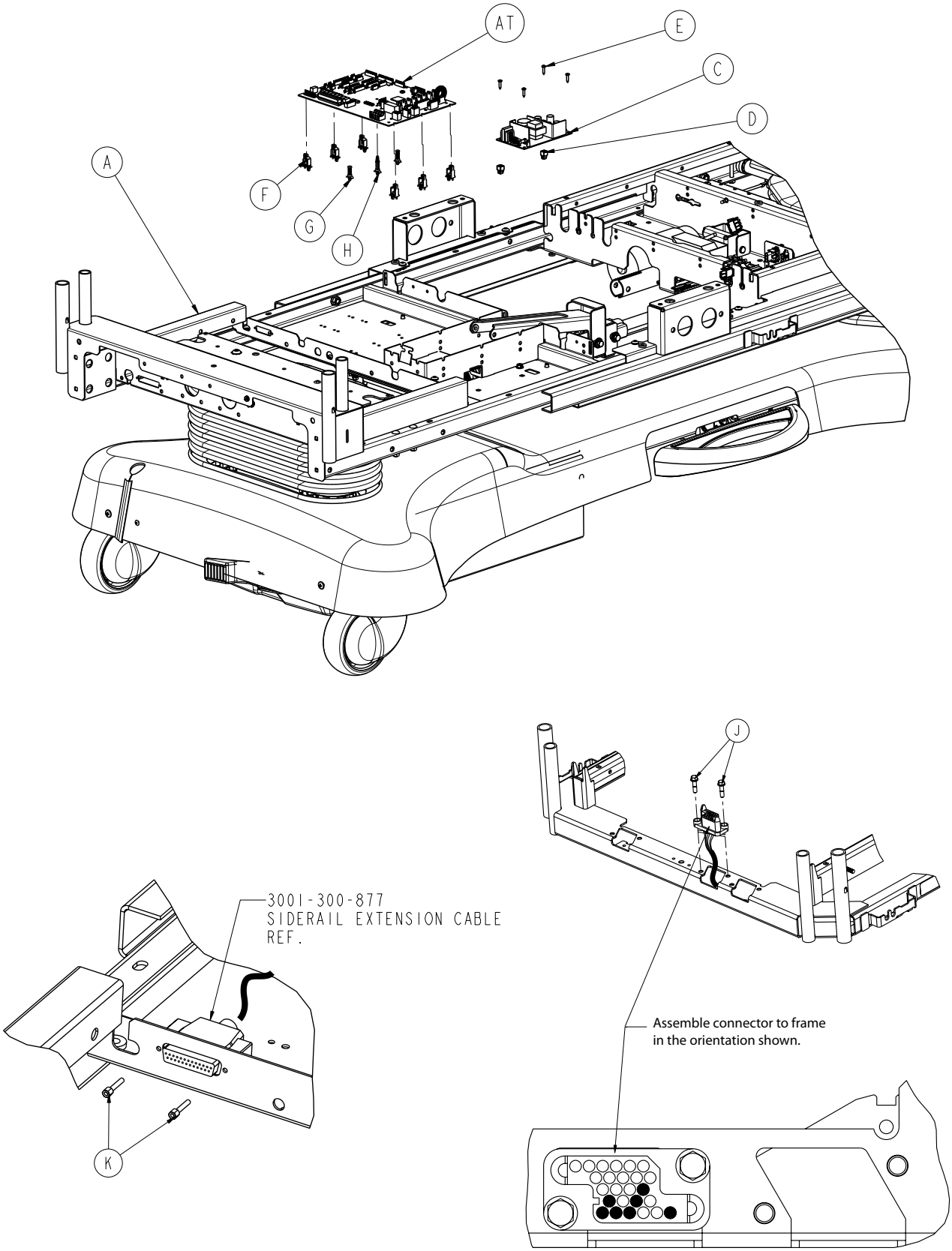

Return To Table of Contents

Electrical Litter Assembly, Battery Backup, *i*Bed® Wireless Option

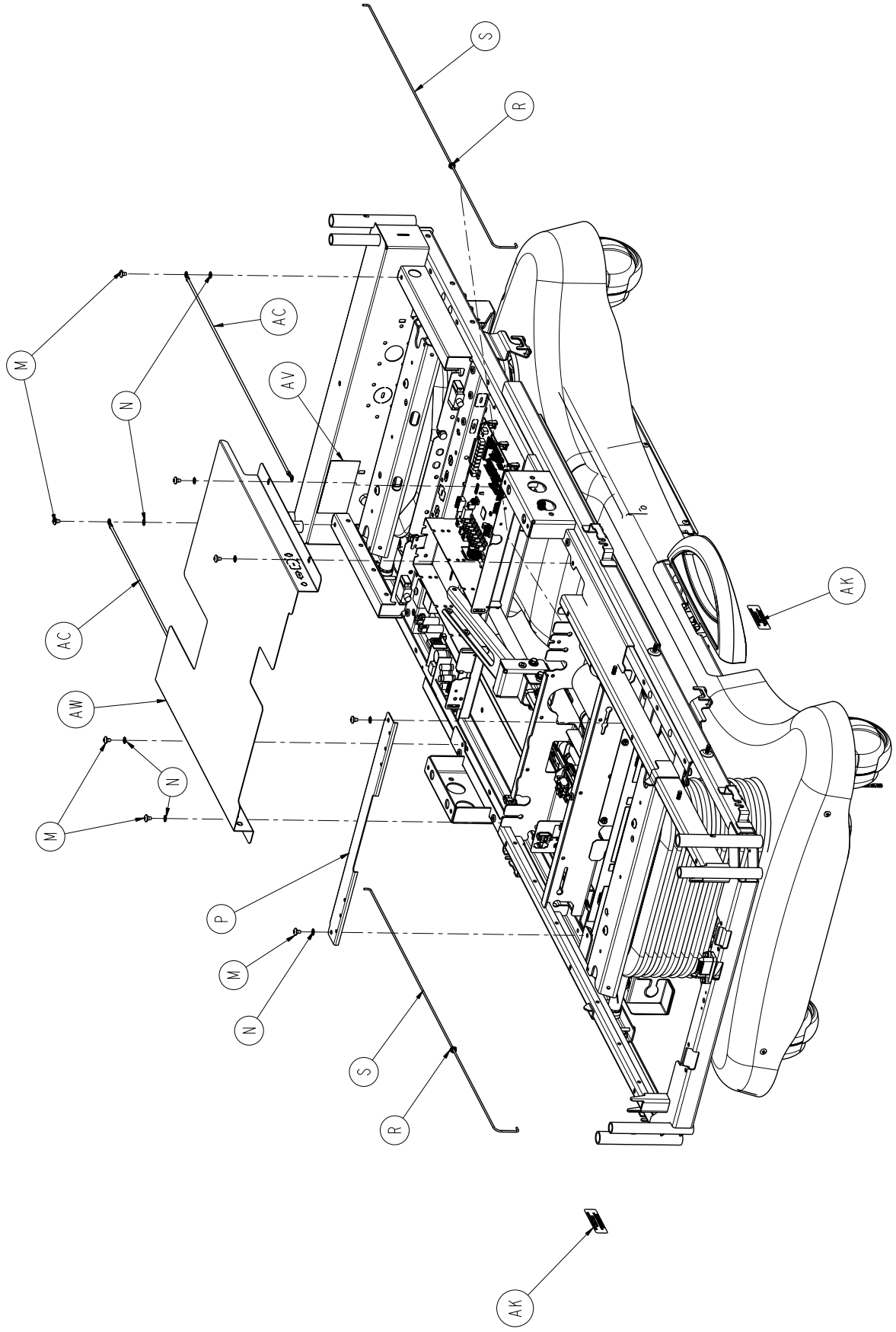

Return To Table of Contents

Electrical Litter Assembly, Battery Backup, *i*Bed® Wireless Option

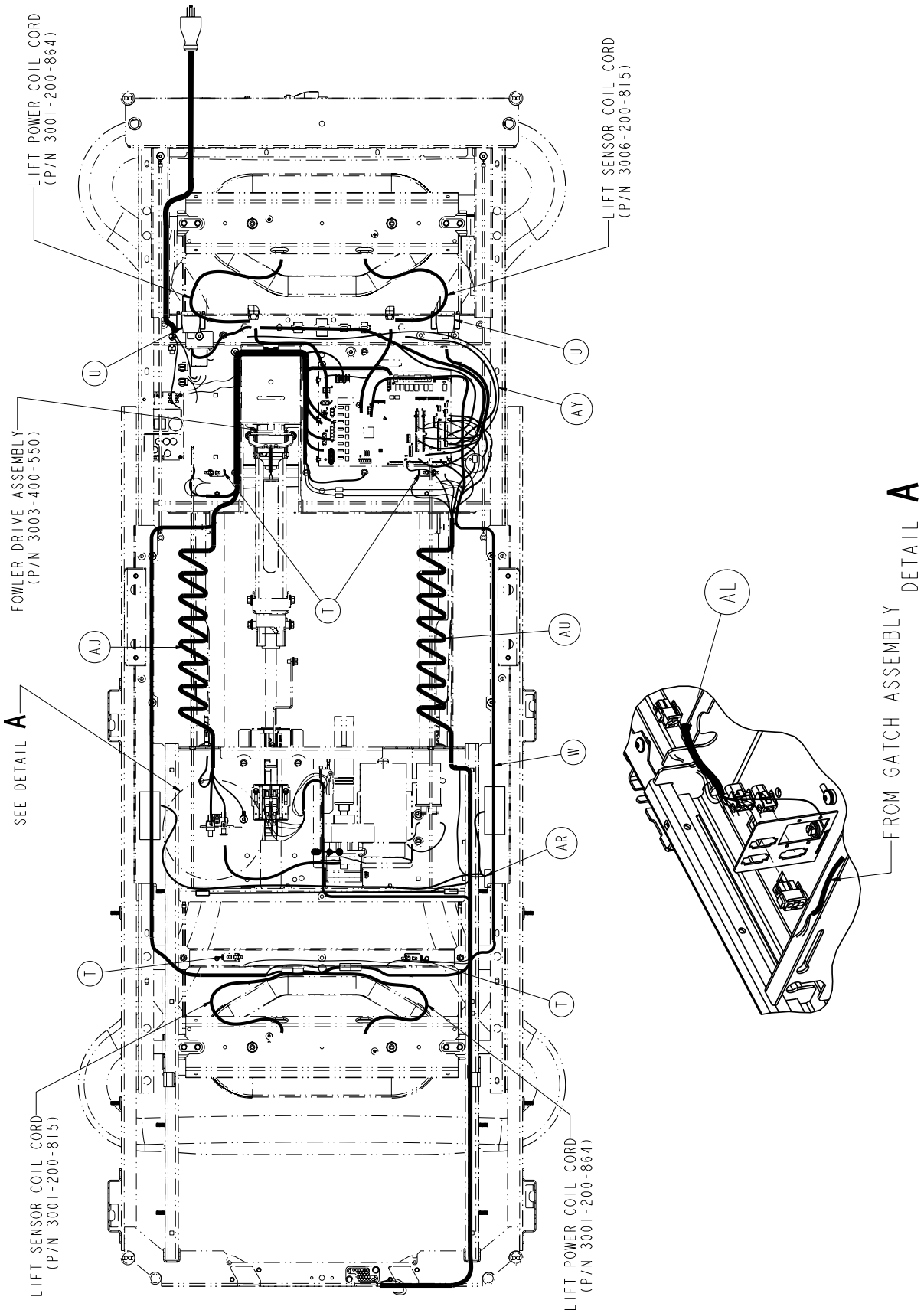

Return To Table of Contents

Electrical Litter Assembly, Battery Backup, *i*Bed® Wireless Option

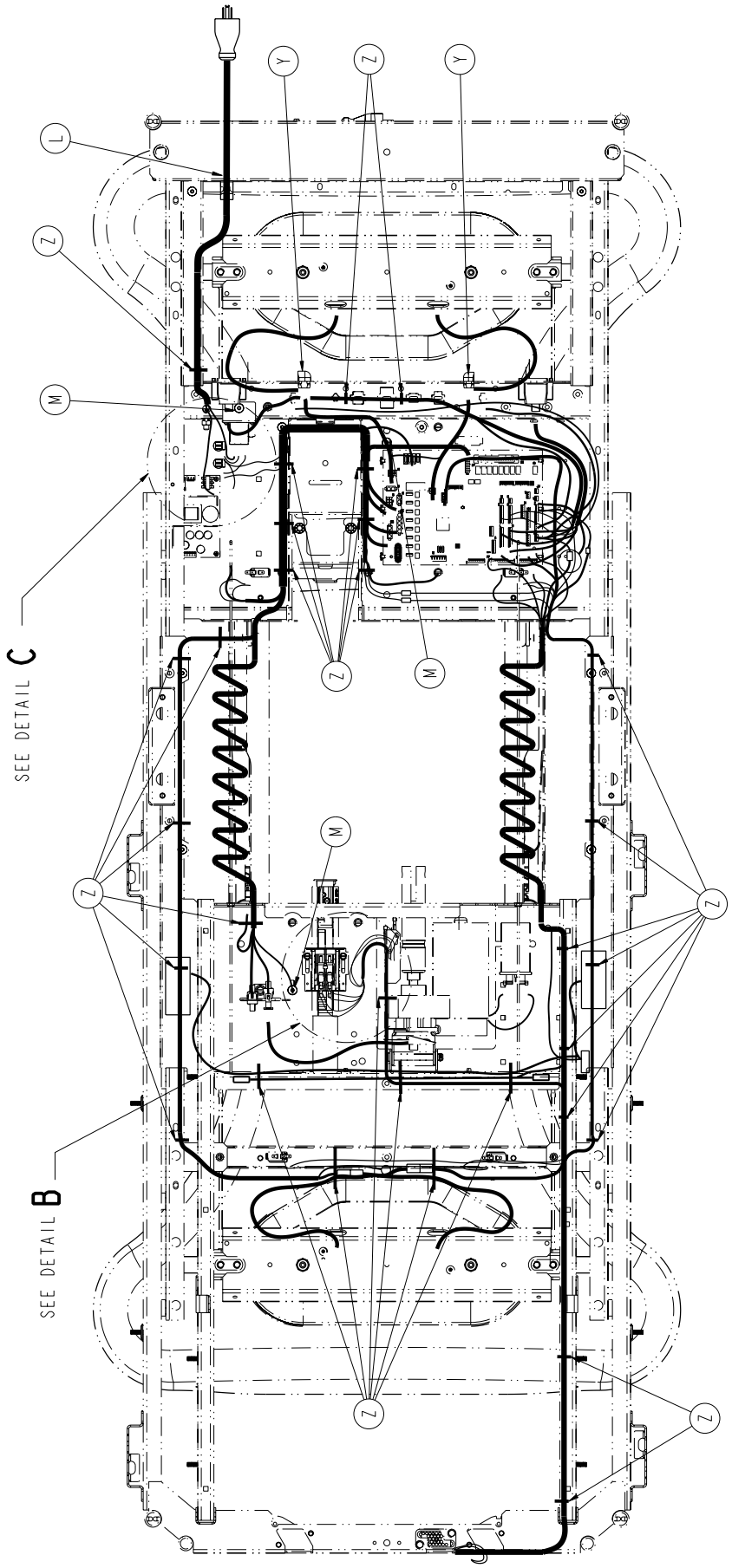

Return To Table of Contents

DETAIL C

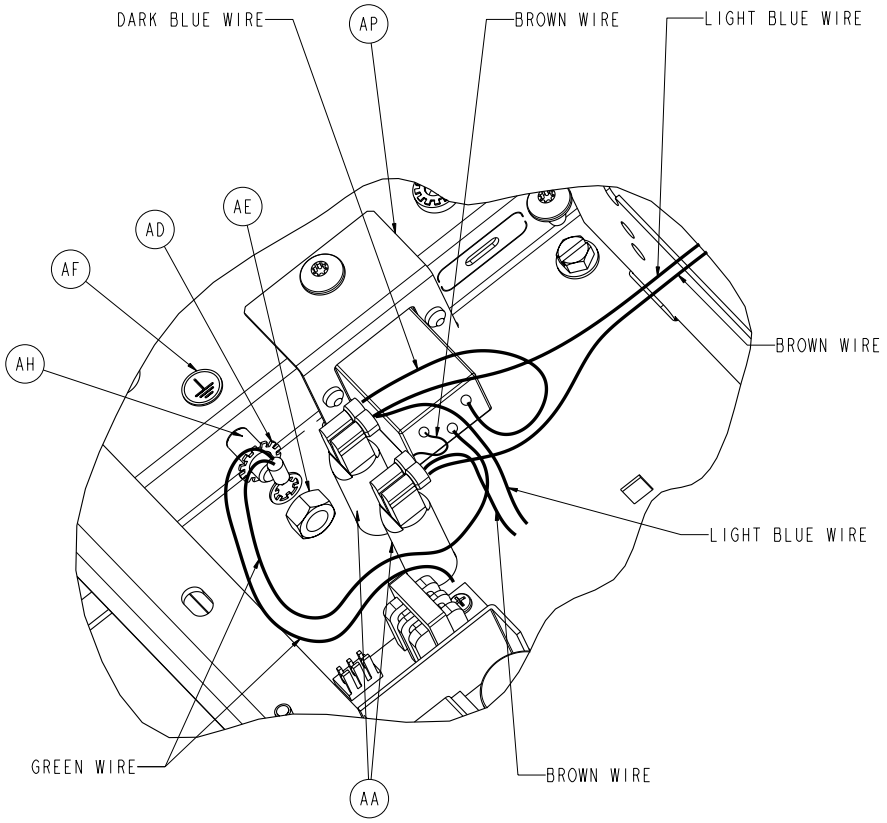

DETAIL B

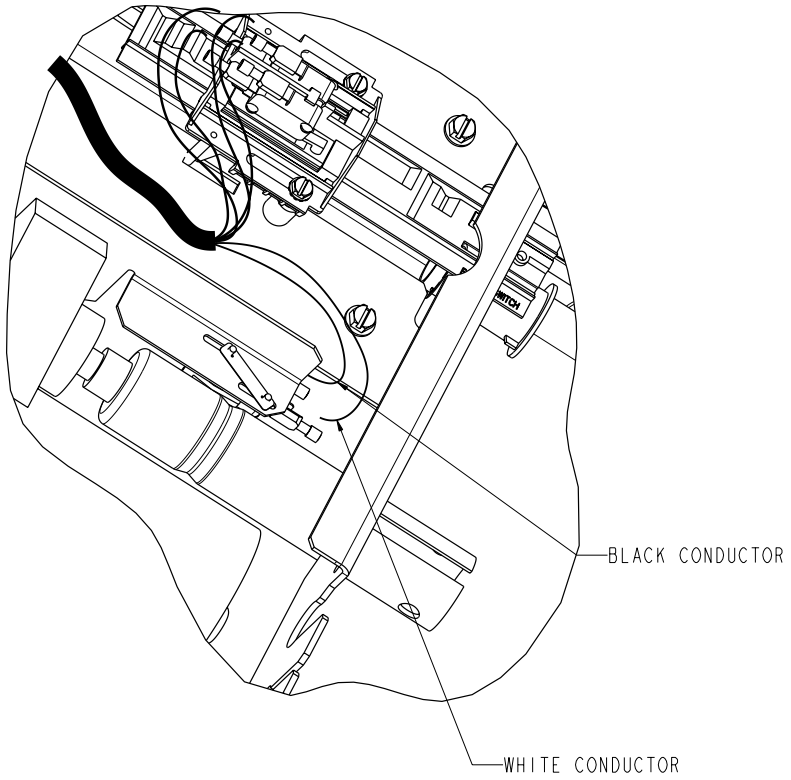

Return To Table of Contents

Electrical Litter Assembly, Battery Backup, *i*Bed® Wireless Option

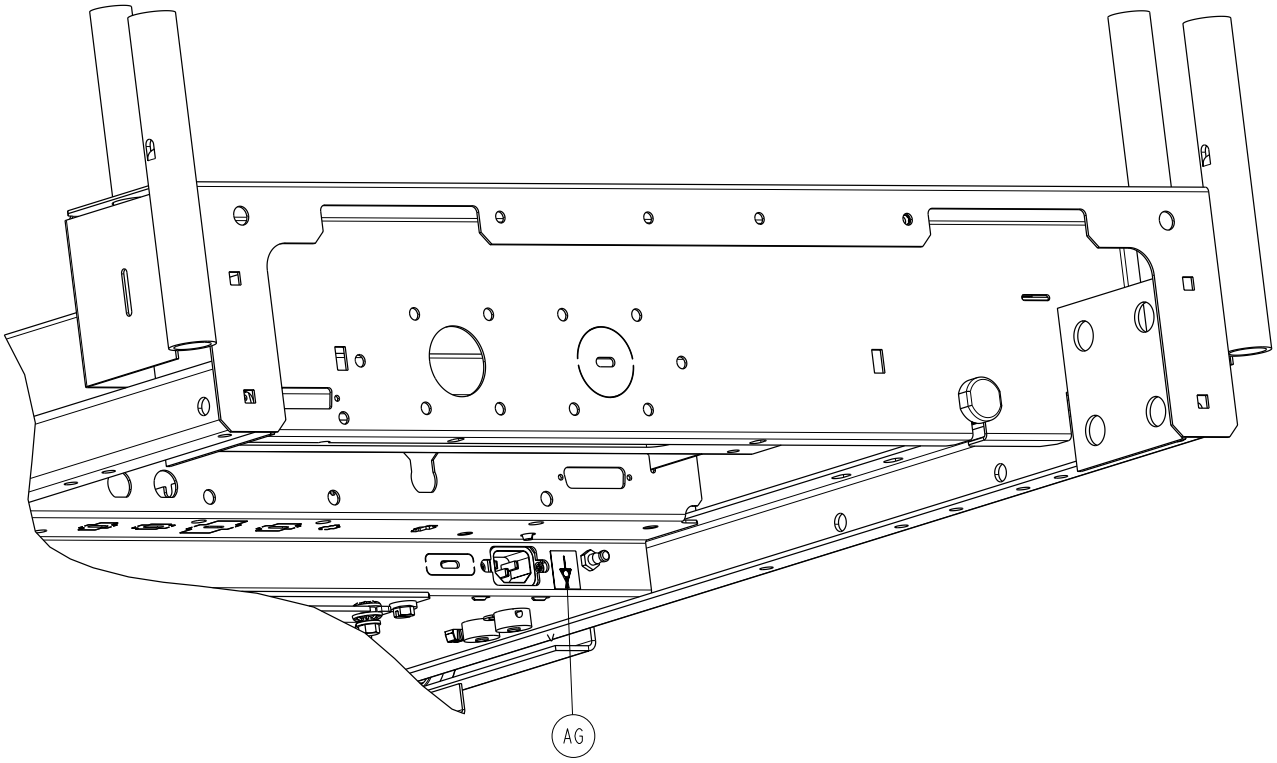

Return To Table of Contents

Electrical Litter Assembly - Battery Backup Option 5212-350-110 (Reference Only)

Item	Part No.	Part Name	Qty.
A	3006-300-197	Mechanical Litter Assembly	1
B	3006-200-006	Battery Backup Base Assembly	1
C	0059-157-000	Power Supply	1
D	0052-287-000	Fastex Plastic Grommet	4
E	0023-138-000	Pan Head Screw	4
F	0059-745-000	Universal Board Mount	6
G	0059-773-000	Push Spacer	2
H	0059-774-000	Locking Circuit Board Support	1
J	3001-200-228	Mounting Standoff	2
K	3001-300-007	Jack Screw	4
L	0030-027-000	Straight Through Strain Relief Bushing	1
M	0007-053-000	Truss Head Screw	13
N	0013-010-000	External tooth Lockwasher	6
P	3006-301-023	Cross Support Cover	1
R	0052-822-000	Snap-in Nyliner Bearing	2
S	3001-300-011	Guide Rod	2
T	3000-300-058	Plunger Switch	4
U	3001-300-877	Siderail Extension Cable	1
W	3001-300-865	Motion Interrupt Lift Sensor Cable	1
X	0030-048-000	Heyco Strain Relief Siderail	1
Y	0030-047-000	Heyco Strain Relief Siderail	1
Z	3000-300-113	8” Cable Tie	34
AA	0059-400-000	8 Amp Circuit Breaker	2
AC	3002-300-874	Litter Ground Jumper	2
AD	0013-038-000	Lockwasher Extension Spring	1
AE	0016-033-000	Kep Nut	1
AF	0036-046-000	Ground Label	1
AG	0036-115-000	Ground Label	1
AH	2011-001-215	Grounding Lug Tuv	1
AJ	3002-300-861	Power Harness	1
AK	3006-300-601	Foley Bag Hook Label	2
AM	3006-450-150	HE Battery Backup Enclosure Assembly	1
AP	3006-300-881	Power Inlet Cable	1
AR	3006-410-020	Night Light Option	1
AT	3006-308-900	CPU Board	1
AU	3006-300-808	Siderail Coil Cord	1
AV	3006-300-625	Specification Label	1
AW	3006-301-088	Mid Litter Cover Assembly	1
AY	3003-300-803	CPU to Siderail Sensor Cable	1

Return To Table of Contents

Electrical Litter Assembly, Zoom®, *i*Bed® Wireless Option

For Reference Only: 5212-344-895

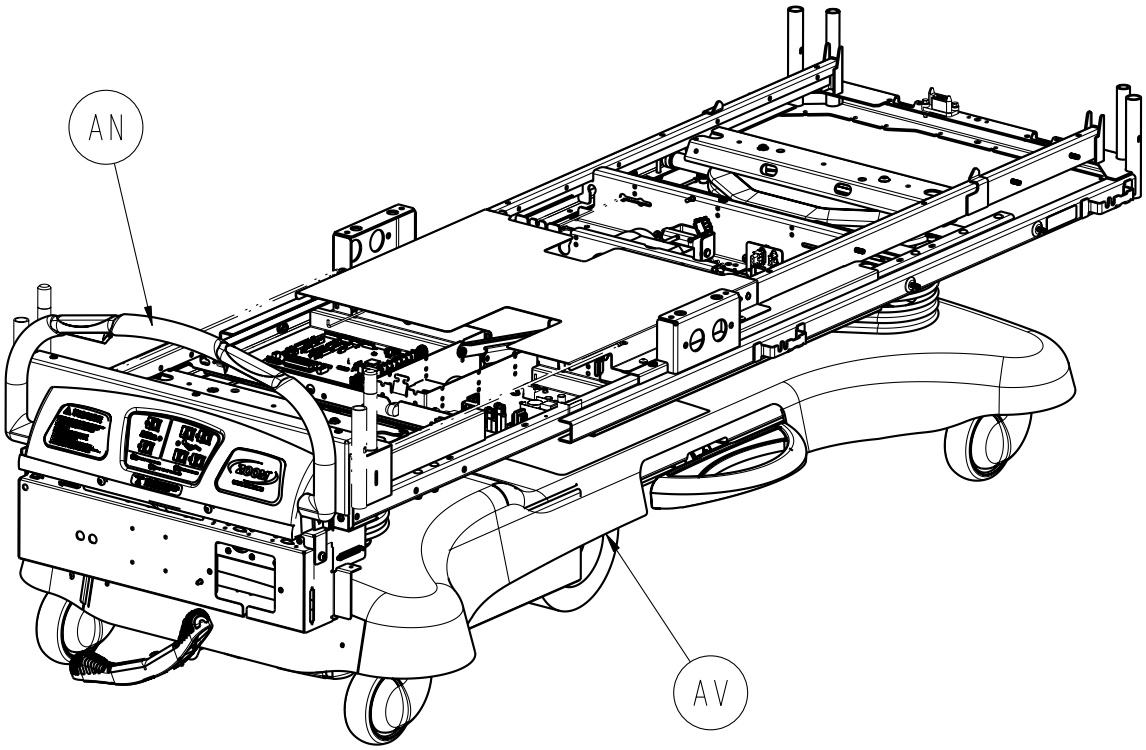

Return To Table of Contents

Electrical Litter Assembly, Zoom®, *i*Bed® Wireless Option

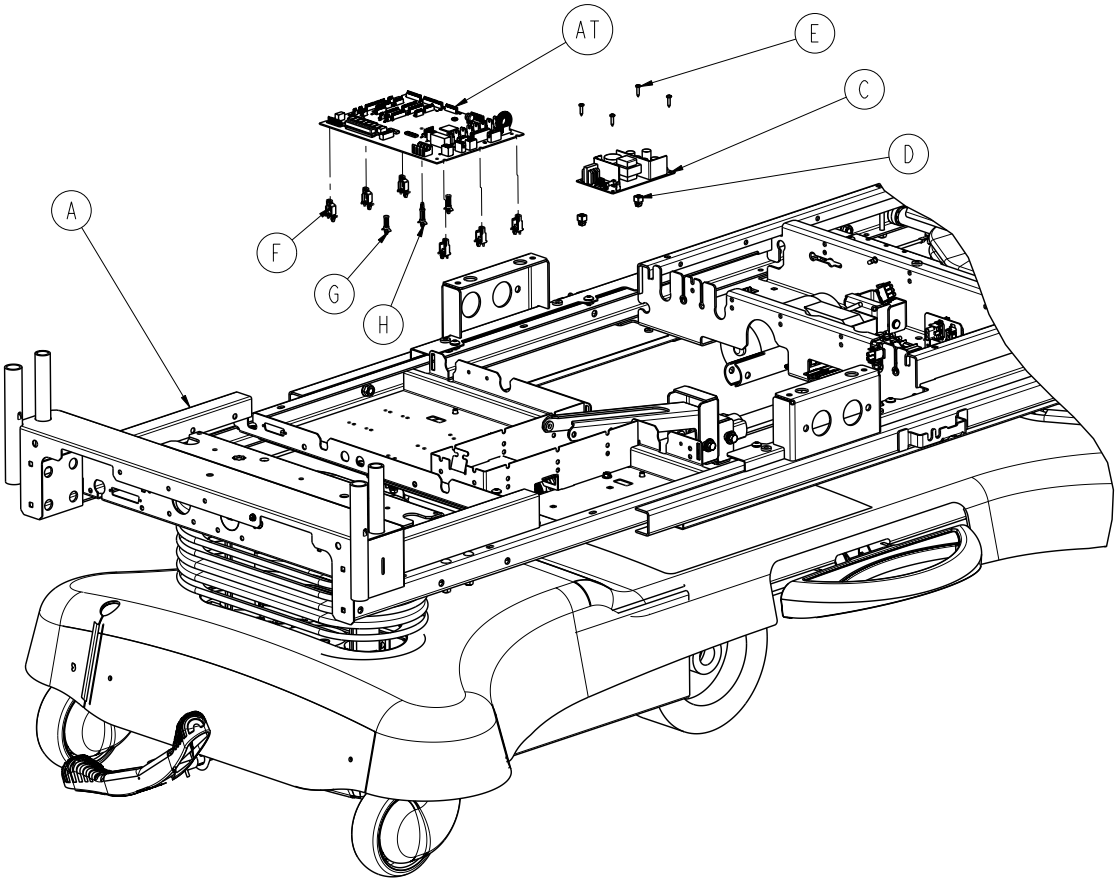

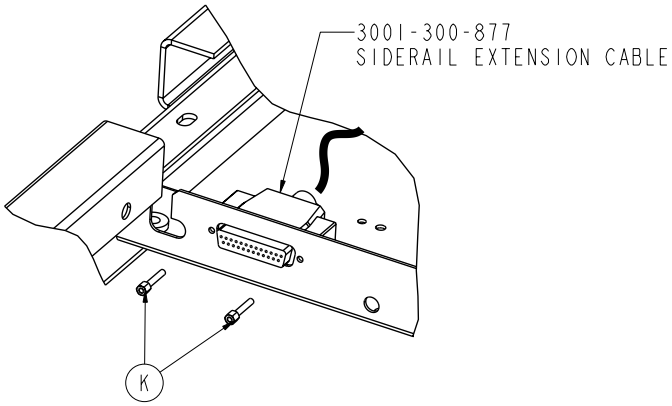

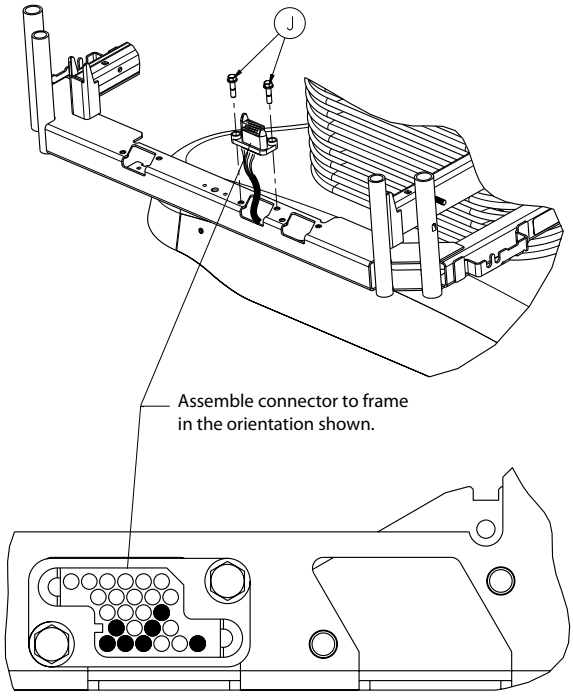

Return To Table of Contents

Electrical Litter Assembly, Zoom®, *i*Bed® Wireless Option

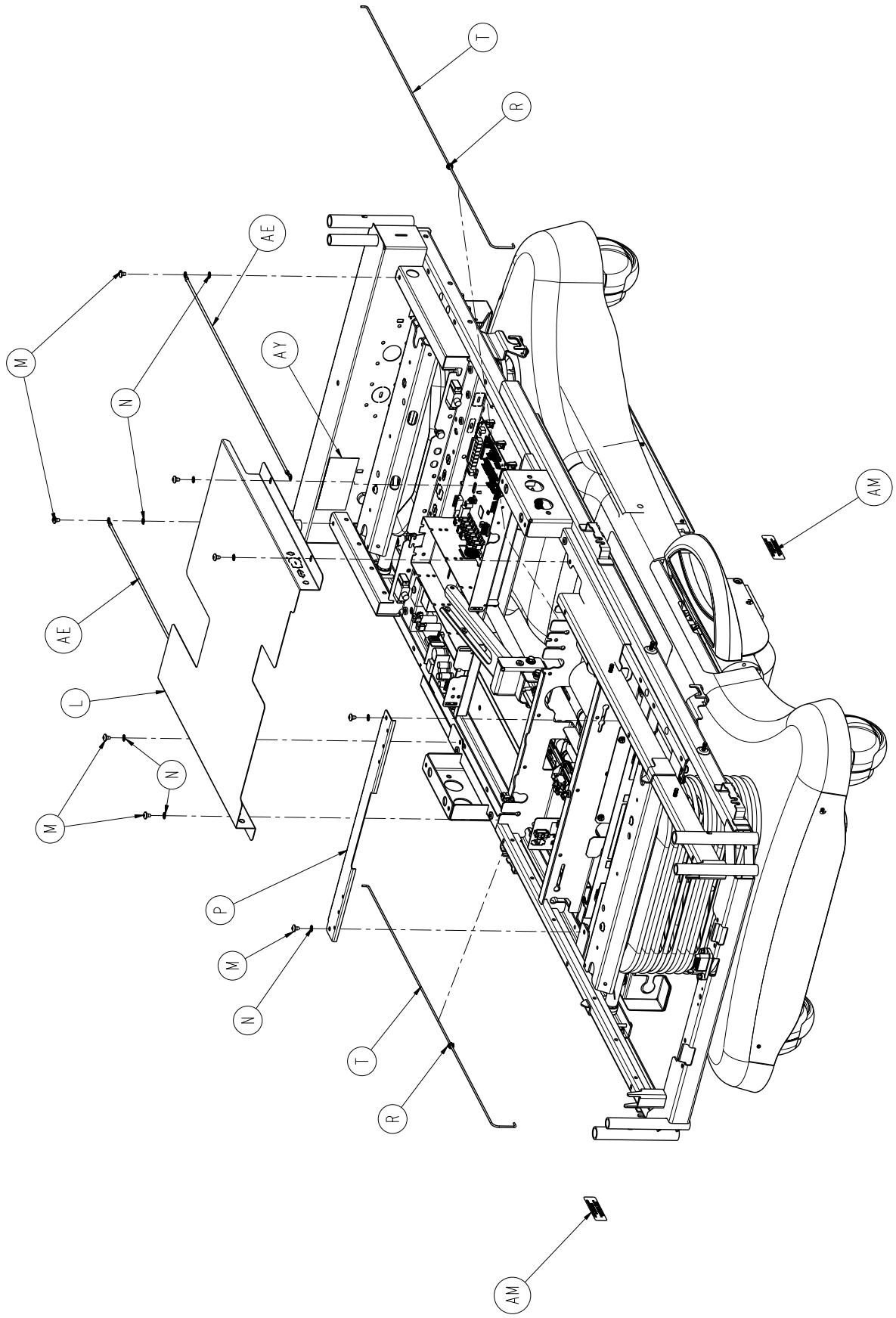

Return To Table of Contents

Electrical Litter Assembly, Zoom®, *i*Bed® Wireless Option

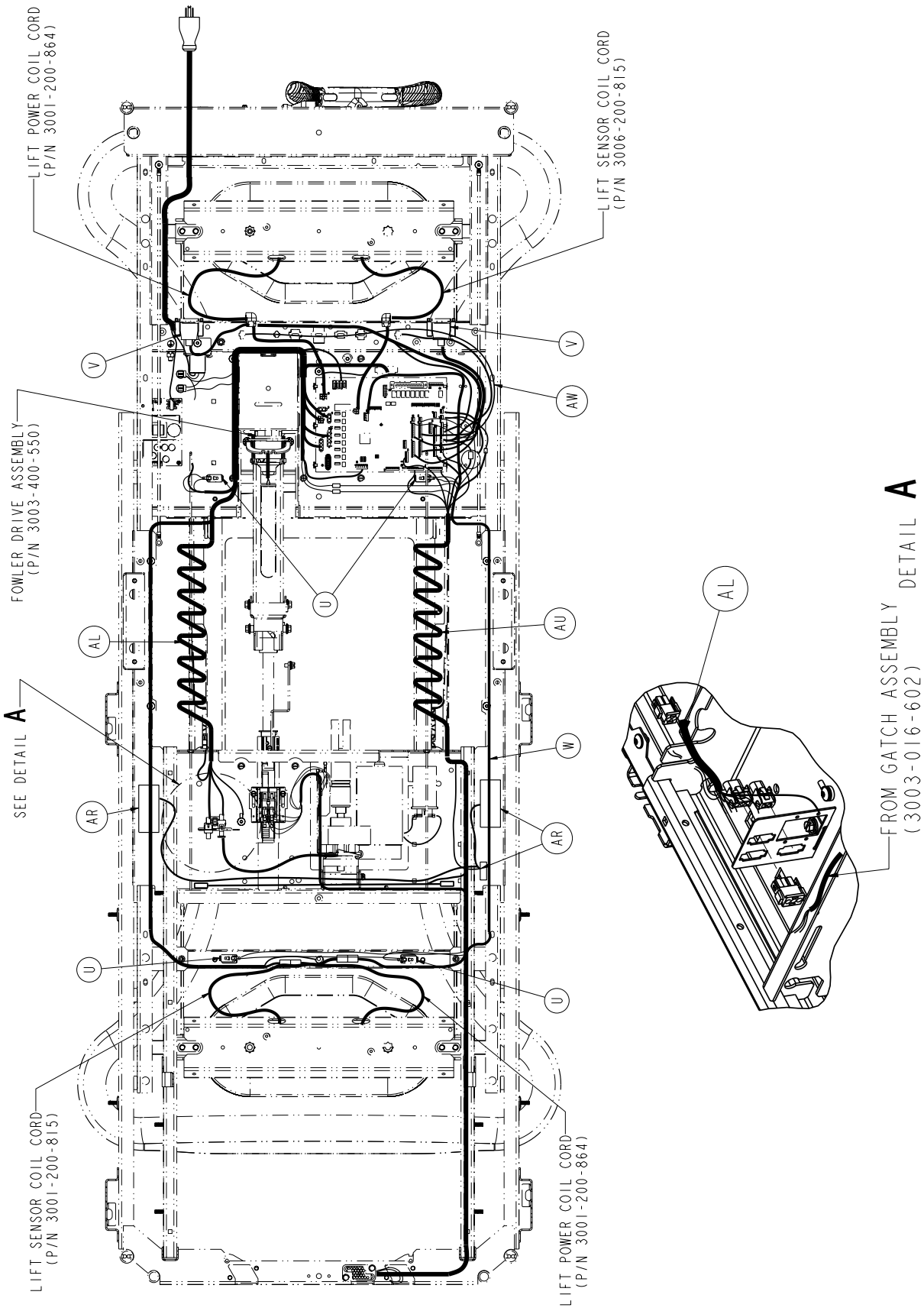

Return To Table of Contents

Electrical Litter Assembly, Zoom®, *i*Bed® Wireless Option

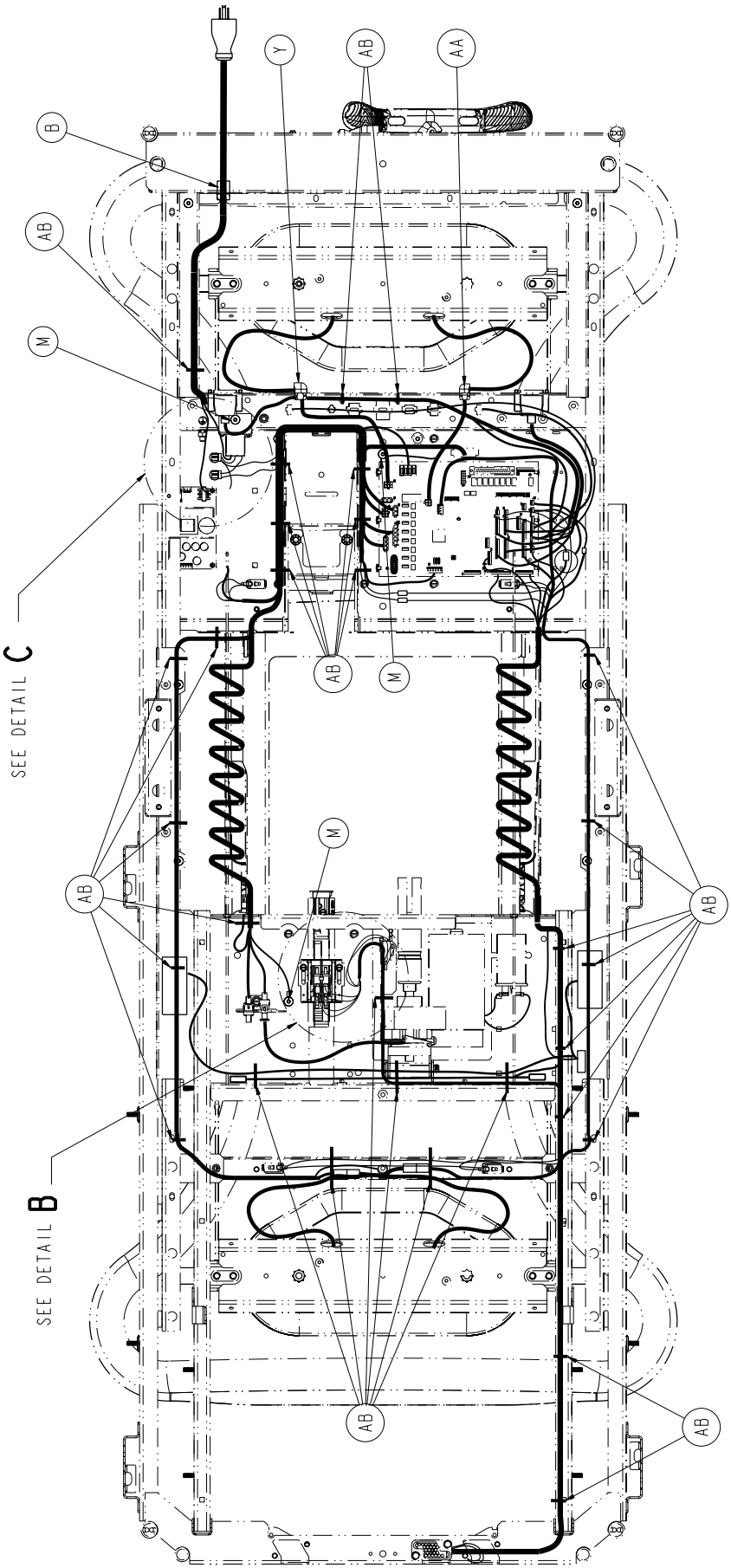

Return To Table of Contents

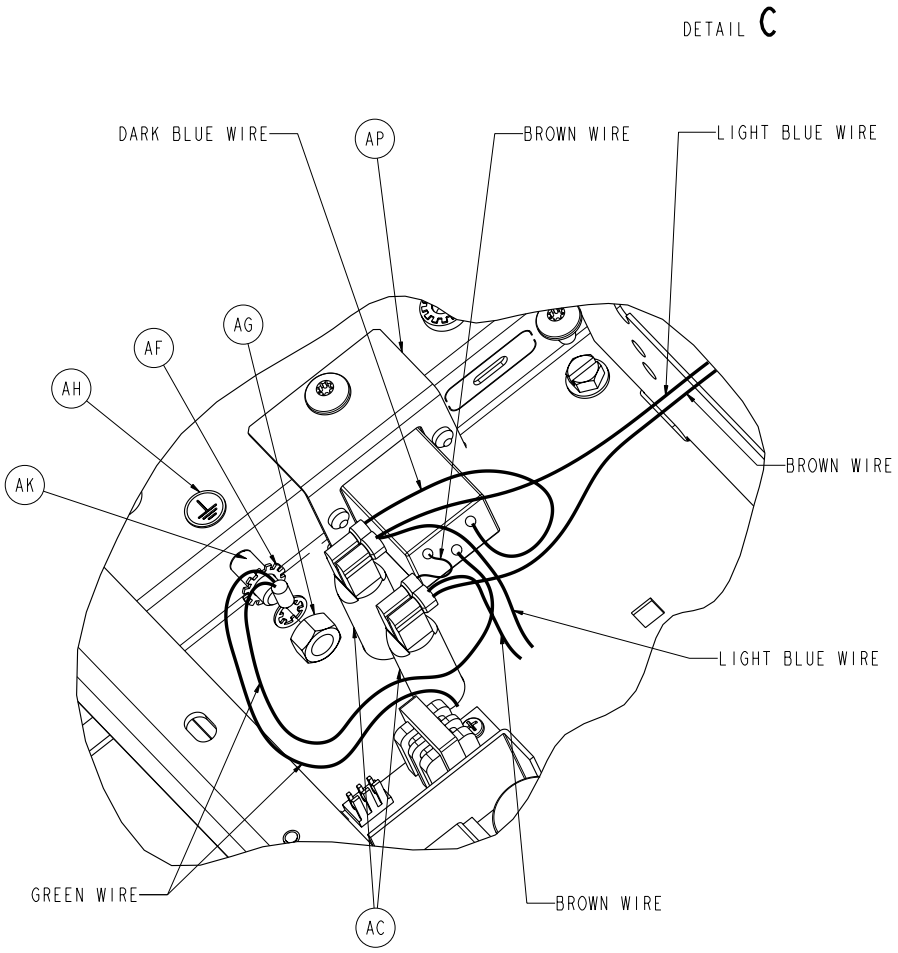

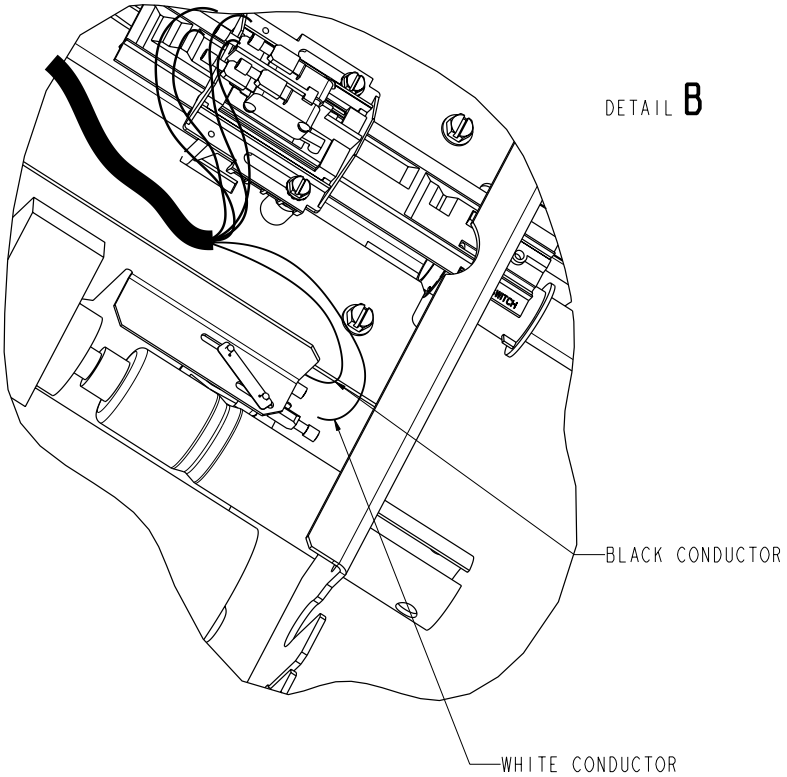

Return To Table of Contents

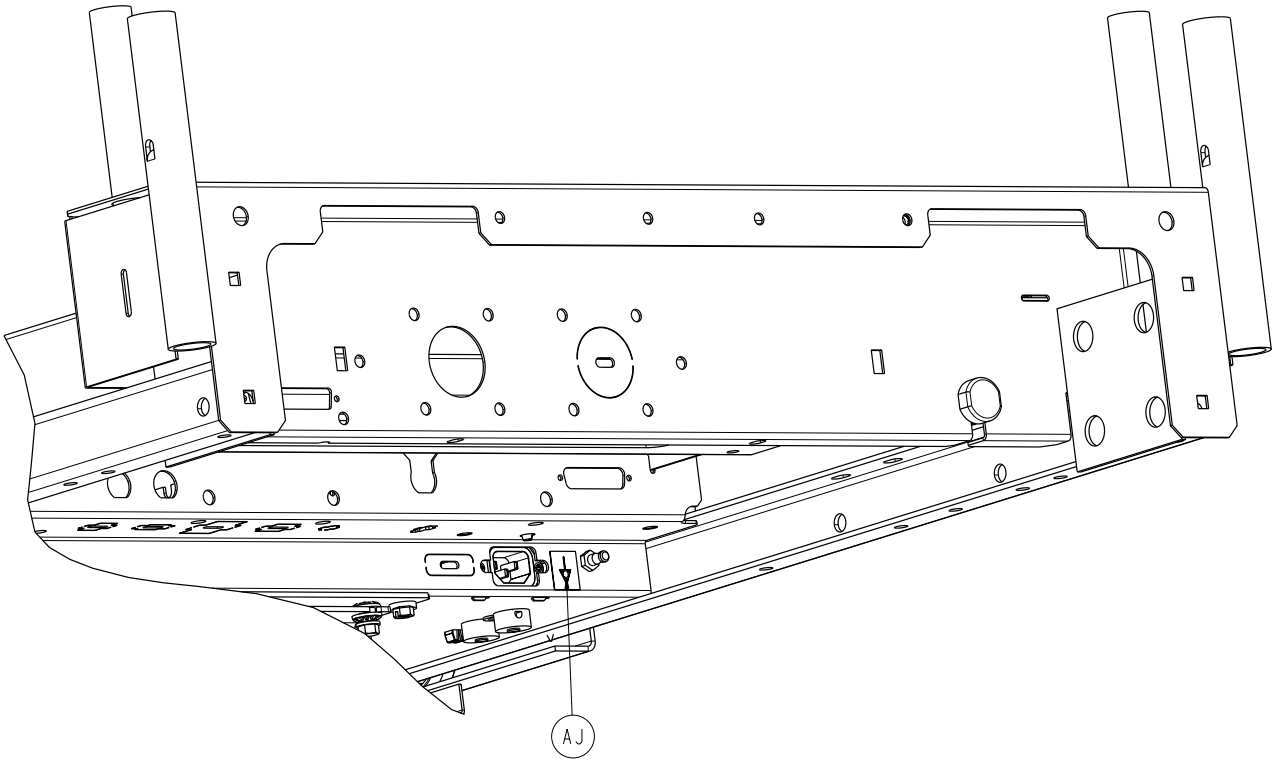

Return To Table of Contents

Electrical Litter Assembly - Zoom® Option 5212-344-895 (Reference Only)

Item	Part No.	Part Name	Qty.
A	3006-300-197	Mechanical Litter Assembly	1
B	0030-027-000	Straight Thru Strain Relief Bushing	1
C	0059-157-000	Power Supply	1
D	0052-287-000	Fastex Plastic Grommet	4
E	0023-138-000	Pan Head Screw	4
F	0059-745-000	Universal Board Mount	6
G	0059-773-000	Push Spacer	2
H	0059-774-000	Locking Circuit Board Support	1
J	3001-200-228	Mounting Standoff	2
K	3001-300-007	Jack Screw	4
L	3006-301-088	Mid Litter Cover Assembly	1
M	0007-053-000	Truss Head Screw	13
N	0013-010-000	External Tooth Lockwasher	6
P	3006-301-023	Cross Support Cover	1
R	0052-822-000	Snap-in Nyliner Bearing	2
T	3001-300-011	Guide Rod	2
U	3000-300-058	Plunger Switch	4
V	3001-300-877	Siderail Extension Cable	1
W	3001-300-865	Motion Interrupt Lift Sensor Cable	1
Y	0030-048-000	Heyco Strain Relief SR	1
AA	0030-047-000	Heyco Strain Relief SR	1
AB	3000-300-113	8” Cable Tie	34
AC	0059-400-000	8 Amp Circuit Breaker	2
AE	3002-300-874	Ground Jumper Litter	2
AF	0013-038-000	Lock Washer Extension Spring	1
AG	0016-033-000	Kep Nut	1
AH	0036-046-000	Ground Label	1
AJ	0036-115-000	Ground Label	1
AK	2011-011-215	Grounding Lug Tuv	1
AL	3002-300-861	Power Harness	1
AM	3006-300-601	Foley Bag Hook Label	2
AN	3006-131-010	Secure Zoom® Litter Assembly	1
AP	3006-300-881	Power Inlet Cable	1
AR	3006-410-020	Night Light Option	1
AT	3006-308-900	CPU Board	1
AU	3006-300-808	Siderail Coil Cord	1
AV	3006-200-005	Zoom® Bed Base Assembly	1
AW	3003-300-803	CPU to Siderail Sensor Cable	1
AY	3006-300-625	115 Volt Specification Label	1

Return To Table of Contents

For Reference Only: 3006-300-197

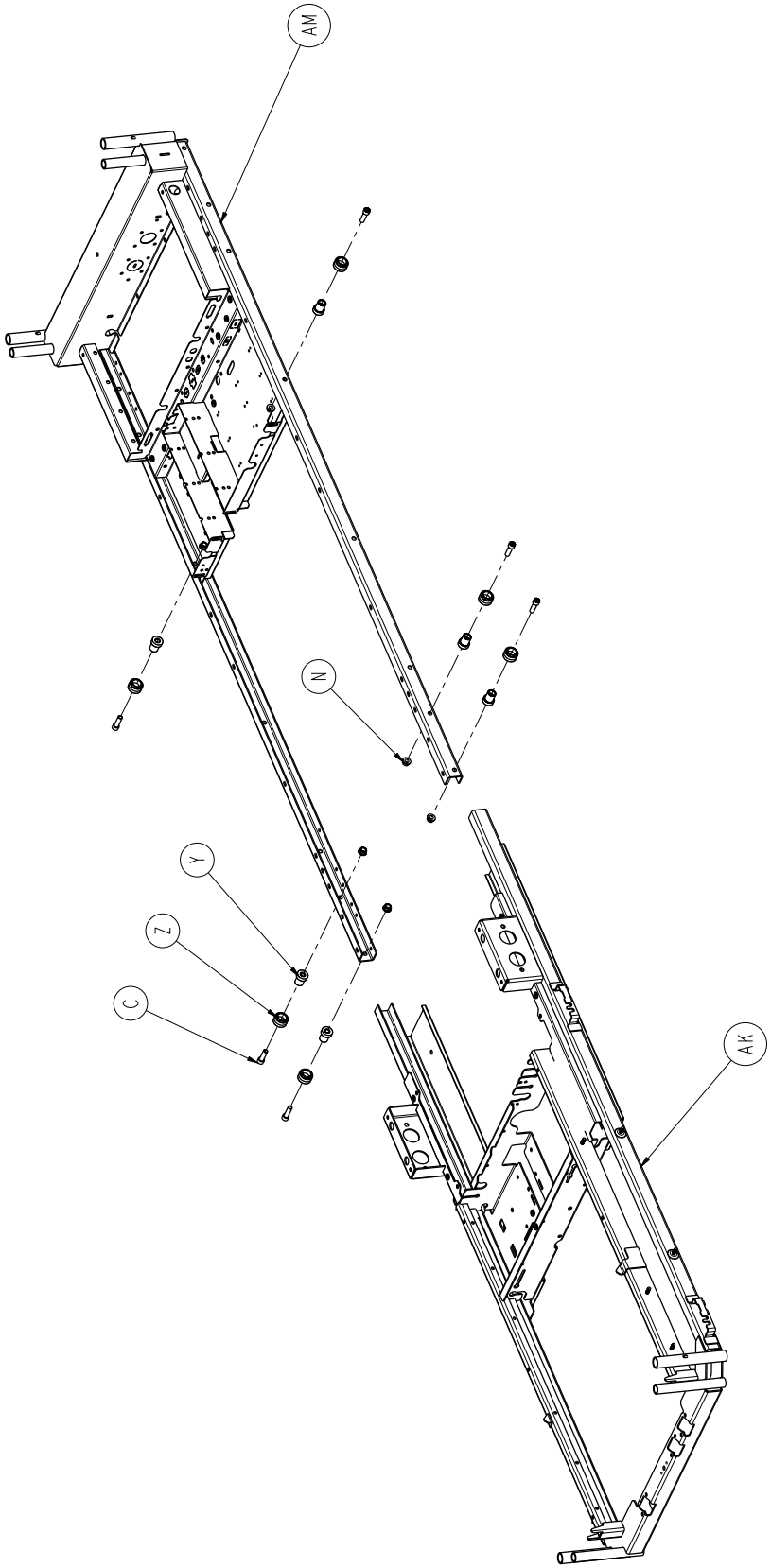

Return To Table of Contents

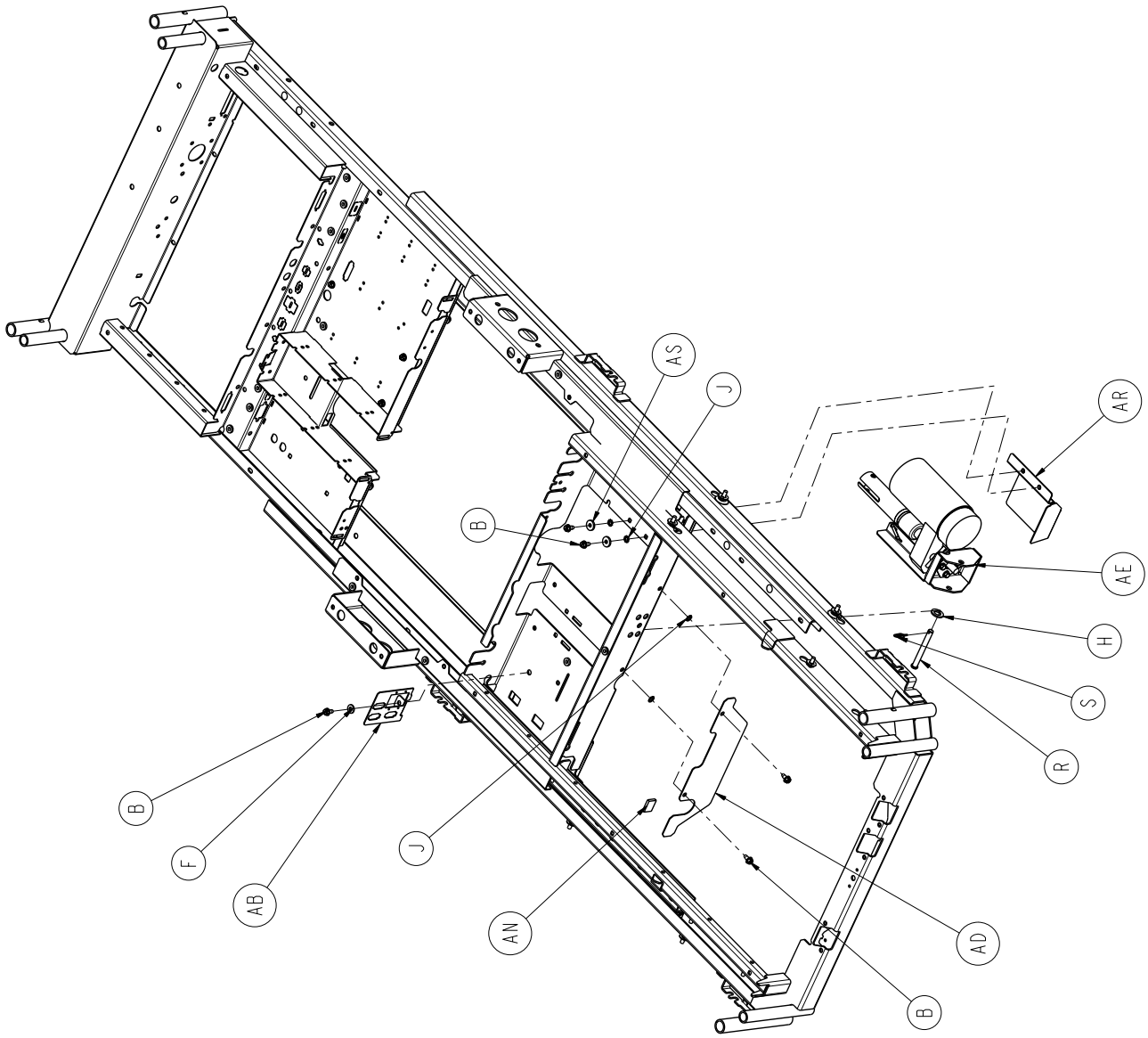

Return To Table of Contents

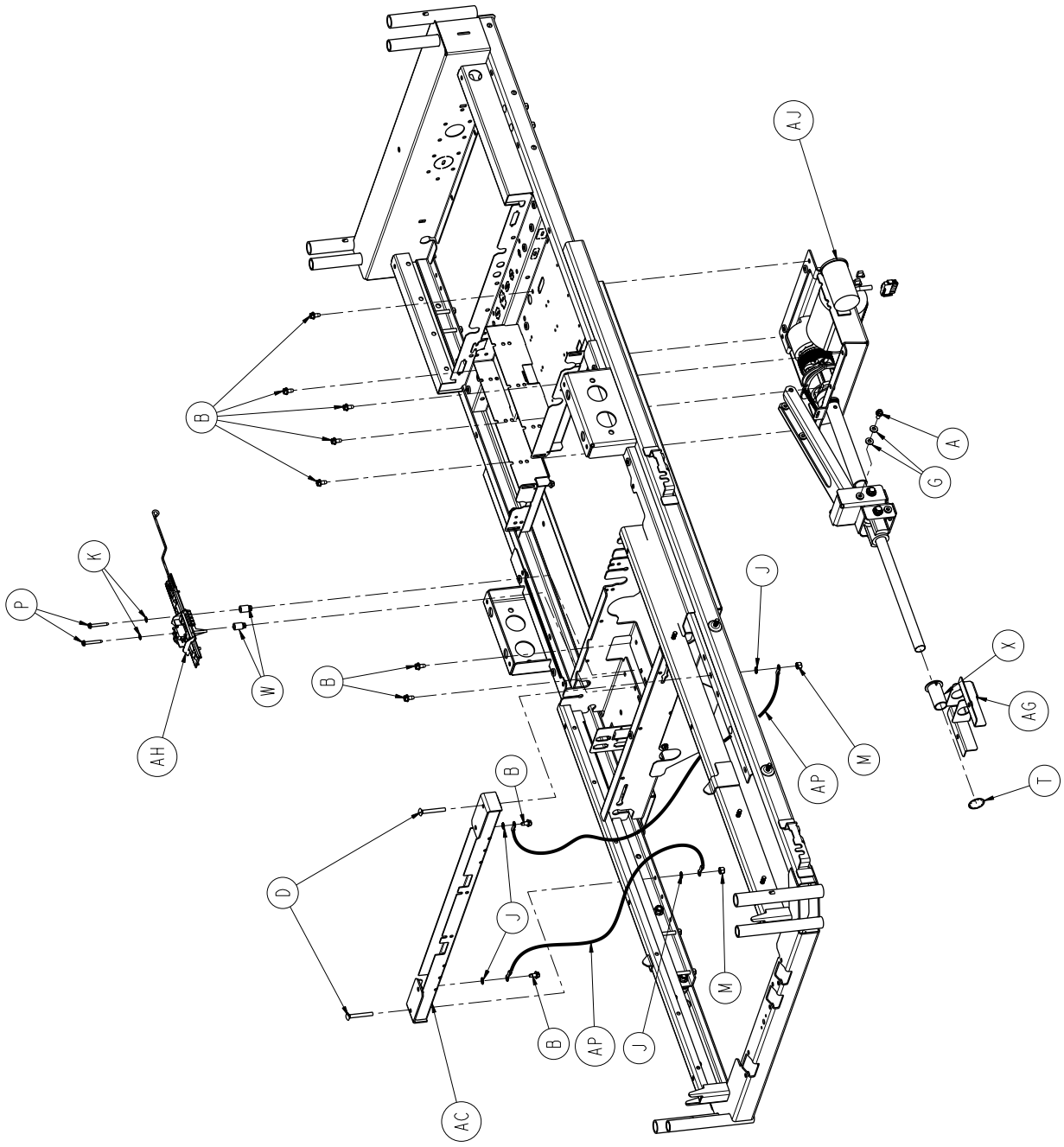

Return To Table of Contents

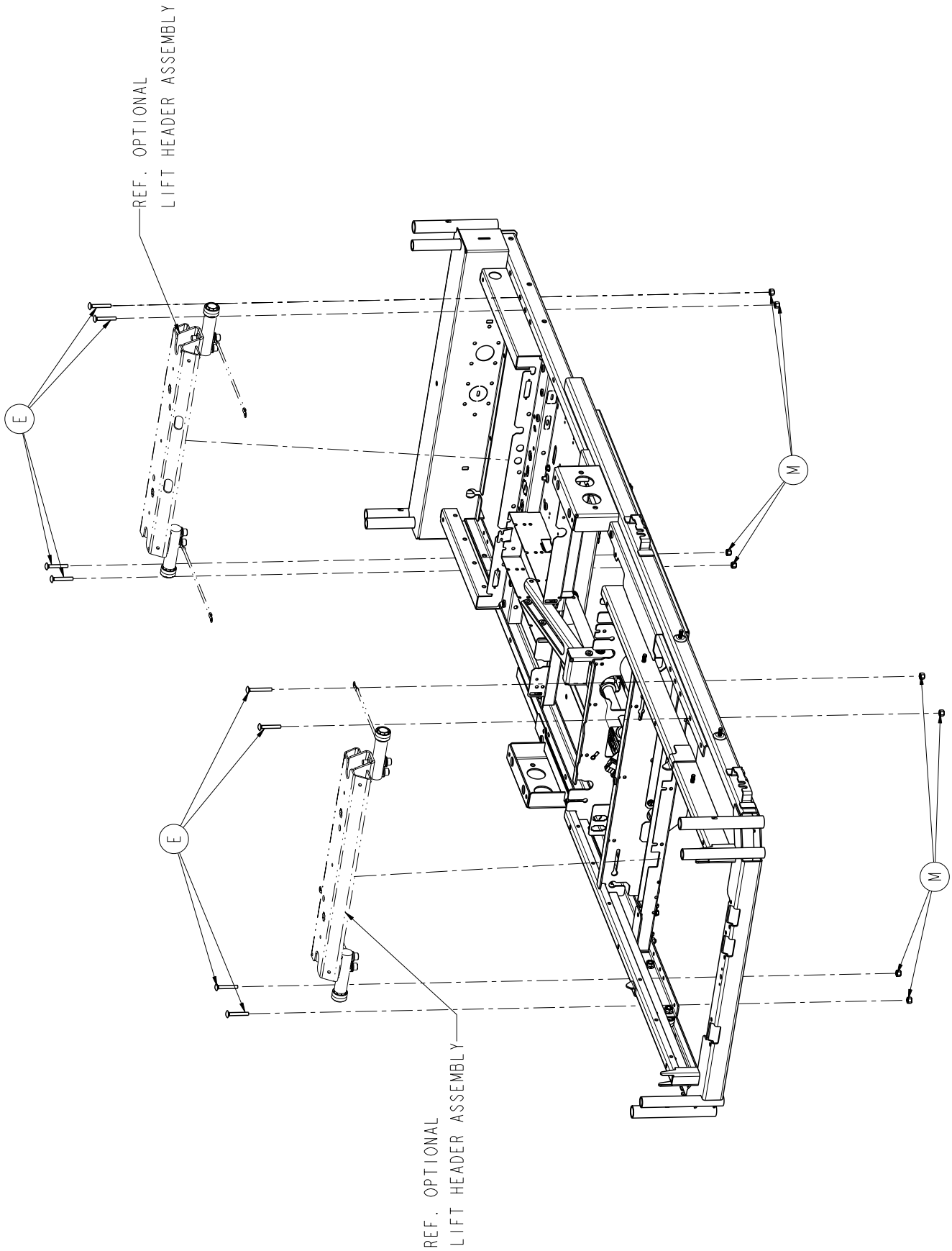

Return To Table of Contents

Mechanical Litter Assembly - Common Components 3006-300-197 (Reference Only)

Item	Part No.	Part Name	Qty.
A	0003-121-000	Hex Washer Head Screw	1
B	0003-221-000	Hex Washer Head Screw	14
C	0004-211-000	Socket Head Cap Screw	6
D	0005-024-000	Carriage Bolt	2
E	0005-046-000	Carriage Bolt	8
F	0011-002-000	Washer	1
G	0011-063-000	Washer	2
H	0011-529-000	Adhesive Rubber Washer	1
J	0013-010-000	External Tooth Lock Washer	8
K	0013-018-000	External Tooth Lock Washer	2
M	0016-006-000	Hex Kep Nut	10
N	0016-093-000	Flange Nut	6
P	0023-251-000	Tapping Head Screw	2
R	0026-279-000	Clevis Pin	1
S	0027-022-000	Rue Ring Cotter	1
T	0028-122-000	Retaining Ring	1
W	0052-800-000	Fastex Plastic Grommet	2
X	3000-300-009	Support Screw Bushing	1
Y	3000-300-352	Roller Shaft	6
Z	3000-300-353	Roller	6
AB	3001-300-269	Connector Mounting Bracket	1
AC	3006-301-370	Cross Support Assembly	1
AD	3006-310-417	Gatch Shield	1
AE	3006-300-720	Gatch Motor Assembly	1
AG	3002-301-491	Screw Support Bracket	1
AH	3002-343-035	Fowler Limit Switch Assembly	1
AJ	3006-300-550	Fowler Drive Assembly	1
AK	3006-300-204	Moving Frame Weldment	1
AM	3006-300-303	Stationary Frame Assembly	1
AN	7900-001-291	1” Vibration Tape	1
AP	3002-300-870	8” Litter Ground Jumper	4
AR	3006-301-422	Motor Shield	1
AS	0011-159-000	Steel Washer	2

Return To Table of Contents

Notes

Return To Table of Contents

CPR Damper Assembly Option

For Reference Only: 3006-999-070

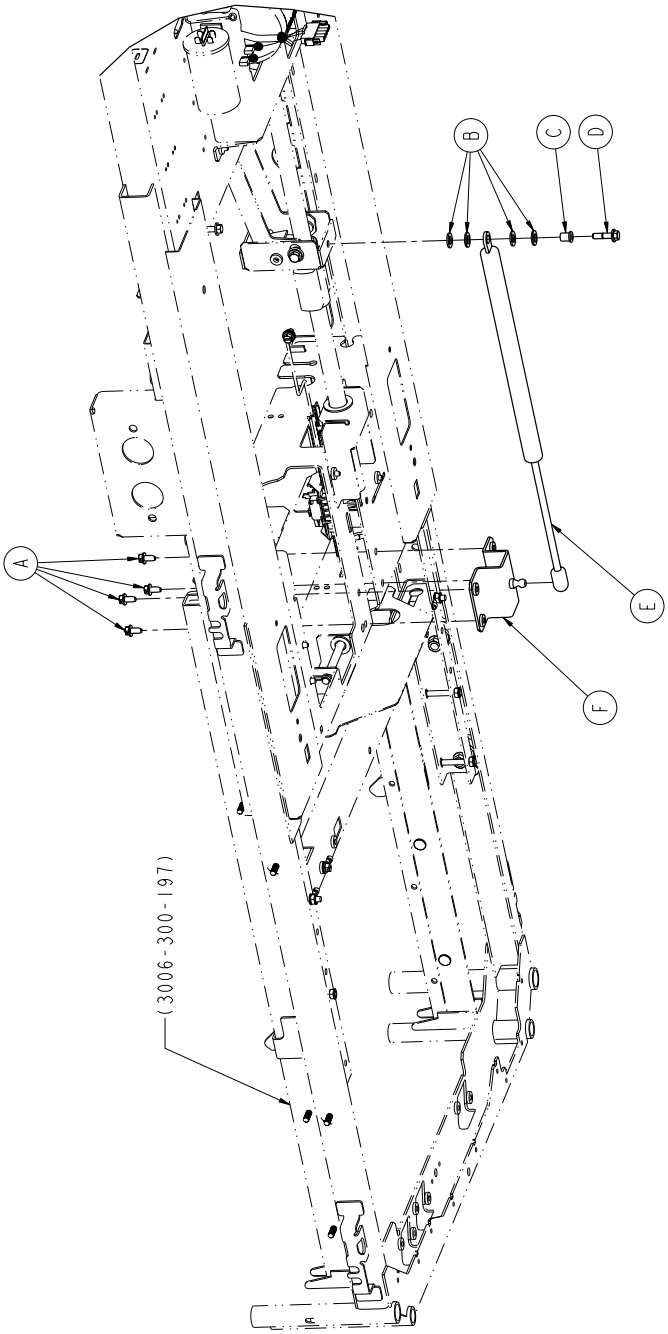

CPR Damper Assembly Option - 3006-999-070 (Reference Only)

Item	Part No.	Part Name	Qty.
A	0003-221-000	Hex Washer Head Screw	4
B	0011-448-000	Plain Washer	4
C	0052-818-000	Powdered Metal Flange Bearing	1
D	3001-200-229	Mounting Standoff	1
E	3006-345-488	CPR Damper	1
F	3006-345-490	Bracket - Damper Mount Assembly	1

Return To Table of Contents

Lift Header Assembly - No Load Cells

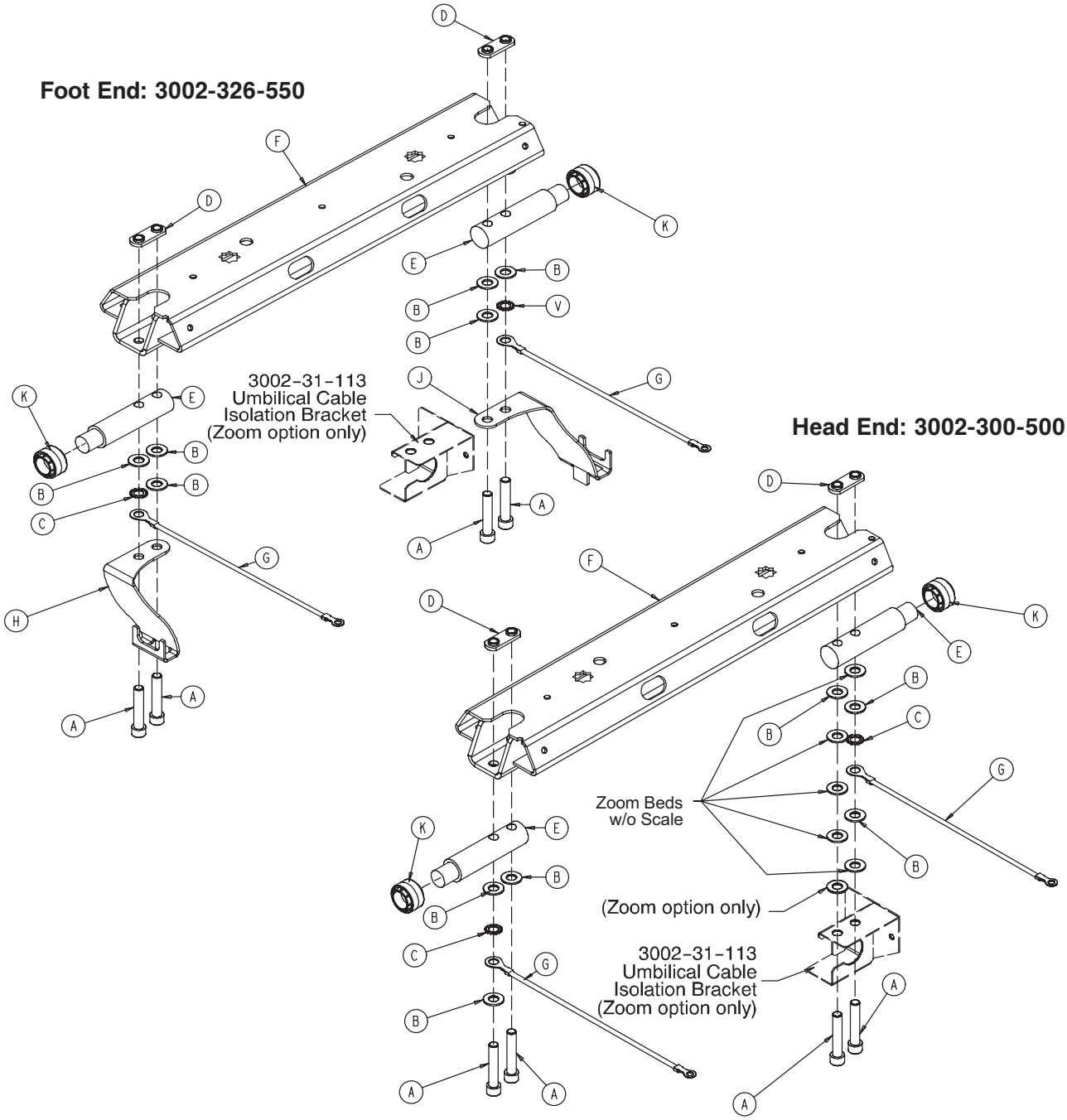

Lift Header - Std. Bed/Iso. Foley Bags - 3002-326-550

Item	Part No.	Part Name	Qty.
A	0004-288-000	Hex Soc. Hd. Cap Screw	4
B	0011-004-000	Flat Washer	2
C	0013-032-000	Ext. Tooth Lock Washer	2
D	3002-300-509	Weldnut	2
E	3002-300-511	“Imitation” Load Cell	2
F	3001-300-530	Lift Header	1
G	3002-300-871	Ground Jumper	2
H	3002-326-010	Iso. Foley Bag Ass’y, Lt.	1
J	3002-326-020	Iso. Foley Bag Ass’y, Rt.	1
H	3000-300-353	Roller Cap	2

Lift Header - Standard Bed - 3002-300-500

Item	Part No.	Part Name	Qty.
A	0004-288-000	Hex Soc. Hd. Cap Screw	4
B	0011-004-000	Flat Washer	6
C	0013-032-000	Ext. Tooth Lock Washer	2
D	3002-300-509	Weldnut	2
E	3001-300-511	“Imitation” Load Cell	2
F	3001-300-530	Lift Header	1
G	3002-300-871	Ground Jumper	2
H	3000-300-353	Roller Cap	2

Return To Table of Contents

Lift Header Assembly with Load Cells

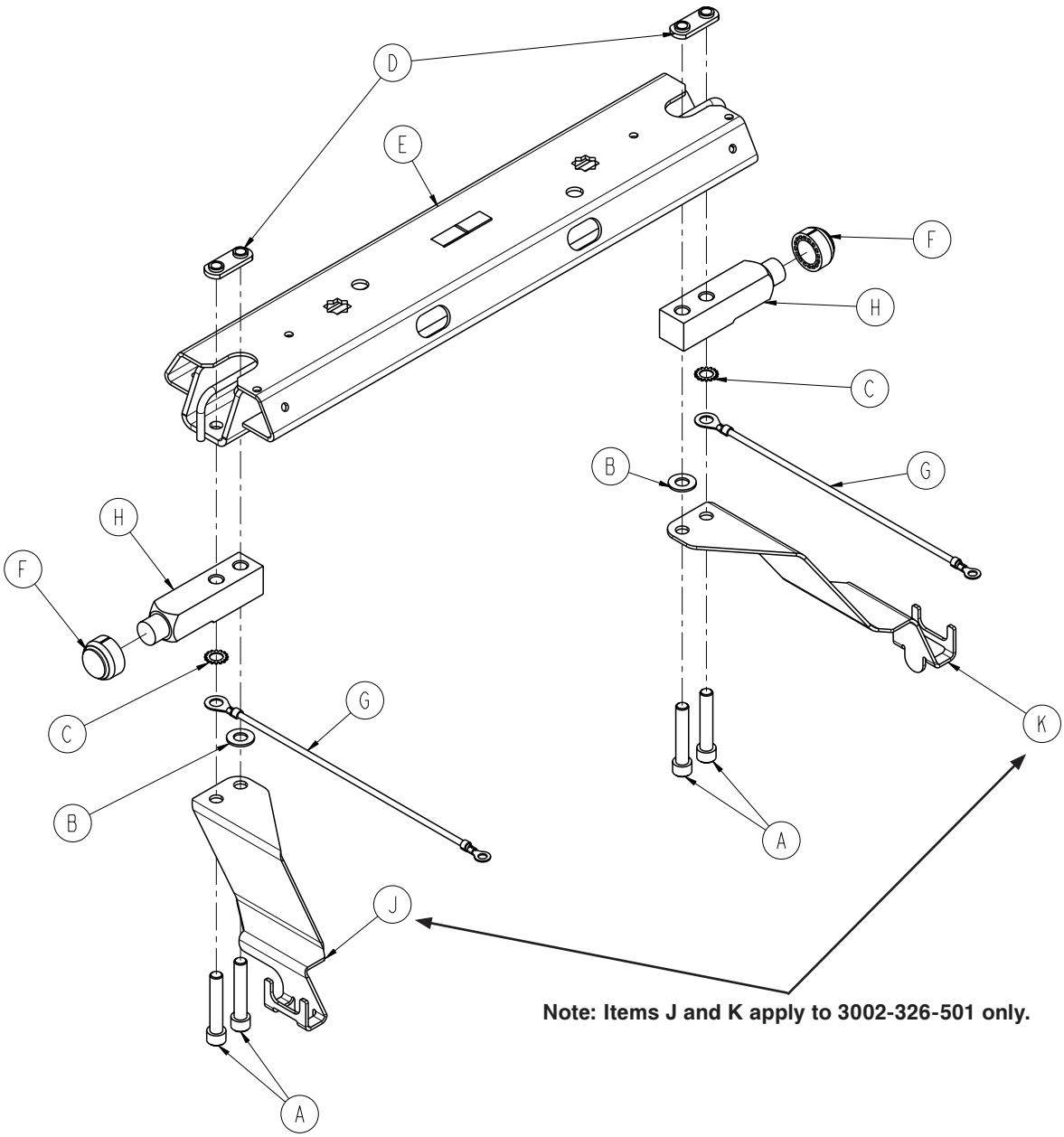

Lift Header, Head End - Load Cells - 3006-307-501

Item	Part No.	Part Name	Qty.
A	0004-288-000	Hex Soc. Hd. Cap Screw	4
B	0011-004-000	Flat Washer	4
C	0013-032-000	Ext. Tooth Lock Washer	2
D	3001-300-509	Weldnut	2
E	3006-301-530	Lift Header Assembly	1
F	3002-300-353	Roller Cap	2
G	3002-300-871	Ground Jumper	2
H	3002-307-057	Load Cell	2

Lift Header - Load Cells/Iso. Foley Hooks, Foot End - 3002-326-501

Item	Part No.	Part Name	Qty.
A	0004-288-000	Hex. Soc. Hd. Cap Screw	4
B	0011-004-000	Flat Washer	2
C	0013-032-000	Ext. Tooth Lock Washer	2
D	3001-300-509	Lift Header Weldnut	2
E	3006-301-530	Lift Header Assembly	1
F	3002-300-353	Roller Cap	2
G	3002-300-871	Ground Jumper	2
H	3002-307-057	Load Cell - 750 lbs	2
J	3002-326-010	Iso. Foley Bag Ass'y, LH	1
K	3002-326-020	Iso. Foley Bag Ass'y, RH	1

Return To Table of Contents

Gatch Motor Assembly

3001-300-420

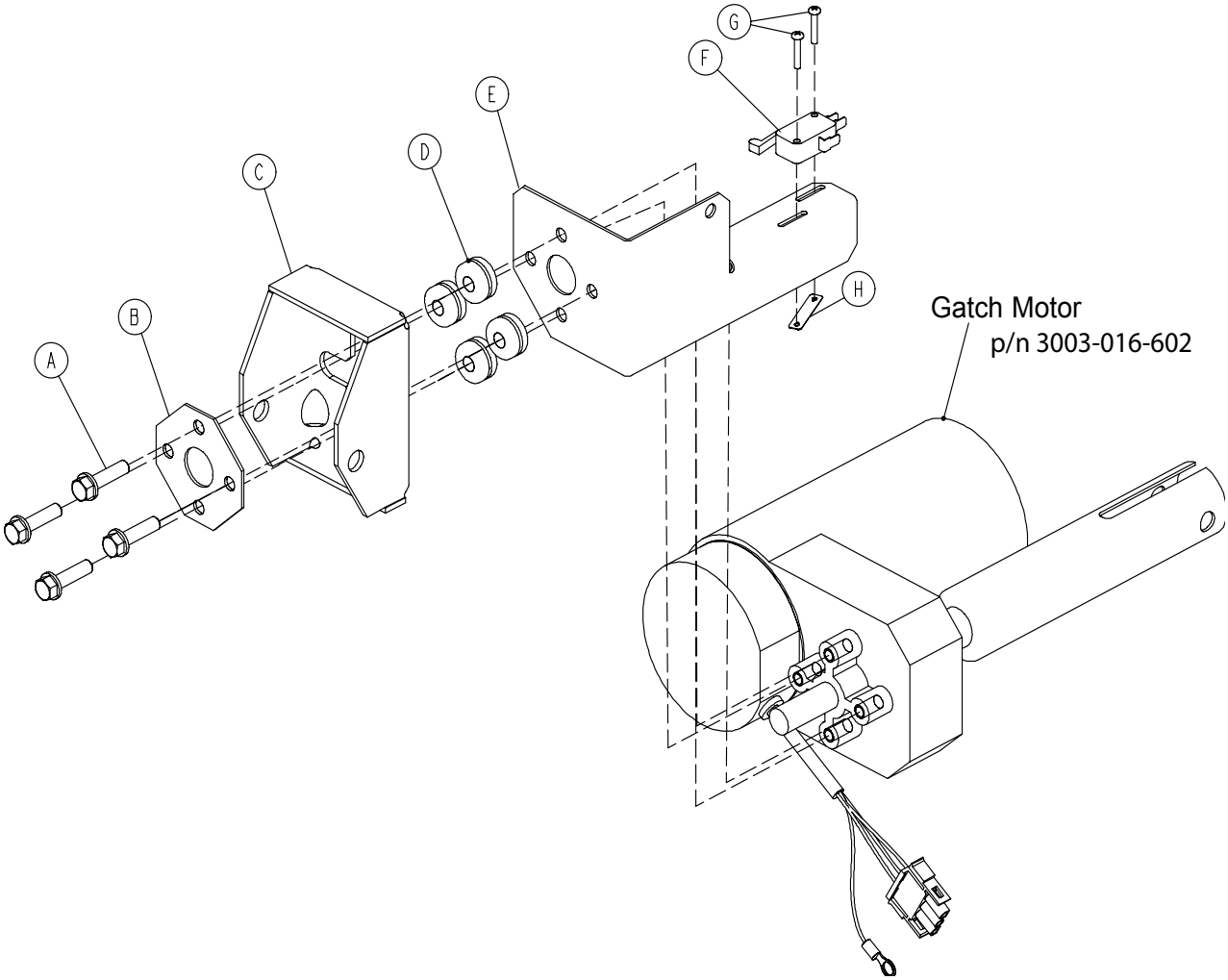

Item	Part No.	Part Name	Qty.
A	3001-200-228	Mounting Standoff	4
B	3001-300-499	Gatch Motor Mounting Plate	1
C	3001-300-225	Motor Mount Bracket	1
D	0052-817-000	Grommet	4
E	3002-300-421	Gatch Limit Bracket	1
F	3000-300-041	Micro Switch	1
G	0002-107-000	Phillips Round Head Screw	2
H	0016-069-000	Twin-Type Fastener	1
L	3000-300-114	Wire Tie (not shown)	1

Return To Table of Contents

For Reference Only: 3006-300-550

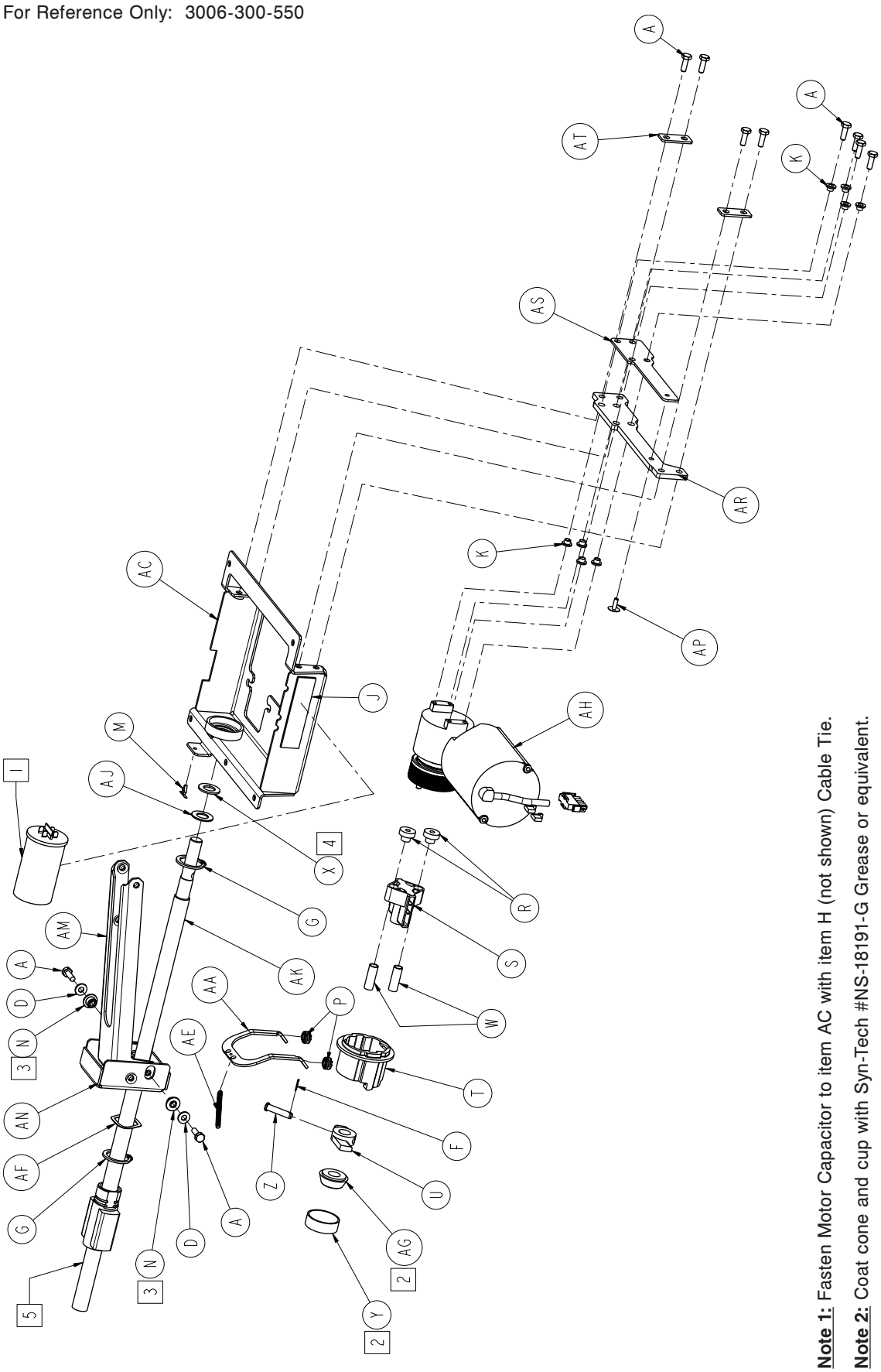

Note 1: Fasten Motor Capacitor to item AC with item H (not shown) Cable Tie.

Note 2: Coat cone and cup with Syn-Tech #NS-18191-G Grease or equivalent.

Note 3: After assembly, apply Syn-Tech #NS-18191-G Grease or equivalent to O.D. of items N (Litter Pivot Bushing.

Note 4: Apply Syn-Tech #NS-18191-G Grease or equivalent to both sides of item X.

Note 5: Apply Mobil #28 Grease to entire length of ball screw after assembly.

Return To Table of Contents

Fowler Actuator Assembly, Common Components - 3006-300-550

Item	Part No.	Part Name	Qty.
A	0003-214-000	Hex Head Cap Screw	10
F	0027-017-000	Cotter Pin	1
G	0028-120-000	External Retaining Ring	2
H	0038-151-000	Cable Tie	2
J	0044-029-000	Double-Sided Stick Tape (2”)	1
K	0052-718-000	Molded Nylon Insulator	8
M	0029-021-000	Dart Type Clip	1
N	3000-300-099	Litter Pivot Bushing	2
P	3000-300-442	Fowler Drive Grommet	4
R	3000-300-455	CPR Isolation Bushing	2
S	3000-300-456	CPR Isolator	1
T	3000-300-461	CPR Decoupler	1
U	3000-300-462	CPR Wing	1
W	3000-300-464	CPR Engagement Spring	2
X	3000-300-466	Thrust Bearing	1
Y	3000-300-471	CPR Tapered Bearing Housing	1
Z	3000-300-473	Clevis Pin	1
AA	3000-300-658	CPR Release Arm	1
AC	3006-303-485	Fowler Actuator Weldment	1
AE	3001-300-664	CPR Spring	1
AF	0038-478-000	Wave Spring	1
AG	3000-300-444	CPR Tapered Bearing	1
AH	3006-300-705	Fowler Actuator Assembly	1
AJ	0014-083-000	Flat Washer	1
AK	3000-300-457	CPR Ball Screw	1
AM	3006-301-496	Fowler Link	1
AN	3002-300-493	Fowler Link Bracket	1
AP	0025-092-000	Rivet	1
AR	3006-300-121	Motor Mount Isolator	1
AS	3006-300-122	Isolator Plate	1
AT	3006-300-123	Mounting Plate Tabs	2

Return To Table of Contents

Fowler Brake Kit Assembly -3001-300-775

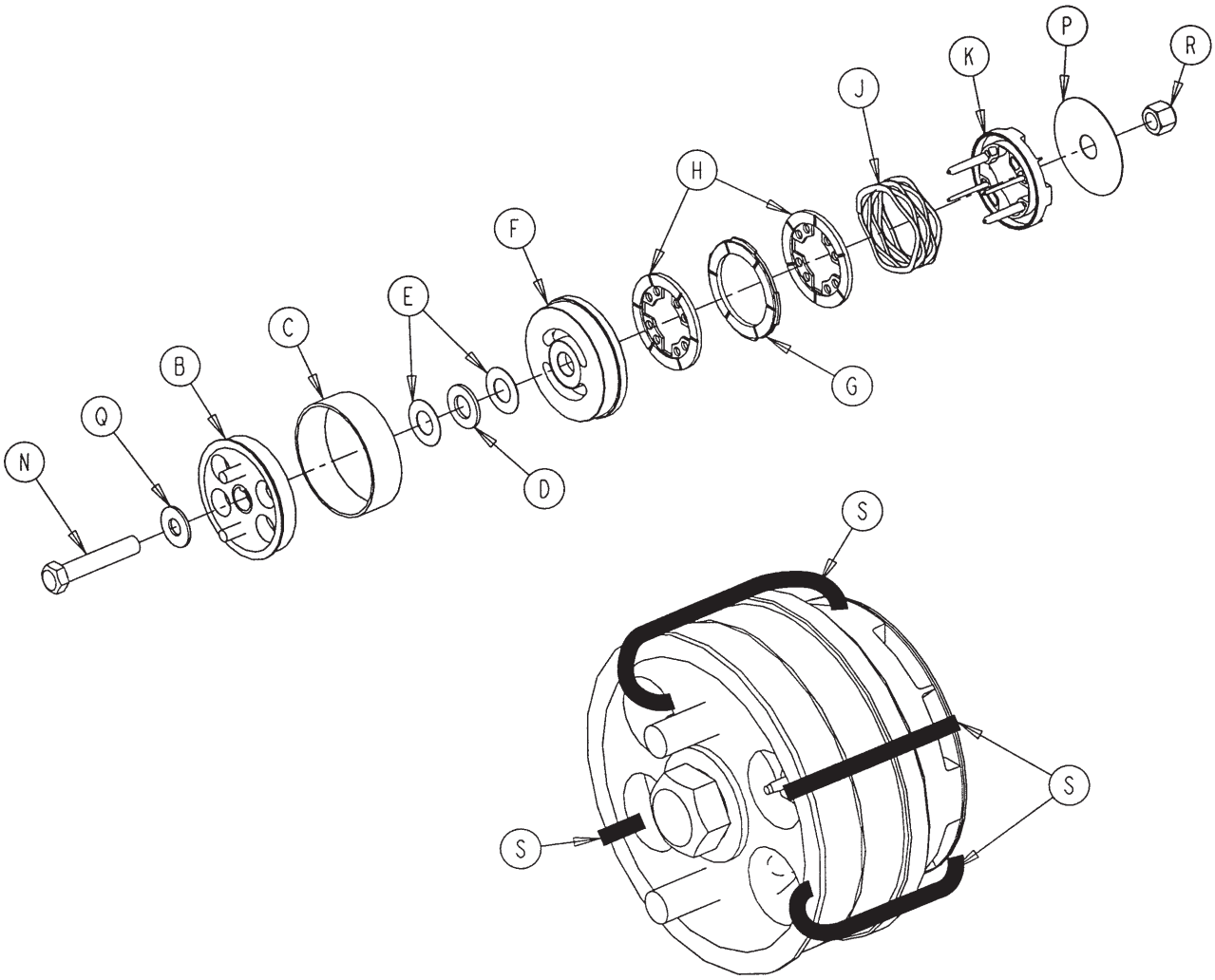

Item	Part No.	Part Name	Qty.
B	3001-300-455	CPR Coupler Assembly	1
C	3000-300-465	CPR Clutch Spring	1
D	0081-212-000	Thrust Needle Roller Brg.	1
E	3000-200-224	Idler Gear Thrust Washer	2
F	3001-300-569	Brake Cup	1
G	3001-300-552	CPR Brake Disc	1
H	3001-300-551	CPR Spring Cup	2
J	3001-300-563	CPR Brake Spring	1
K	3001-300-570	CPR Spring Cup	1
N	0003-064-000	Hex Head Cap Screw	1
P	3000-300-776	Flat Washer	1
Q	0011-193-000	Heavy Flat Washer	1
R	0016-035-000	Nylock Nut	1
S	3000-300-113	8” Wire Tie	4

Return To Table of Contents

Standard Bed Fowler Limit Switch Assembly - 3002-343-035

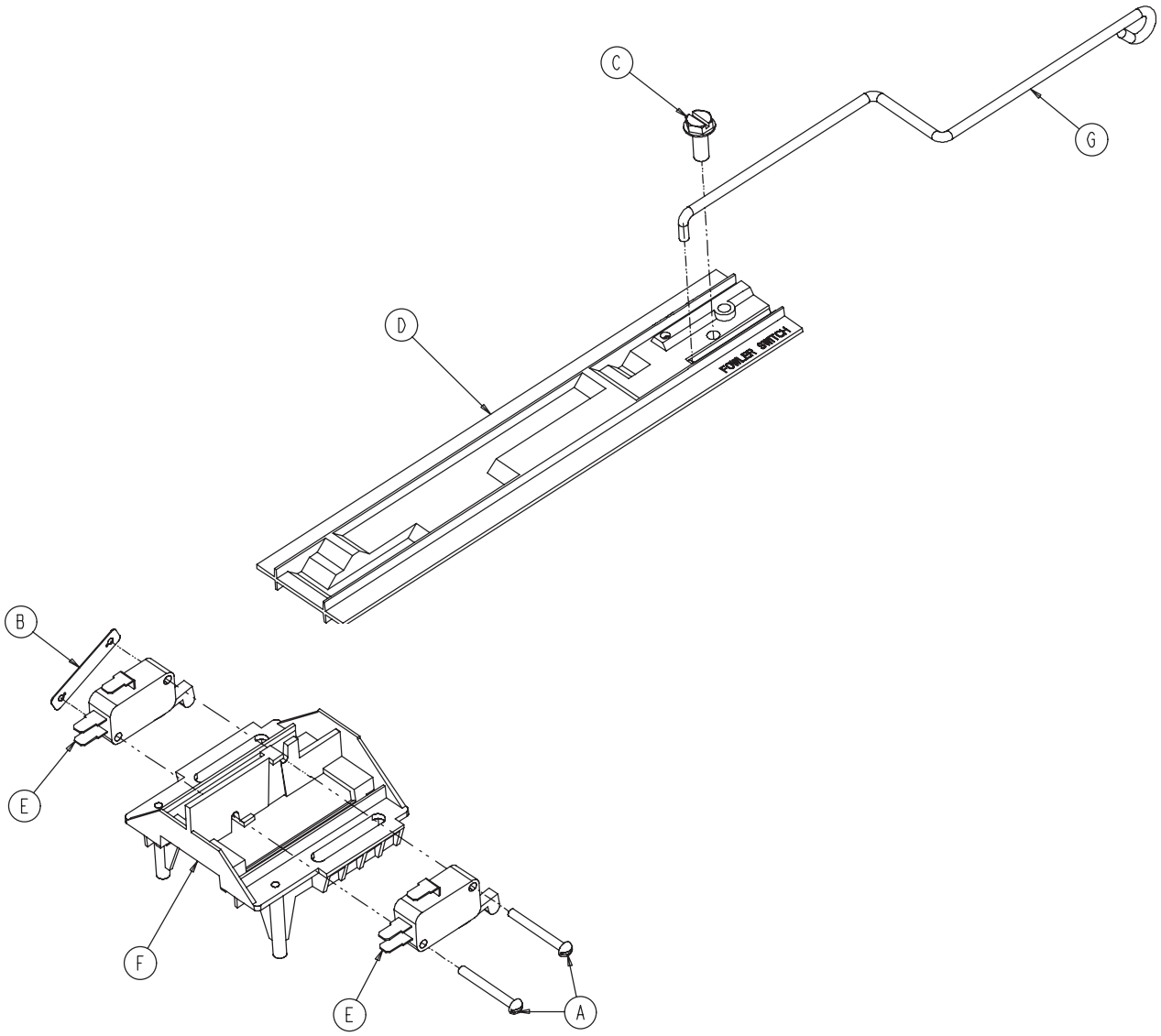

Item	Part No.	Part Name	Qty.
A	0002-003-000	Round Head Screw	2
B	0016-069-000	Twin Type Fastener	1
C	0016-129-000	Hex Washer Head Screw	1
D	3000-300-036	Fowler Cam Card	1
E	3000-300-041	Micro Switch	2
F	3000-300-044	Cam Guide	1
G	3002-300-038	Link Wire	1

Return To Table of Contents

Night Light Assembly - 3006-410-020

LH bottom side of moving frame (3006-300-204)

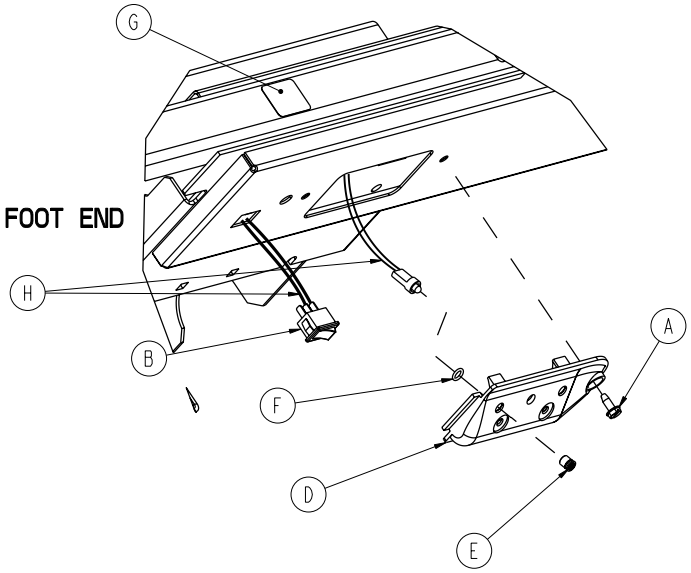

RH bottom side of moving frame (3006-300-204)
(No toggle switch required on RH side of bed.)

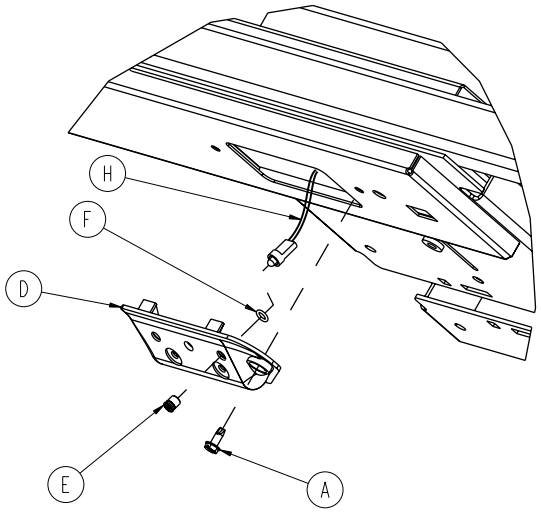

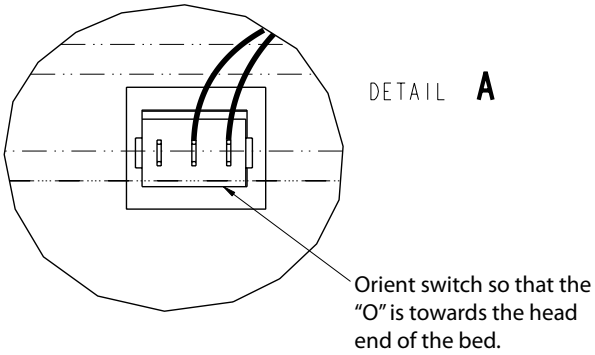

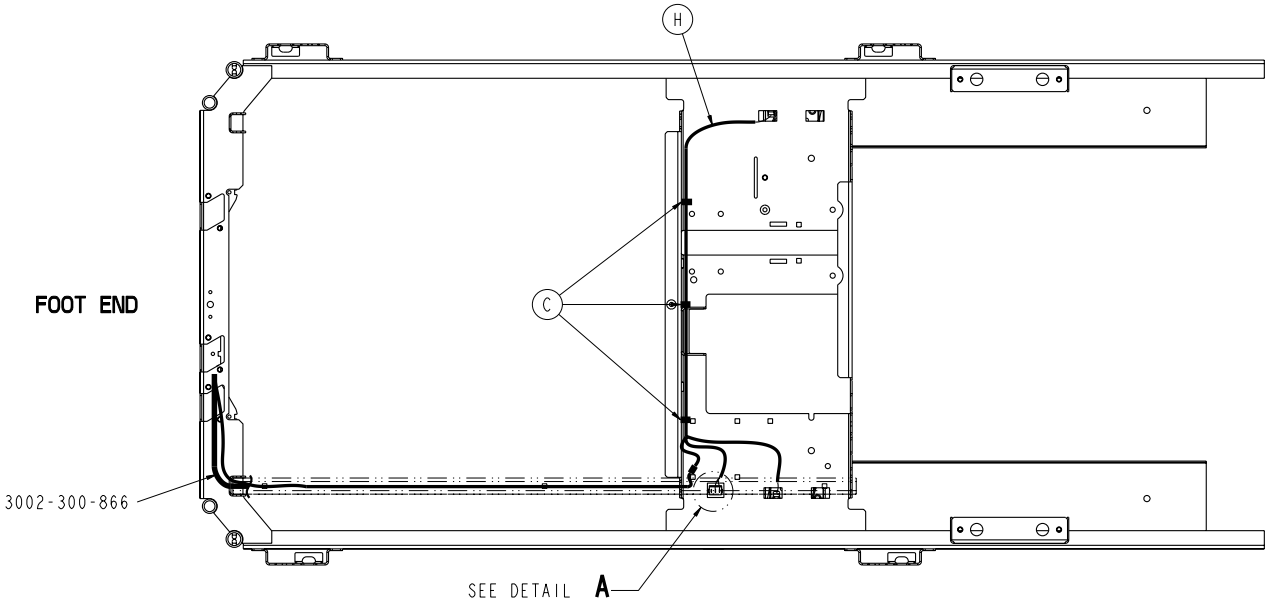

TOP VIEW

Return To Table of Contents

Night Light Assembly - 3006-410-020

Item	Part No.	Part Name	Qty.
A	0003-224-000	Hex Washer Head Screw	2
B	0059-191-000	Toggle Switch	1
C	3000-300-113	8” Cable Tie	3
D	3002-310-018	Night Light Cover	2
E	3002-310-010	LED Lens	4
F	3002-310-025	Retaining Spacer	2
G	3006-310-601	Night Light Label	1
H	3002-036-801	Night Light Wiring Harness	1

Return To Table of Contents

Optional 110V Outlet Assembly - 3006-320-050

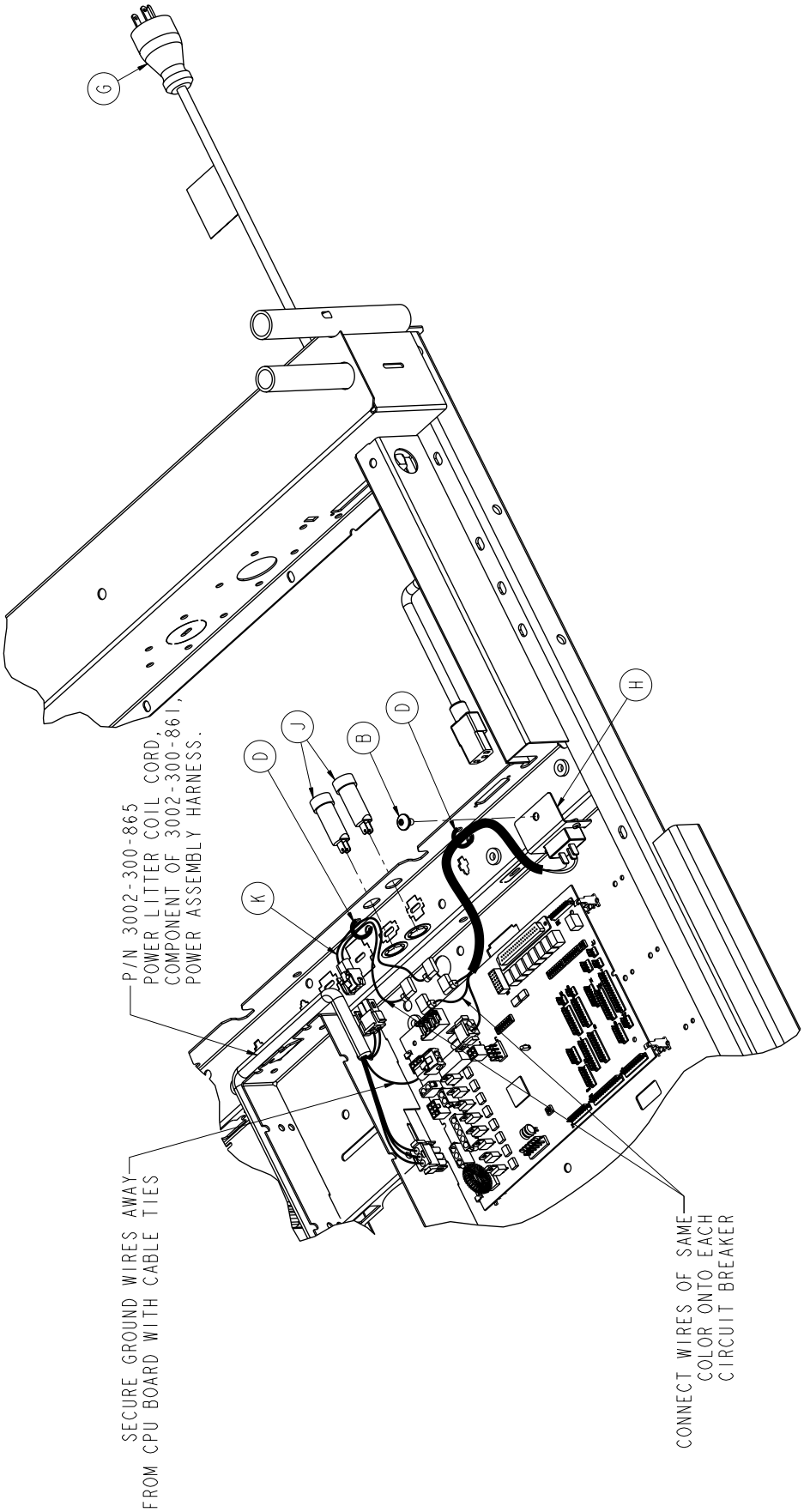

Return To Table of Contents

Optional 110V Outlet Assembly - 3006-320-050

Item	Part No.	Part Name	Qty.
A	0003-224-000	Hex Washer Head Screw	2
B	0007-053-000	Truss Head Torx	1
C	0030-027-000	Straight Thru Strain Relief Bushing	1
D	3000-300-113	8” Cable Tie	5
E	3006-320-060	115V Outlet Box Assembly	1
F	3006-320-626	115V Outlet Label	1
G	3002-320-801	Power Cord	1
H	3002-320-878	115V Outlet Power Inlet Cable	1
J	0059-196-000	Circuit Breaker with Clip Retainer	2
K	3002-320-803	115V Power Jumper Cable	1
L	3002-320-625	Electrical Shock Hazard Label	1
M	3006-508-015	115V Option Label	1

Return To Table of Contents

110V Outlet Box Assembly - 3006-320-060

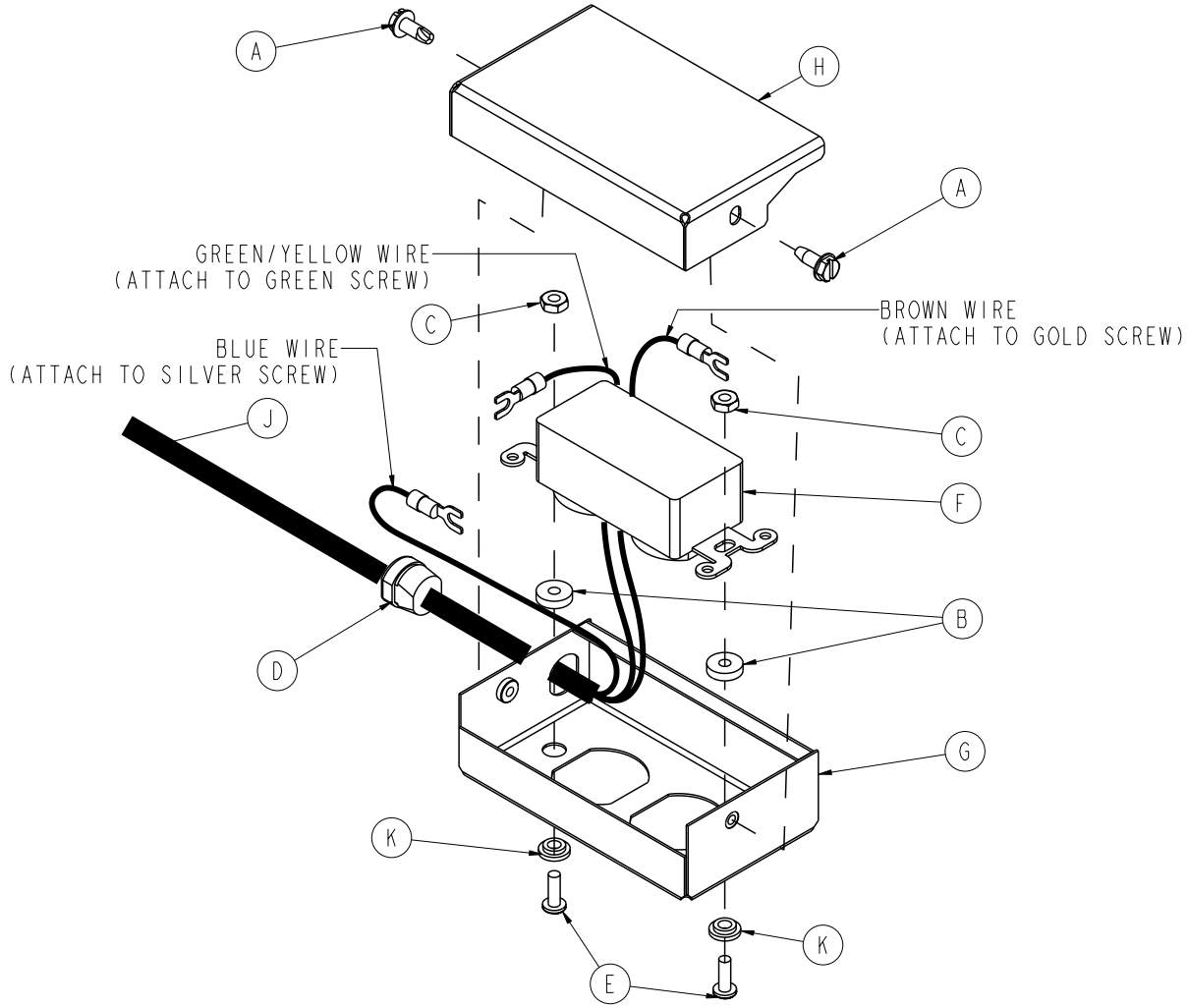

Item	Part No.	Part Name	Qty.
A	0003-224-000	Hex Washer Head Screw	2
B	0052-318-000	Unthreaded Round Spacer	2
C	0016-014-000	Fiberlock Nut	2
D	0034-133-000	Strain Relief	1
E	0004-265-000	Button Head Cap Screw	2
F	0059-733-000	Hospital Grade Receptacle	1
G	3006-321-000	115V Outlet Box	1
H	3006-321-021	115V Outlet Box Cover	1
J	3002-320-802	115V Outlet Cable	1
K	0052-317-000	Short Barrel Shoulder Washer	2

Return To Table of Contents

Optional Scale/Bed Exit Assembly

For Reference Only: 3006-317-003

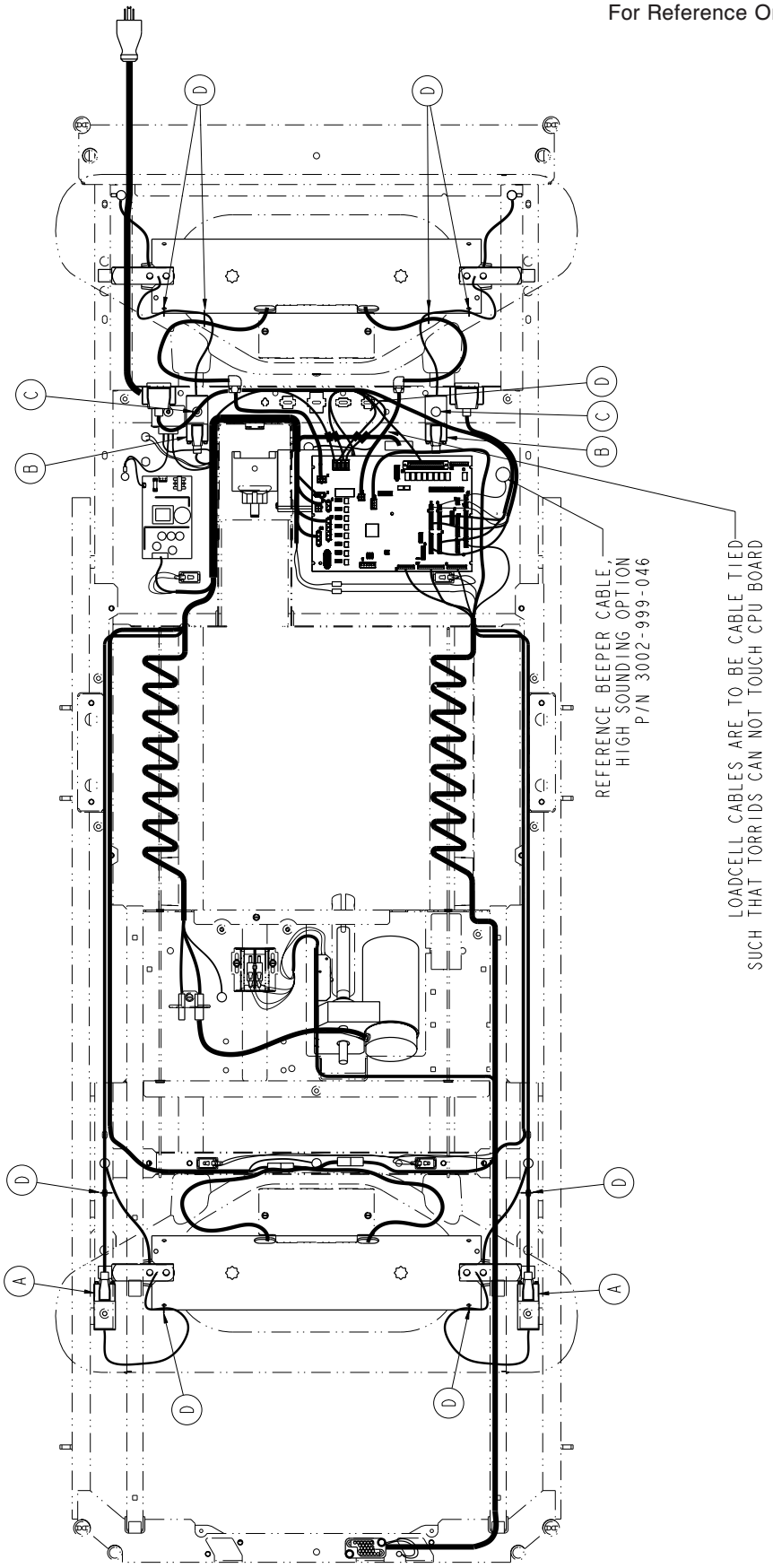

Return To Table of Contents

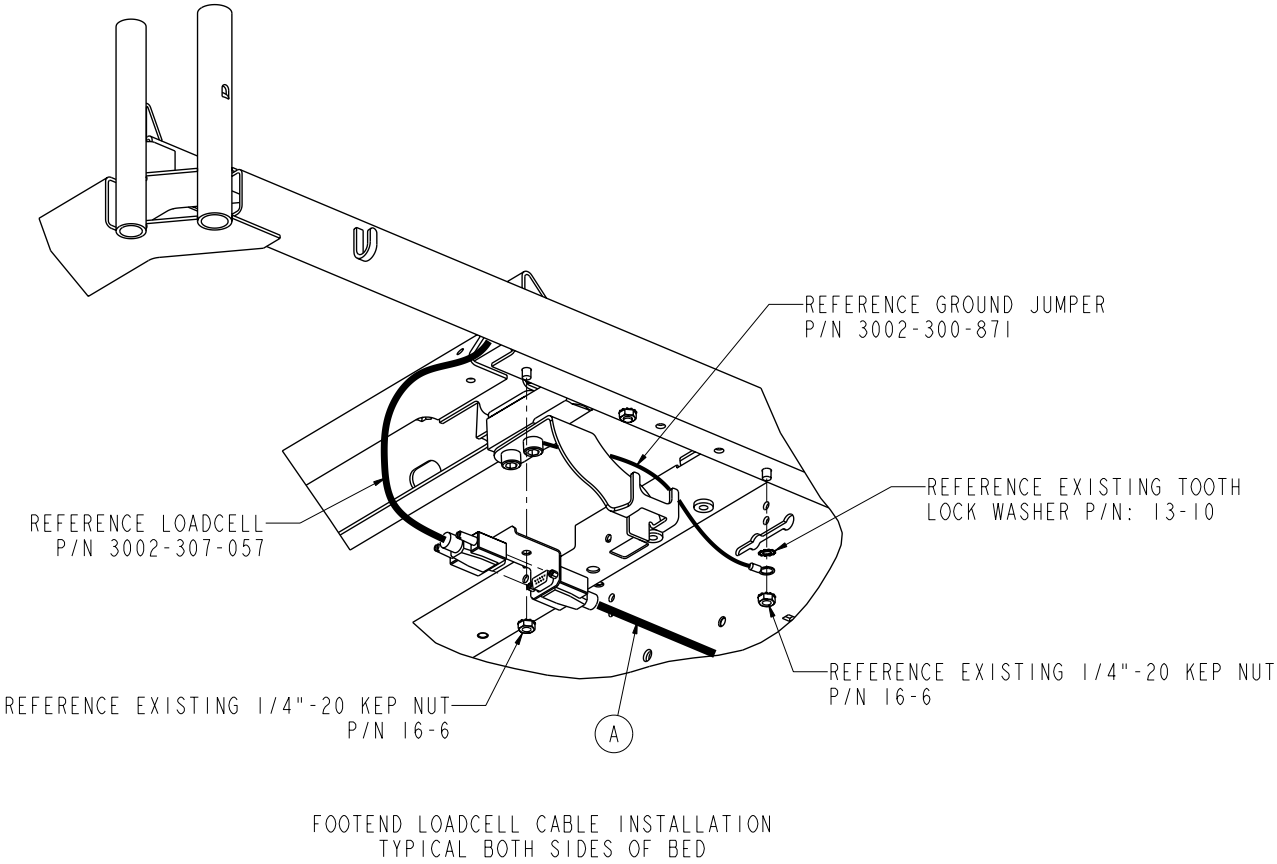

Foot End Load Cell Cable Installation
(Typical Both Sides of the Bed)

Item	Part No.	Part Name	Qty.
A	3002-317-835	FE Load Cell Cable	2
B	3002-317-834	HE Load Cell Cable	2
C	0007-053-000	Truss Head Torx	2
D	3000-300-113	8” Cable Tie	9

Return To Table of Contents

Optional Litter Assembly, Communication Capability

For Reference Only: 3006-303-122

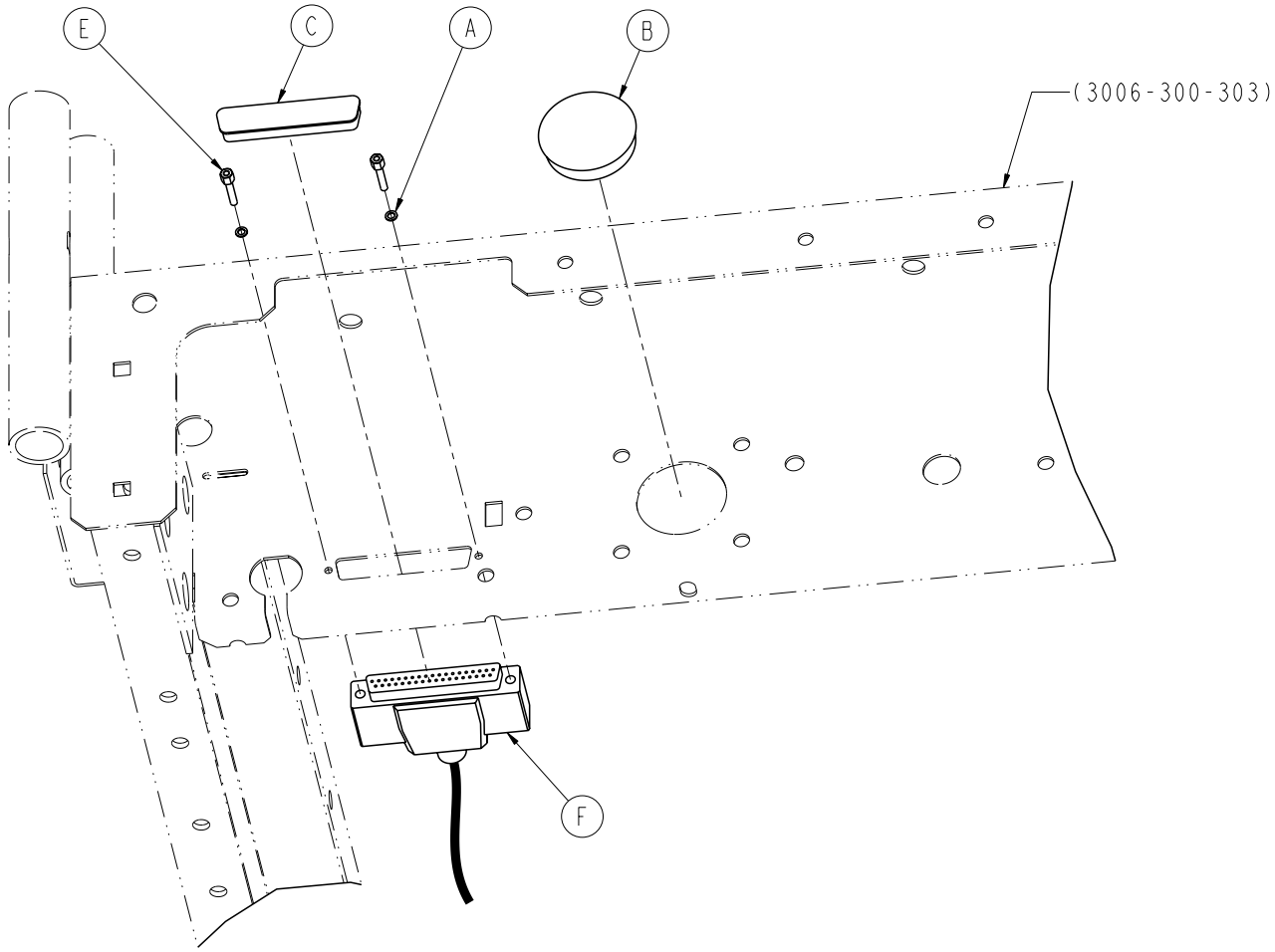

Return To Table of Contents

Optional Litter Assembly, Communication Capability

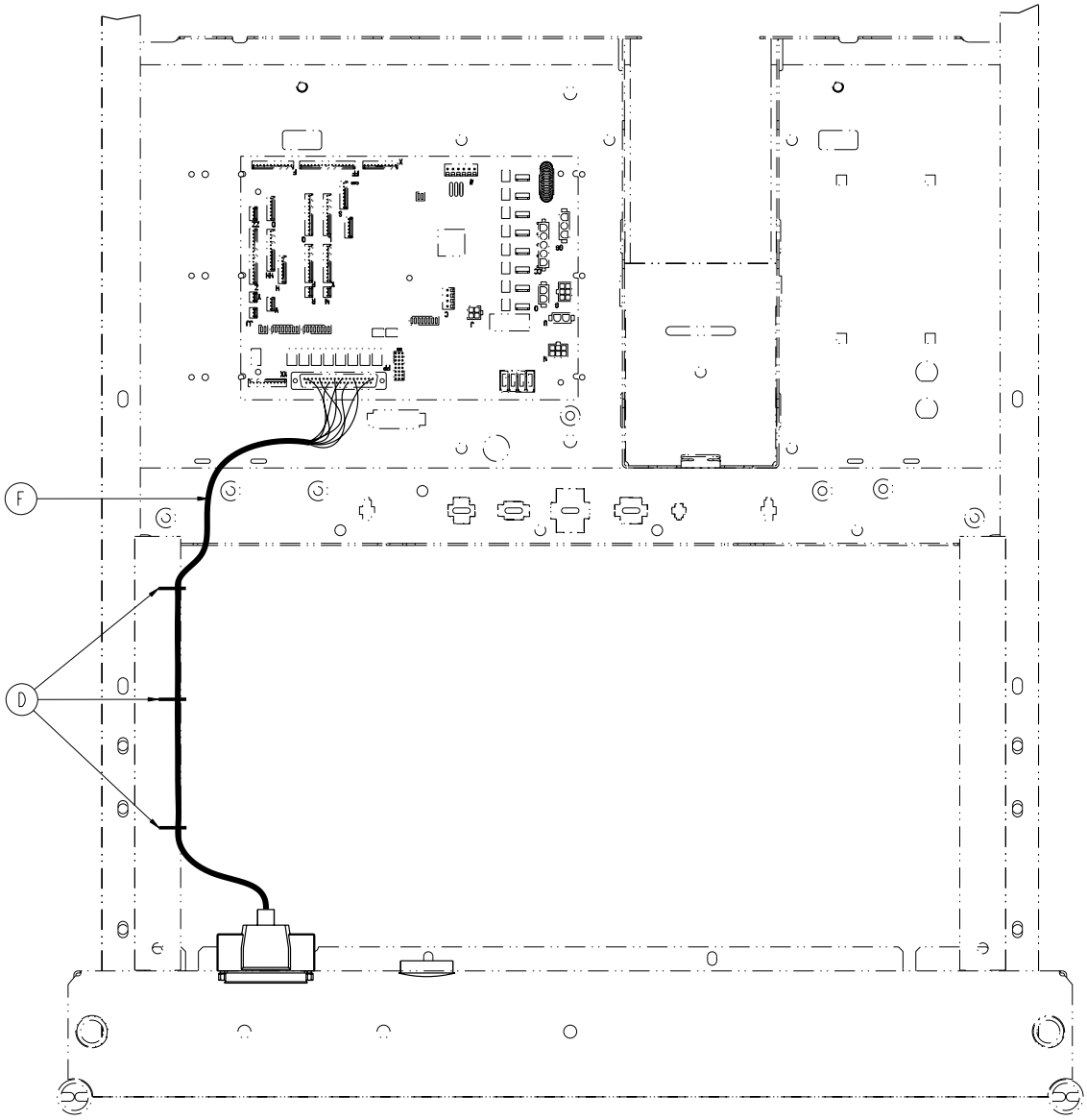

Optional Litter Assembly, Communication Capability - 3006-303-122 (Reference Only)

Item	Part No.	Part Name	Qty.
A	0012-046-000	Split Lock Washer	2
B	0037-220-000	Hole Plug	1
C	0059-710-000	Caplug	1
D	3000-300-113	8” Cable Tie	3
E	3001-300-007	Screwjack	2
F	3001-303-821	Headwall Interface Cable	1

Return To Table of Contents

For Reference Only: 3006-303-052

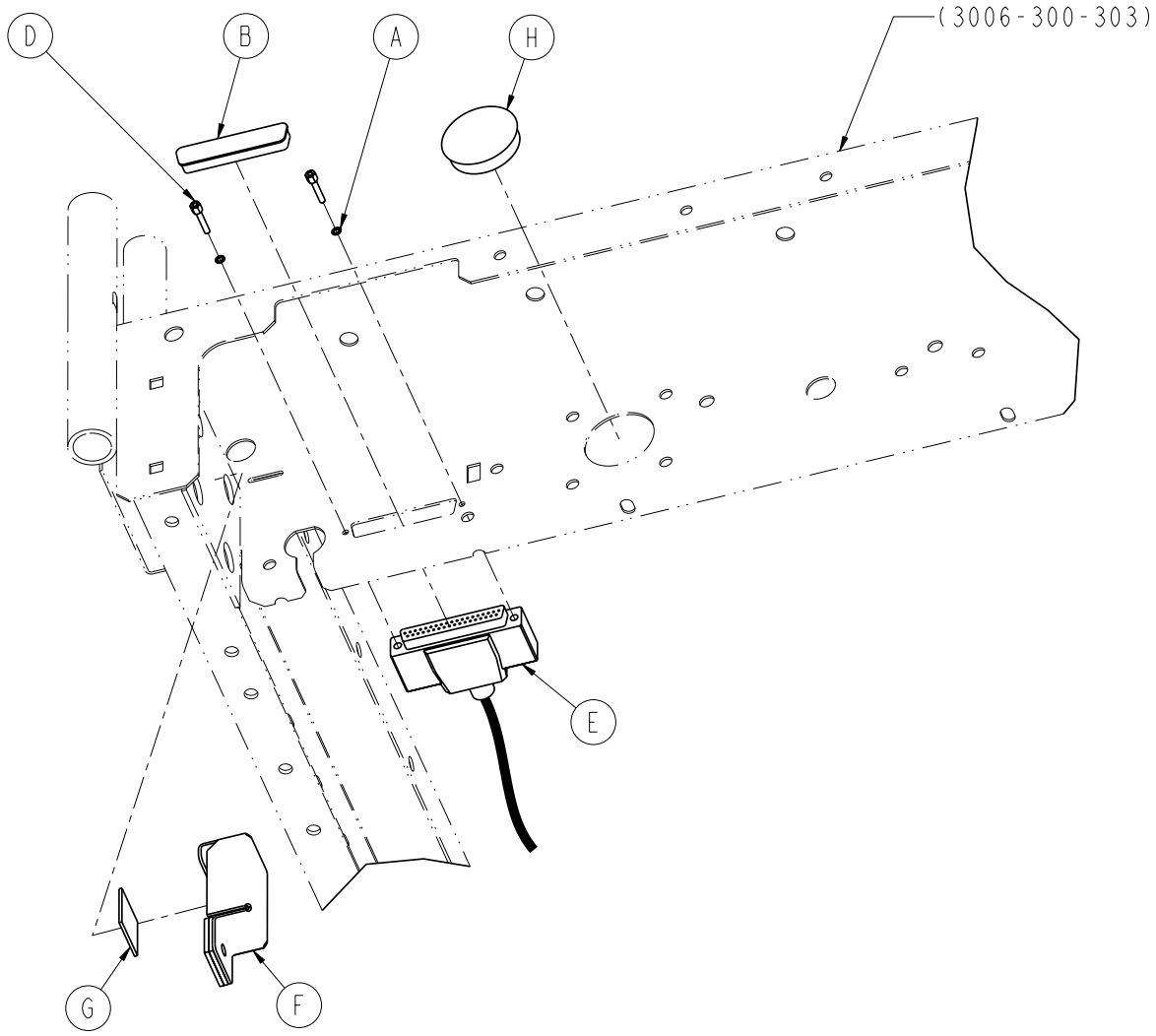

Return To Table of Contents

Optional Litter Assembly, Nurse Call and Communication

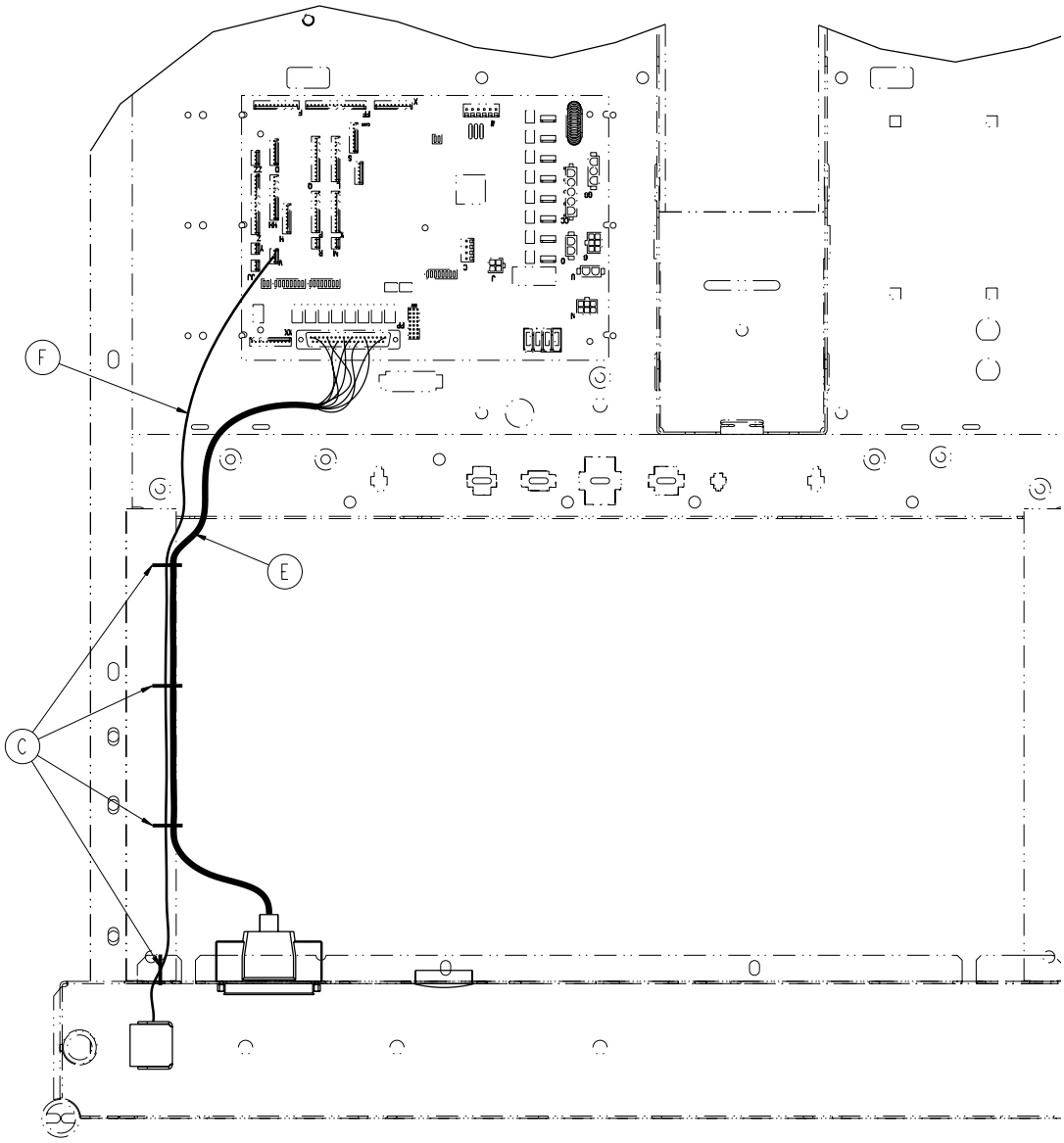

Optional Litter Assembly, Nurse Call and Communication - 3006-303-052 (Reference Only)

Item	Part No.	Part Name	Qty.
A	0012-046-000	Lock Washer	2
B	0059-710-000	Static 6 Plug	1
C	3000-300-113	Cable Tie	4
D	3001-300-007	Screwjack	2
E	3001-303-821	Headwall Interface Cable	1
F	3006-303-045	Battery Enclosure Assembly	1
G	0044-029-000	1” Tape	1
H	0037-220-000	Hole Plug	1

Return To Table of Contents

Optional Litter Assembly, HWI with 1 Stryker Port

For Reference Only: 3006-314-012

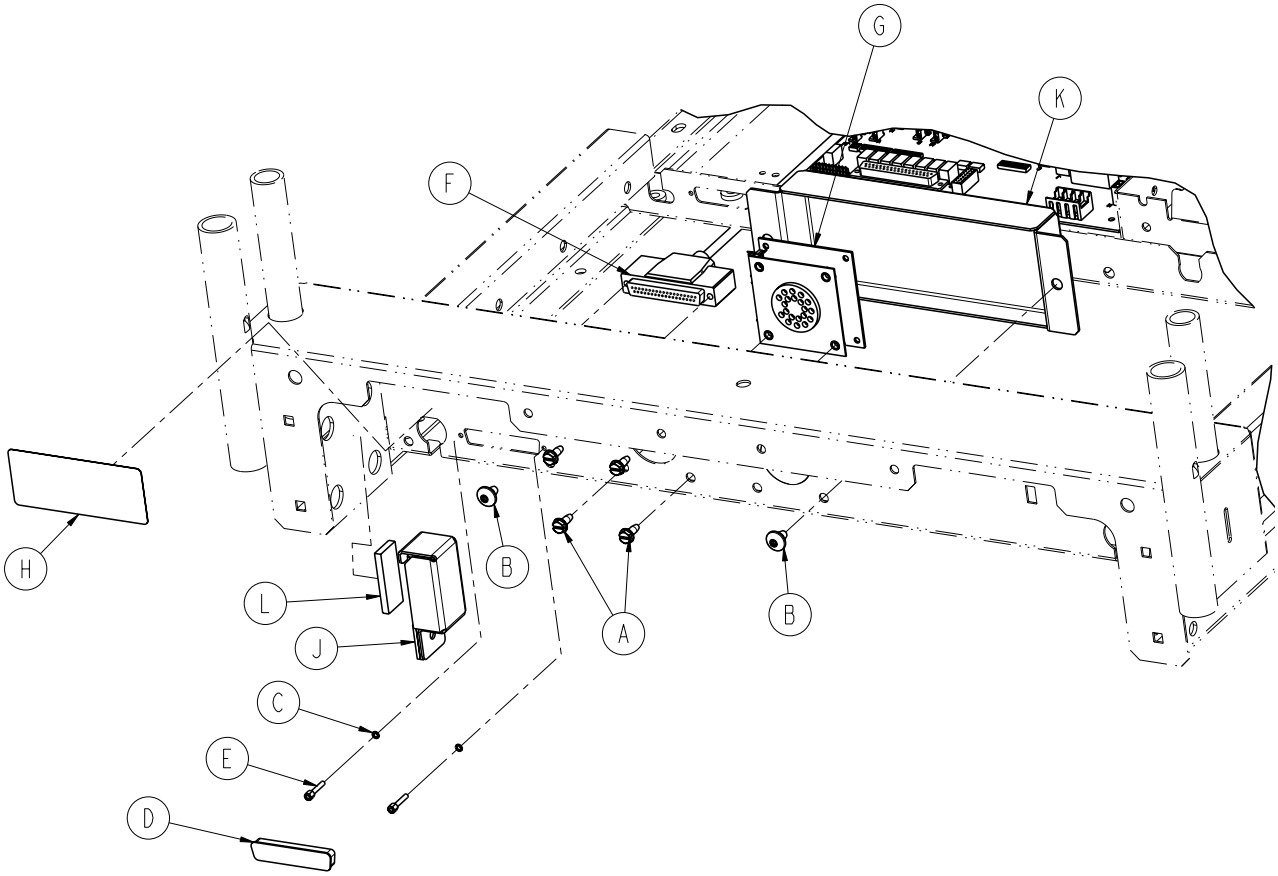

Return To Table of Contents

Optional Litter Assembly, HWI with 1 Stryker Port

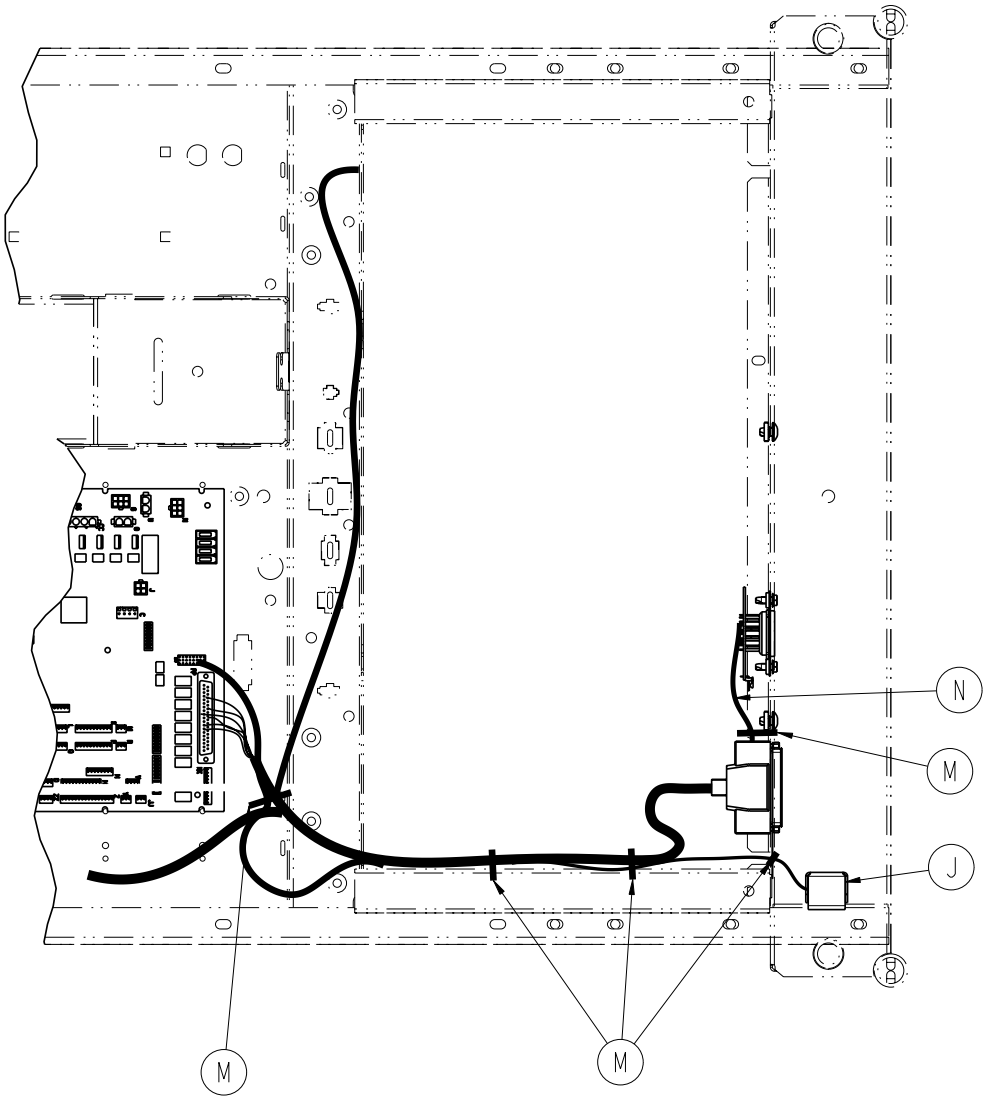

Optional Litter Assembly, HWI with 1 Stryker Port - 3006-314-012 (Reference Only)

Item	Part No.	Part Name	Qty.
A	0003-224-000	Hex Washer Head Screw	4
B	0007-053-000	Truss Head Screw	2
C	0012-046-000	Lock Washer	2
D	0059-710-000	Static Plug	1
E	3001-300-007	Screwjack	2
F	3001-303-821	Headwall Interface Cable	1
G	3001-314-920	HWI Pendant Port PCB	1
H	3006-090-028	Cord Out Label	1
J	3006-303-045	Battery Enclosure Assembly	1
K	3006-315-006	Pendant Port Cover	1
L	0044-029-000	Foam Tape (1.0”)	1
M	3000-300-113	8” Cable Tie	5
N	3002-314-821	Pendant Port Cable	1

Return To Table of Contents

Optional Litter Assembly, Nurse Call and 1/4” Port

For Reference Only: 3006-314-013

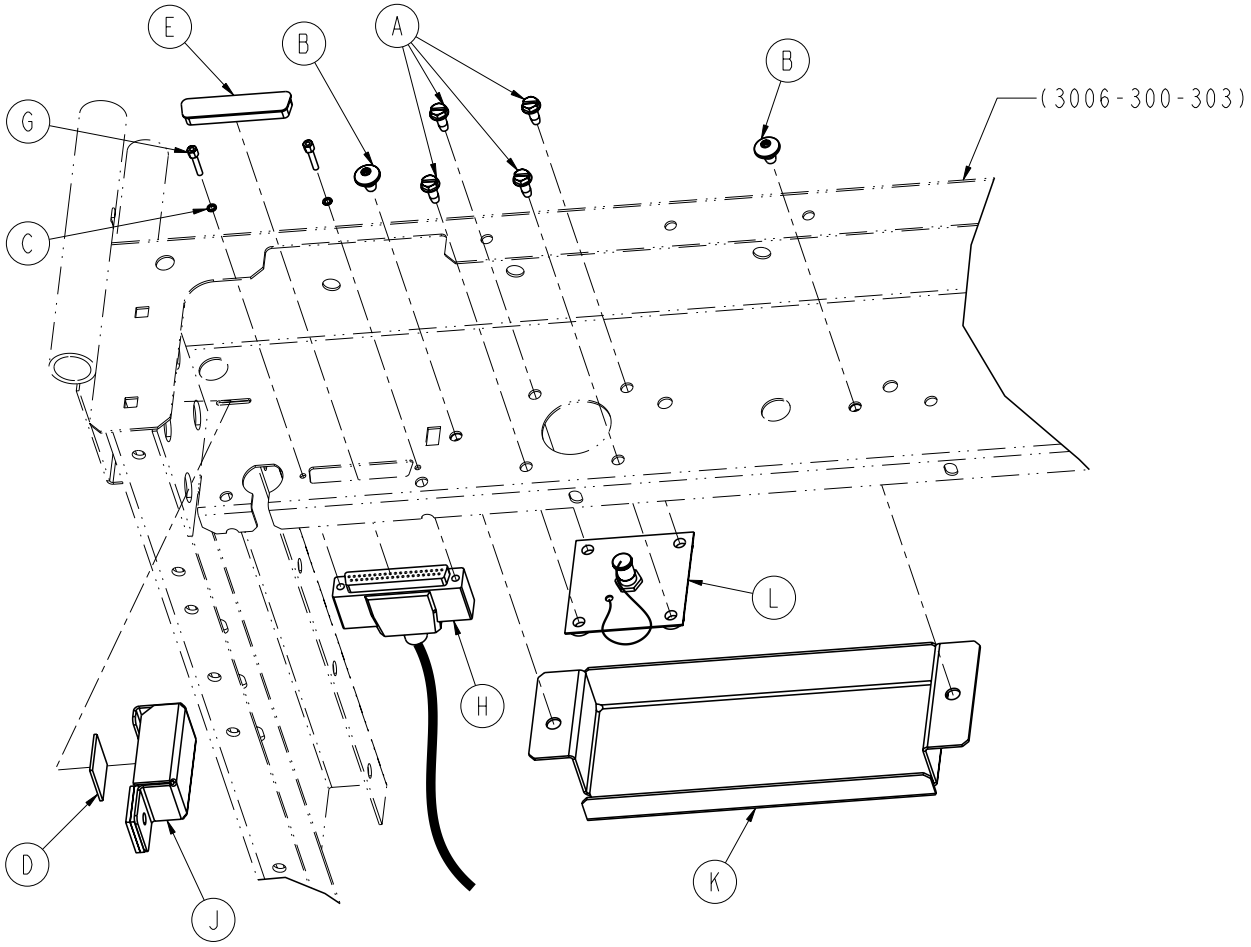

Return To Table of Contents

Optional Litter Assembly, Nurse Call and 1/4” Port

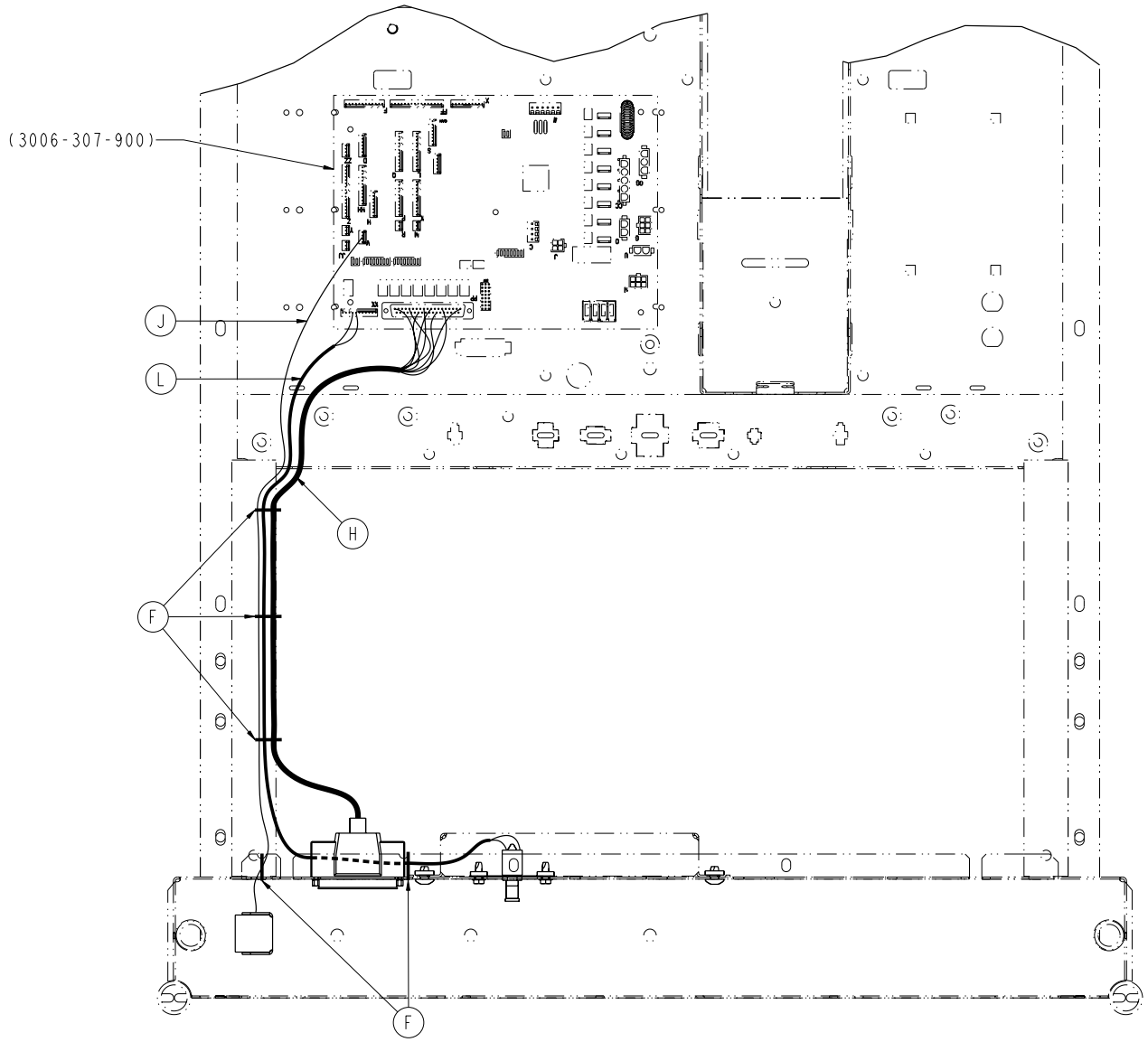

Optional Litter Assembly, Nurse Call and 1/4” Port - 3006-314-013 (Reference Only)

Item	Part No.	Part Name	Qty.
A	0003-224-000	Hex Screw, #10-24 x 1/2”	4
B	0007-053-000	Truss Head Screw, 1/4”-20 x 3/8”	2
C	0012-046-000	Split Lock Washer	2
D	0044-029-000	1” Tape	1
E	0059-710-000	Caplug	1
F	3000-300-113	8” Cable Tie	5
G	3001-300-007	Screwjack	2
H	3001-303-821	Head Interface Cable	1
J	3006-303-045	Battery Enclosure Assembly	1
K	3006-315-006	Pendant Port Cover, White	1
L	3006-383-100	1/4” Headwall Interface Port Ass’y	1

Return To Table of Contents

Optional Zoom® Litter Assembly, Headwall Communication

For Reference Only: 3006-031-200

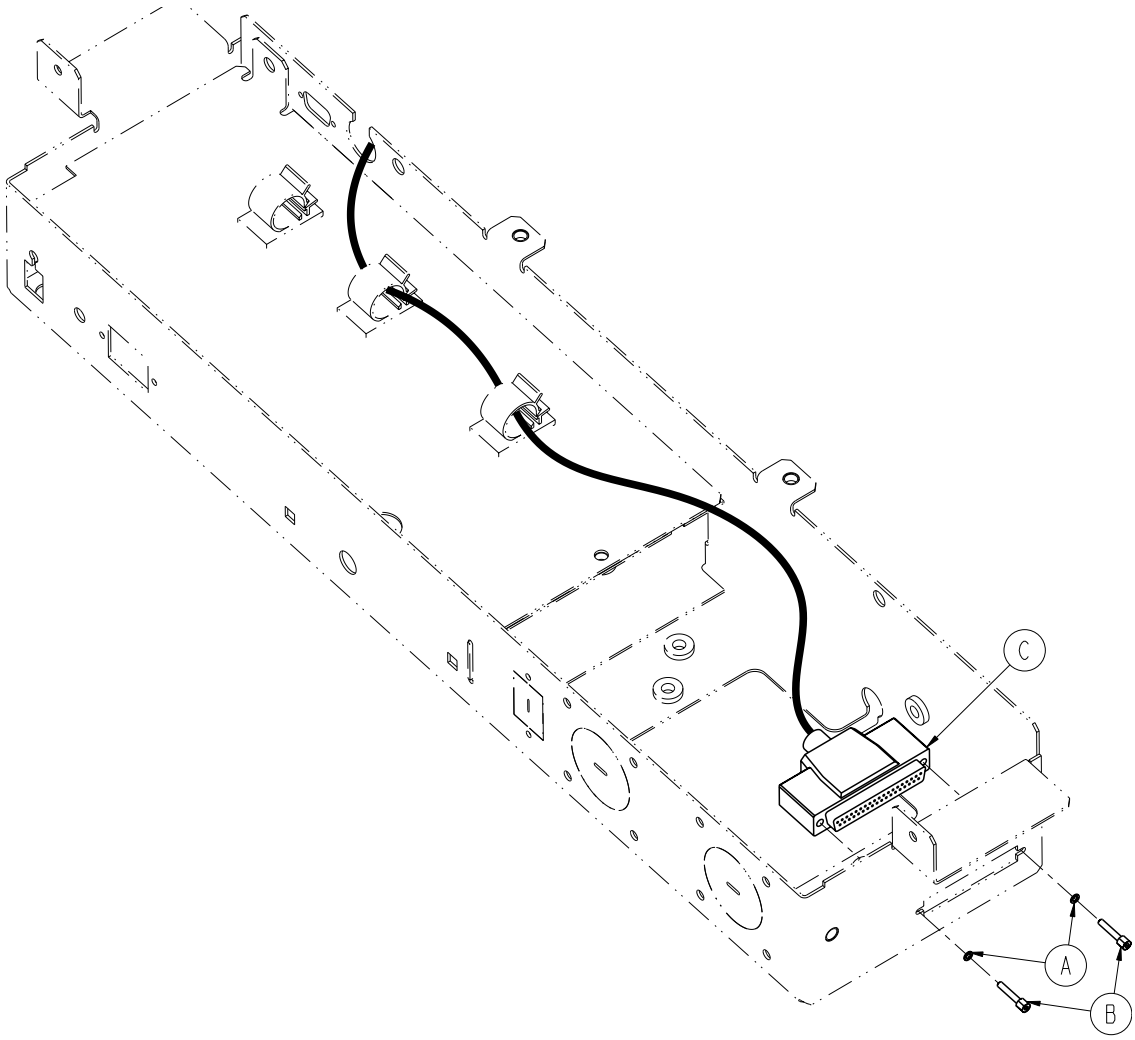

Return To Table of Contents

Optional Zoom® Litter Assembly, Headwall Communication

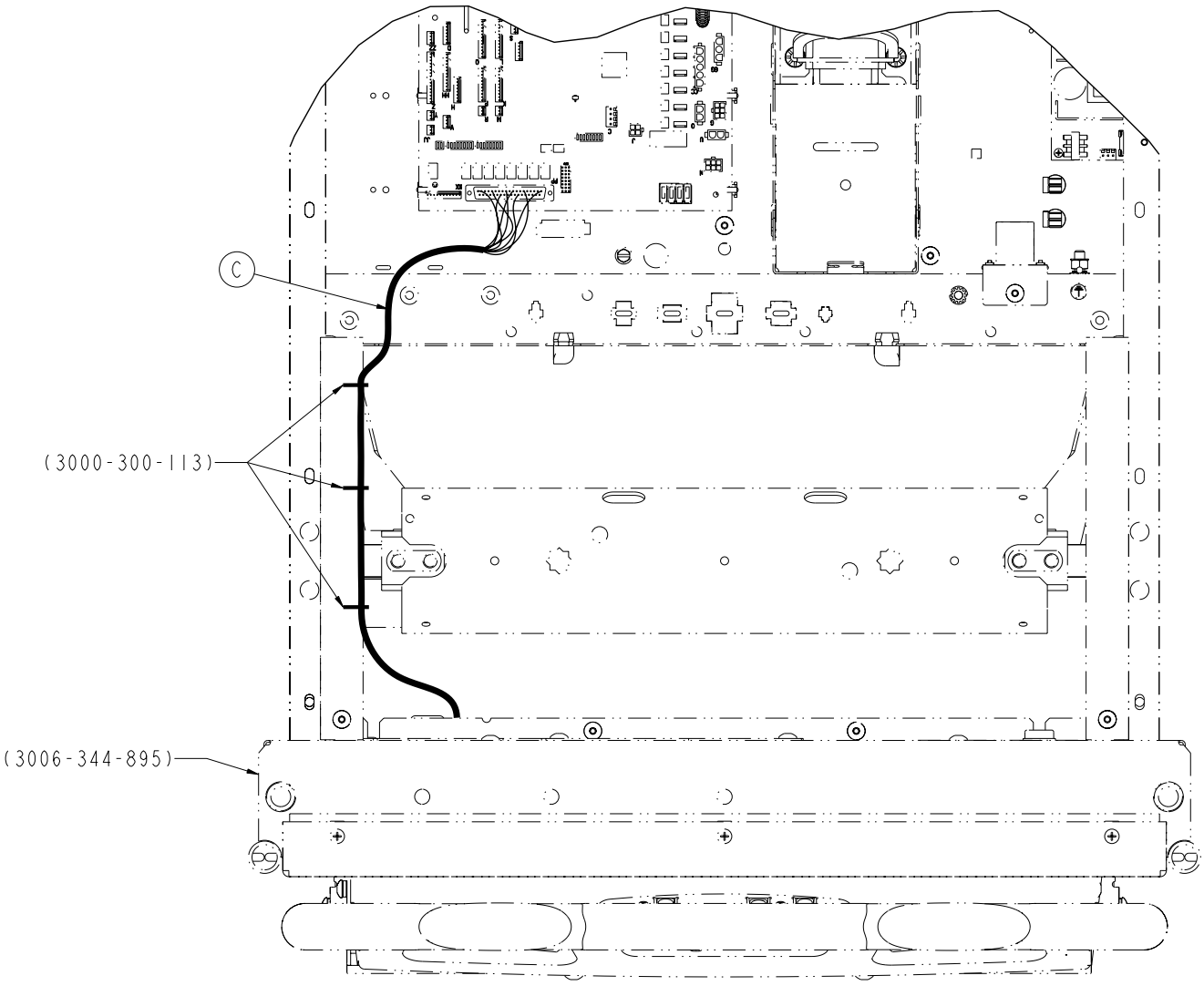

Optional Zoom® Litter Assembly, Headwall Communication - 3006-031-200 (Reference Only)

Item	Part No.	Part Name	Qty.
A	0012-046-000	Split Lock Washer	2
B	3001-300-007	Screwjack	2
C	3002-080-008	Headwall (Zoom®) Interface Cable	1

Return To Table of Contents

Optional Battery Backup/Zoom® Litter Assembly, HWI w/Nurse Call

For Reference Only: 3006-031-201

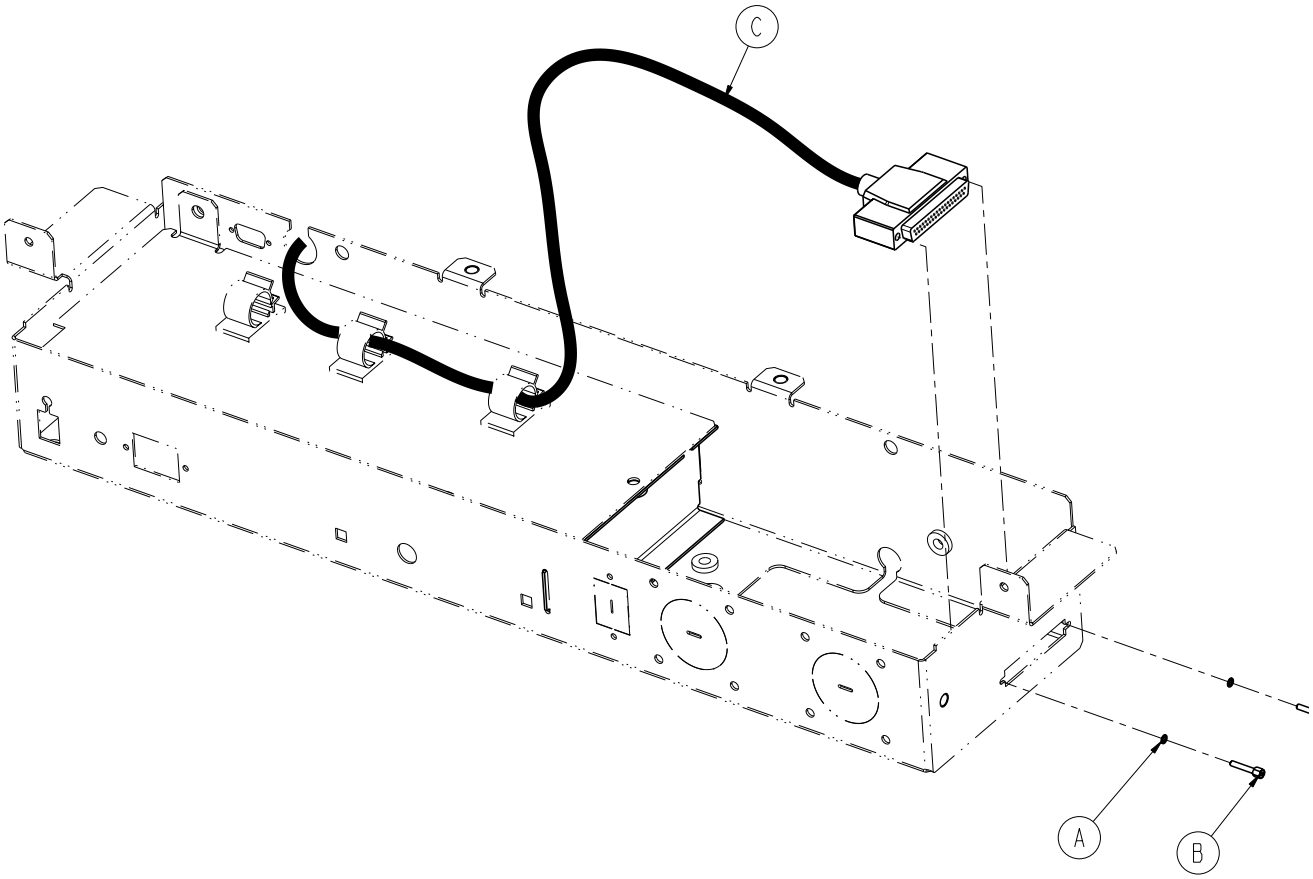

Return To Table of Contents

Optional Battery Backup/Zoom® Litter Assembly, HWI w/Nurse Call

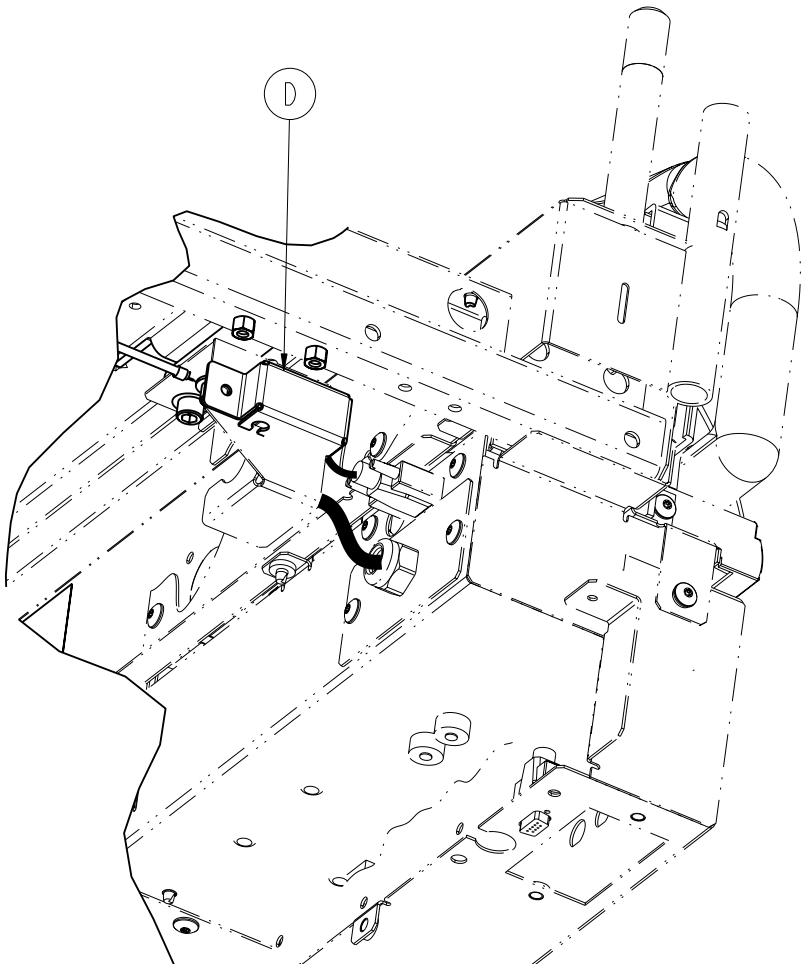

Optional Zoom® Litter Assembly, HWI with Nurse Call - 3006-031-201 (Reference Only)

Item	Part No.	Part Name	Qty.
A	0012-046-000	Lock Washer	2
B	3001-300-007	Screwjack	2
C	3002-080-008	Headwall (Zoom®) Interface Cable	1
D	3006-303-045	Battery Enclosure Assembly	1

Return To Table of Contents

Optional Battery Backup/Zoom® Litter Assembly, HWI w/Nurse Call & 1 Stryker Port

For Reference Only: 3006-031-202

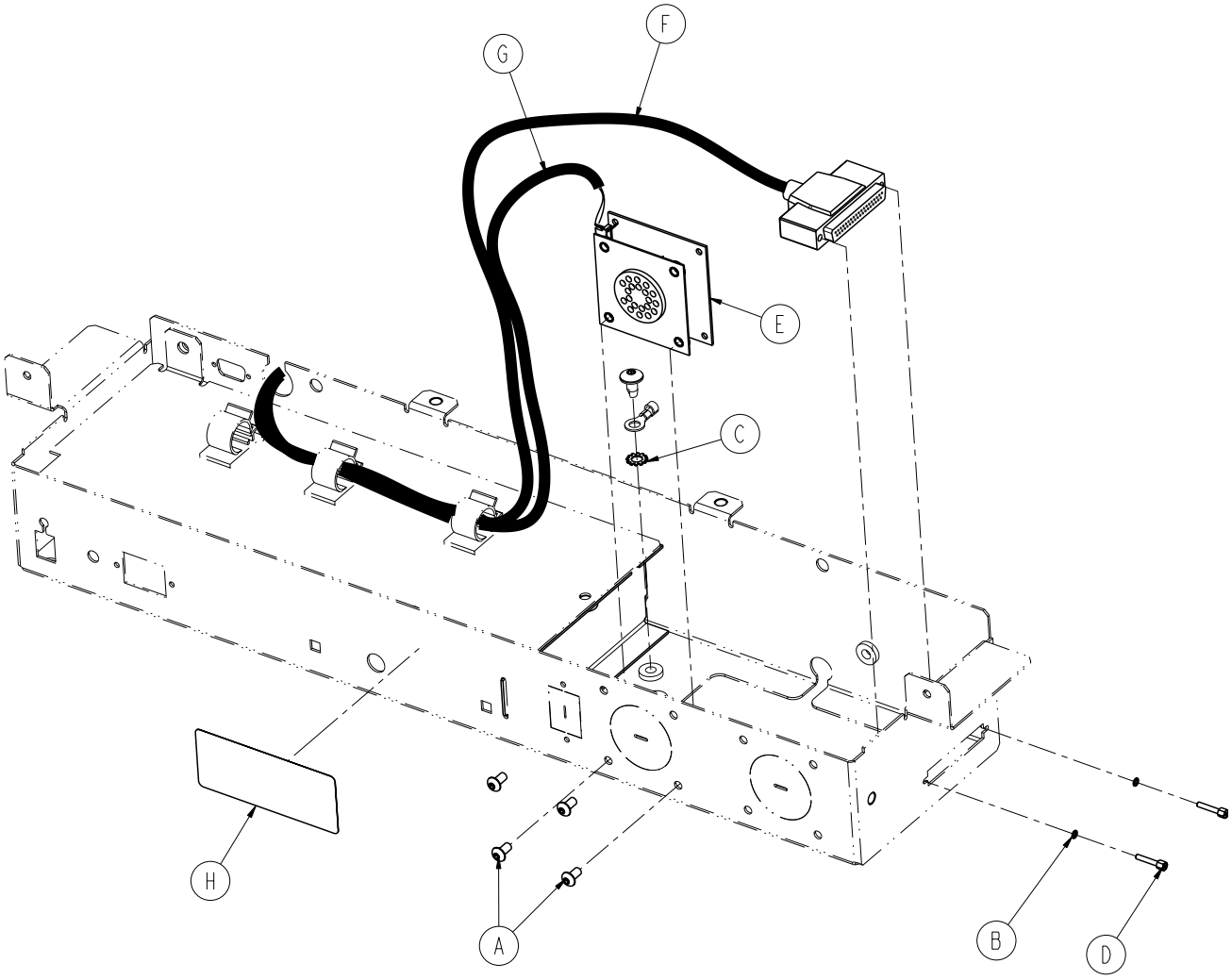

Return To Table of Contents

Optional Battery Backup/Zoom® Litter Assembly, HWI w/Nurse Call & 1 Stryker Port

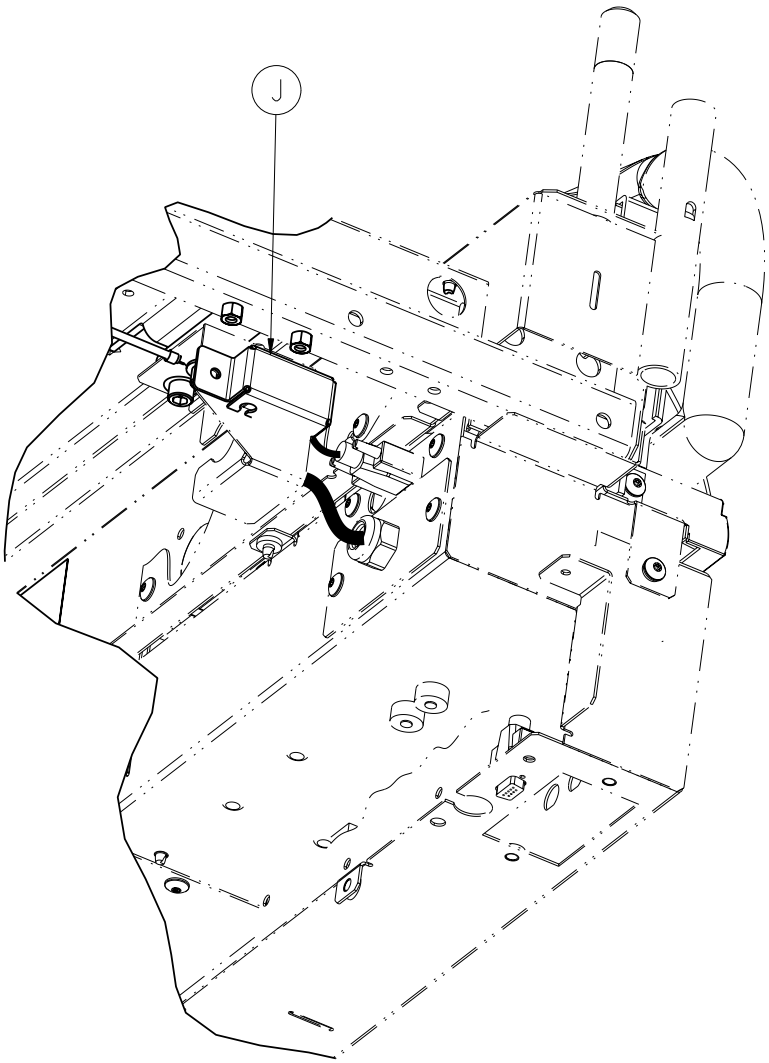

Optional Zoom® Litter Assembly, HWI w/NC & 1 Stryker Port - 3006-031-202 (Reference Only)

Item	Part No.	Part Name	Qty.
A	0004-307-000	Button Head Cap Screw	4
B	0012-046-000	Lock Washer	2
C	0013-010-000	External Lock Washer	1
D	3001-300-007	Screwjack	2
E	3001-314-920	HWI Pendant Port PCB	1
F	3002-080-008	Headwall Interface Cable	1
G	3002-031-809	Zoom® Pendant Port Cable	1
H	3006-090-028	Cord Out Label	1
J	3006-303-045	Battery Enclosure Assembly	1

Return To Table of Contents

Optional Zoom® Litter Assembly, Nurse Call and 1/4” Port

For Reference Only: 3006-031-204

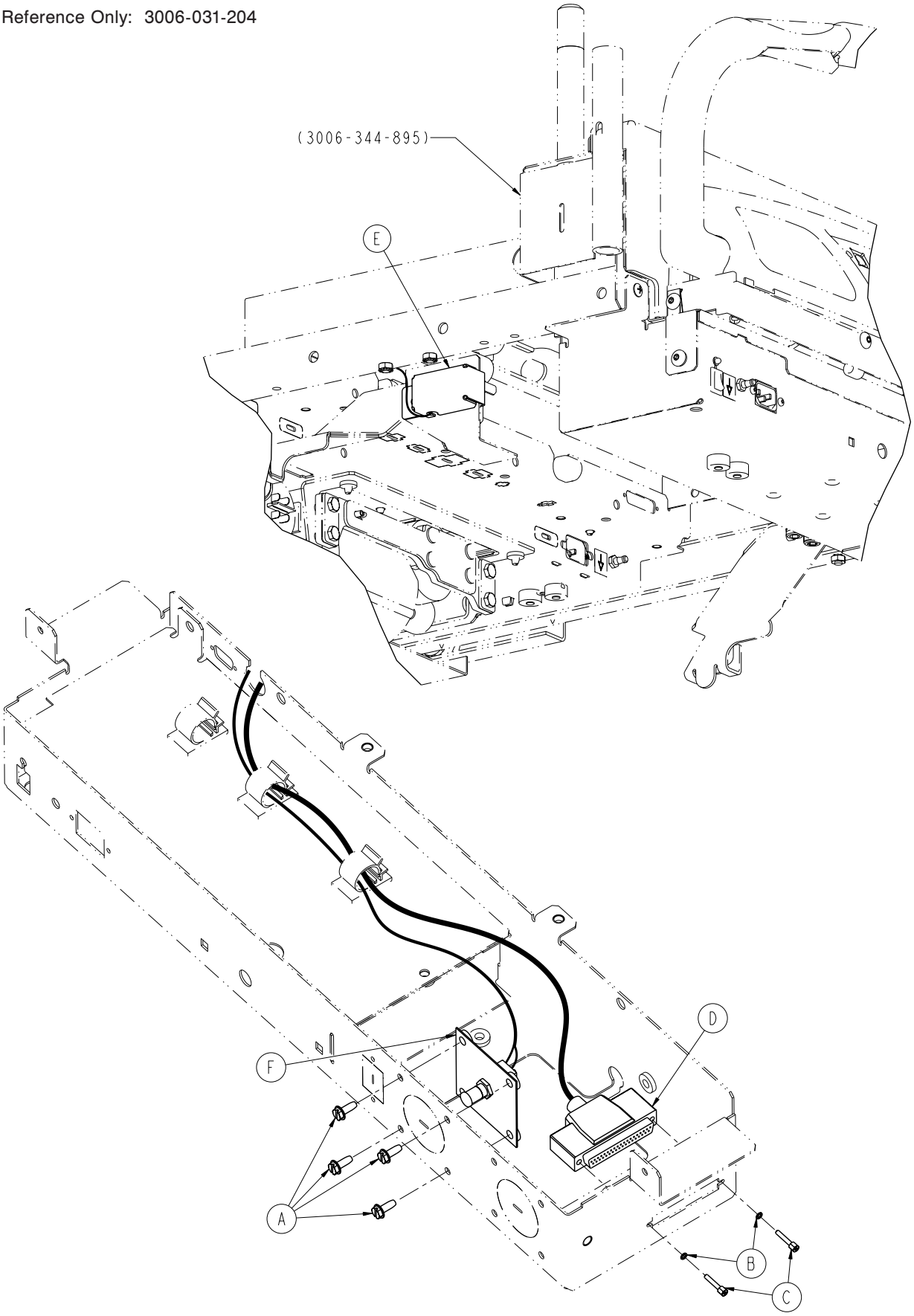

Return To Table of Contents

Optional Zoom® Litter Assembly, Nurse Call and 1/4” Port

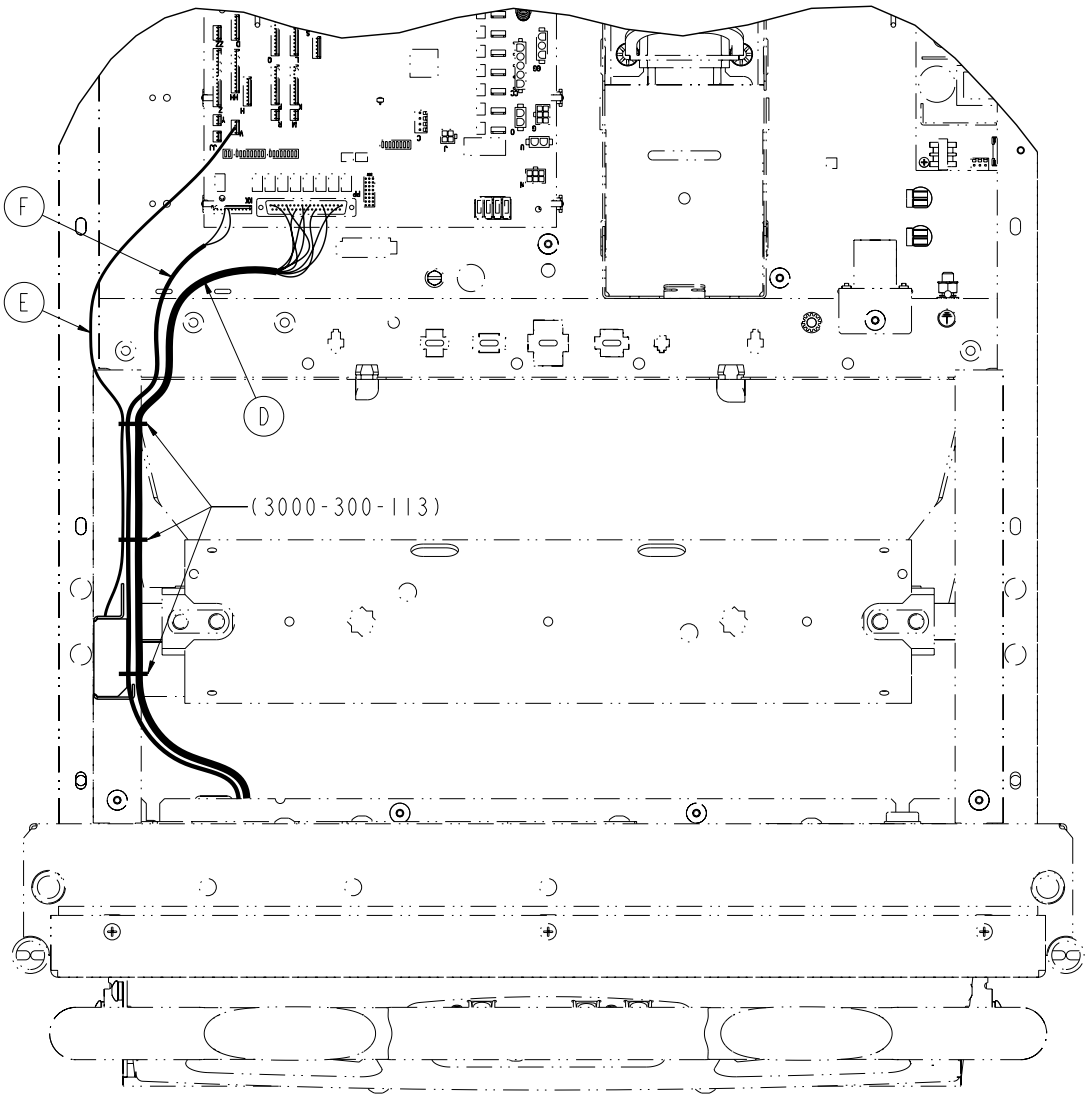

Optional Litter Assembly, Nurse Call and 1/4” Port - 3006-031-204 (Reference Only)

Item	Part No.	Part Name	Qty.
A	0003-224-000	Hex Screw, #10-24 x 1/2”	4
B	0012-046-000	Split Lock Washer	2
C	3001-300-007	Screwjack	2
D	3002-080-008	Headwall (Zoom®) Interface Cable	1
E	3006-303-045	Battery Enclosure Assembly	1
F	3006-383-100	1/4” Headwall Interface Port Ass’y	1

Return To Table of Contents

Optional *i*Bed Enhanced Nurse Call, 37-Pin Plugover Assembly

(Applies to beds with iBed® Awareness option only)

For Reference Only: 3006-303-010 Rev E

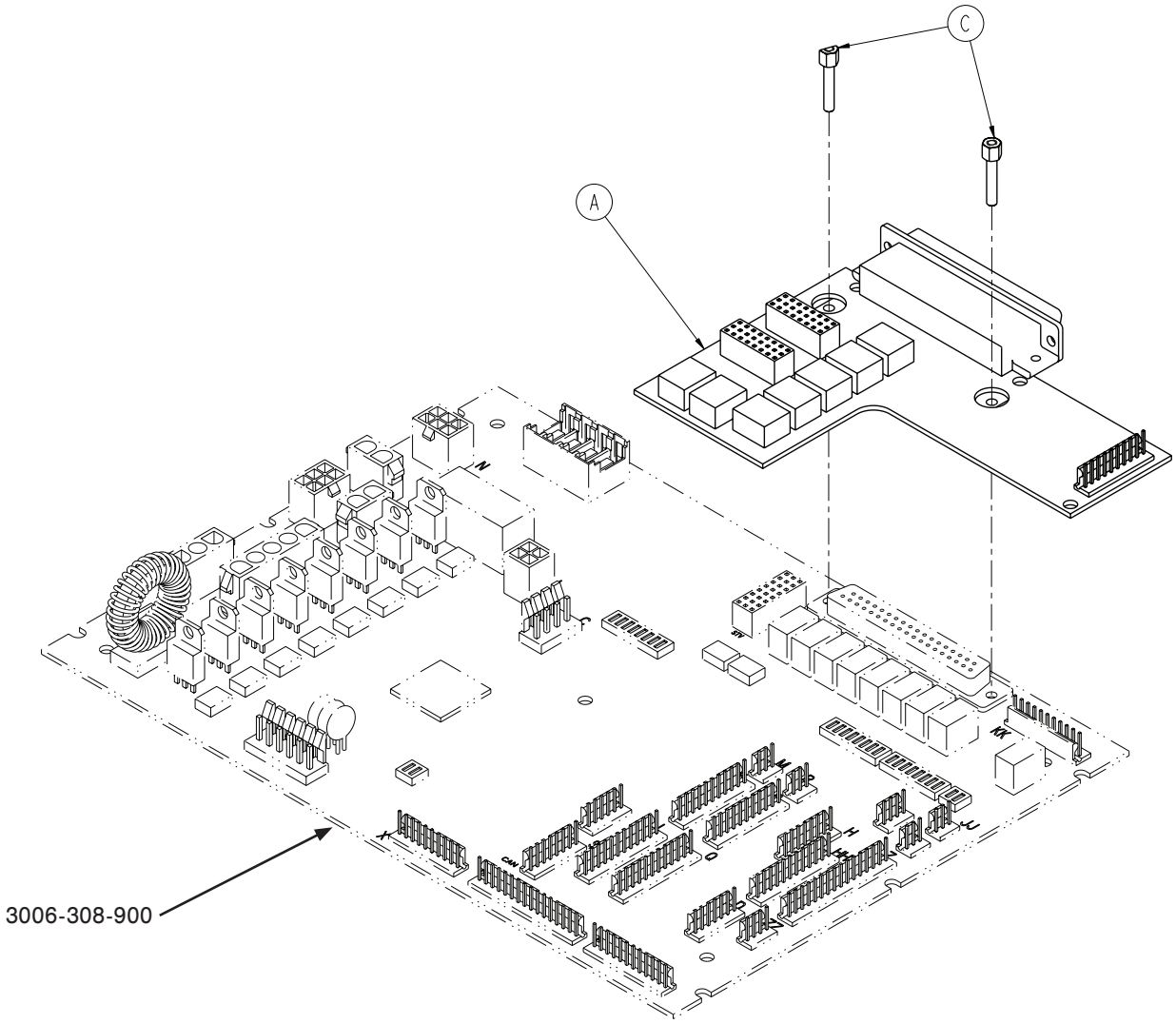

Return To Table of Contents

Optional *i*Bed Enhanced Nurse Call, 37-Pin Plugover Assembly

(Applies to beds with iBed® Awareness option only)

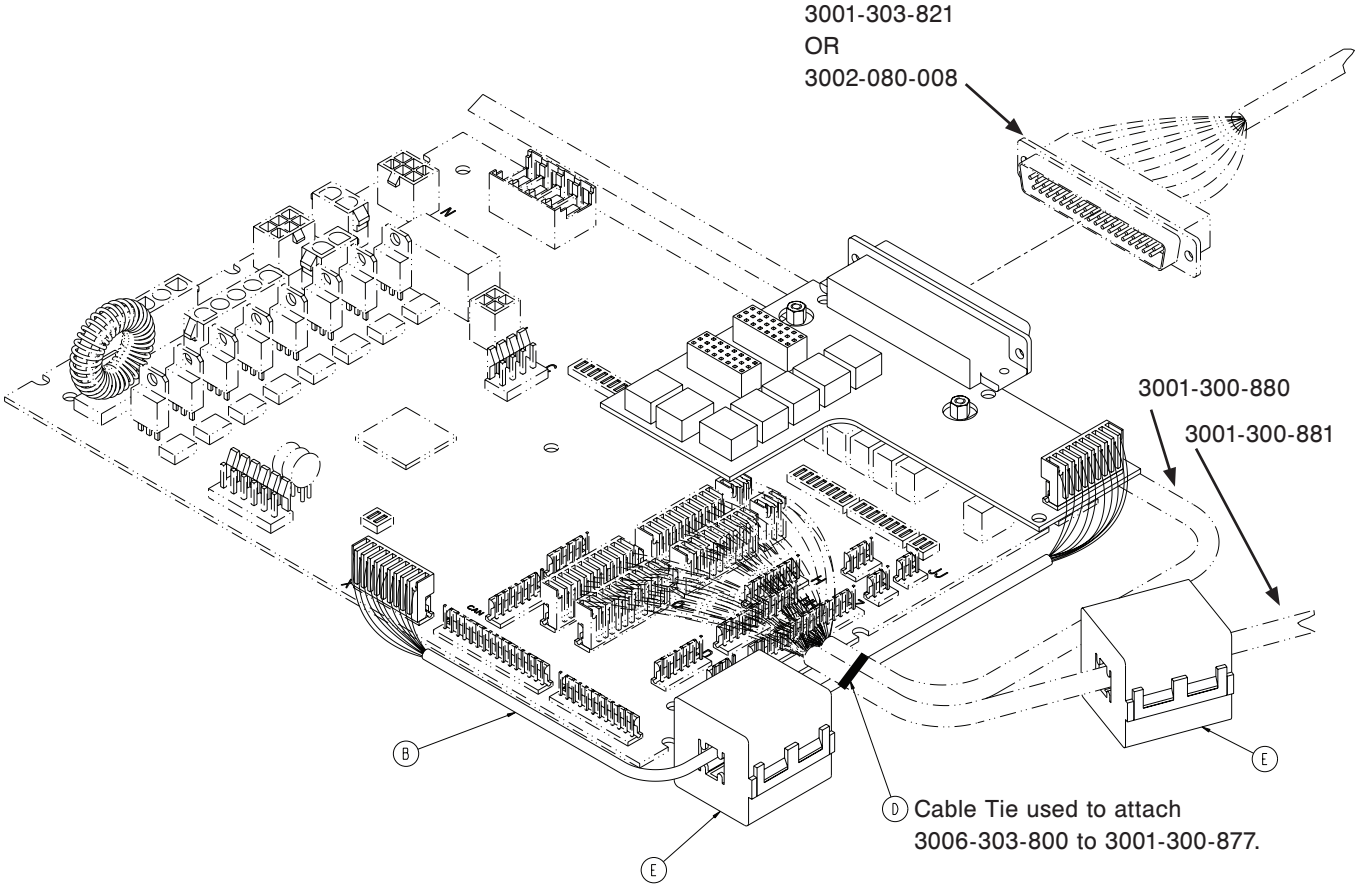

Optional *i*Bed Enhanced Nurse Call, 37-Pin Plugover Board - 3006-303-010 Rev E (Reference Only)

Item	Part No.	Part Name	Qty.
A	3006-303-900	37-Pin Plugover Board	1
B	3006-303-800	*i*Bed® Awareness Plugover Board Cable	1
C	3001-300-007	Screwjack	2
D	3000-300-113	8” Cable Tie	1
E	0059-144-000	Split Ferrite	2

Return To Table of Contents

Battery Enclosure Assembly

For Reference Only: 3006-303-045

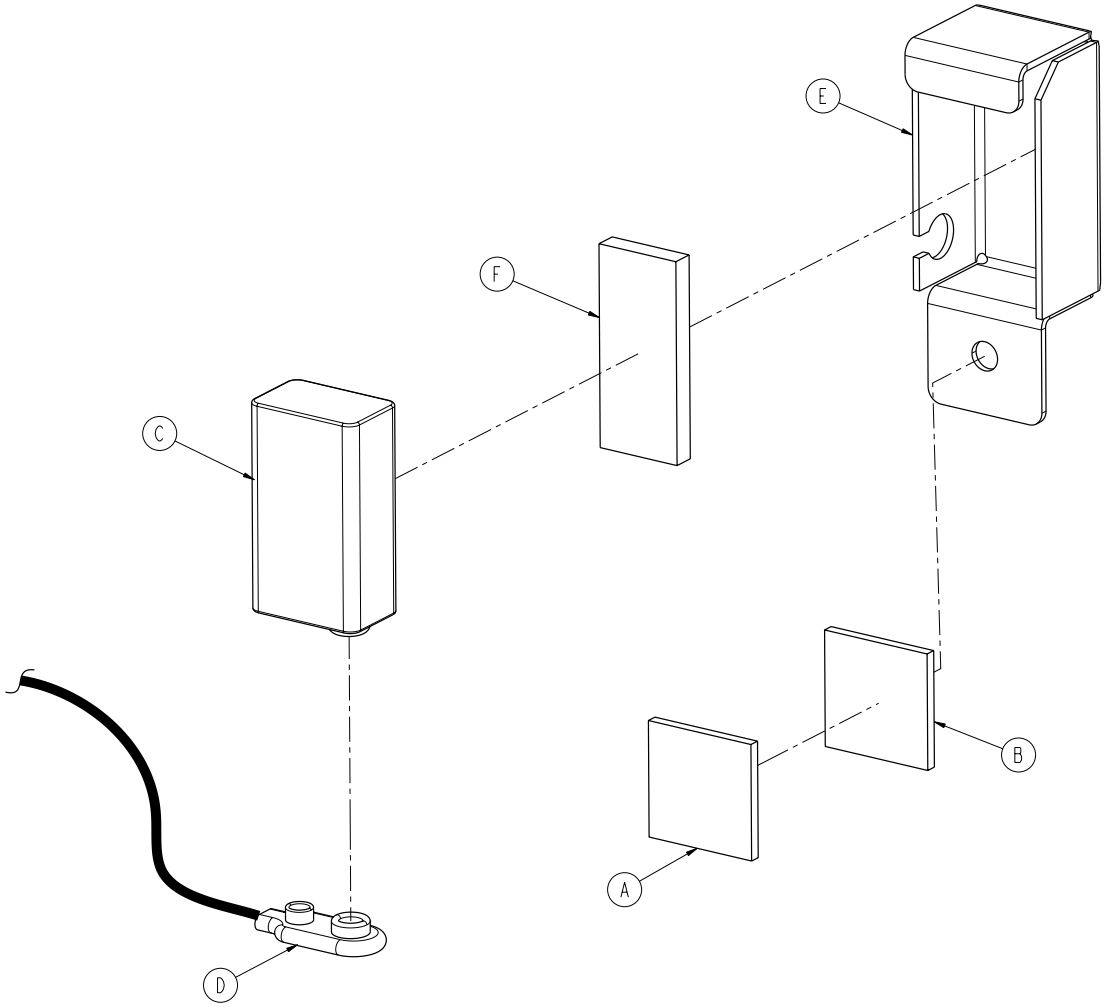

Item	Part No.	Part Name	Qty.
A	0029-008-000	Dual-Lock	1
B	0029-010-000	Dual-Lock	1
C	3000-303-871	Battery - 9V	1
D	3001-303-811	Battery Cable	1
E	3006-304-012	Battery Enclosure	1
F	7900-001-291	Foam Tape (1.75 inches)	1

Return To Table of Contents

Optional Battery Backup Option Head End Enclosure Ass'y

For Reference Only: 3006-450-150

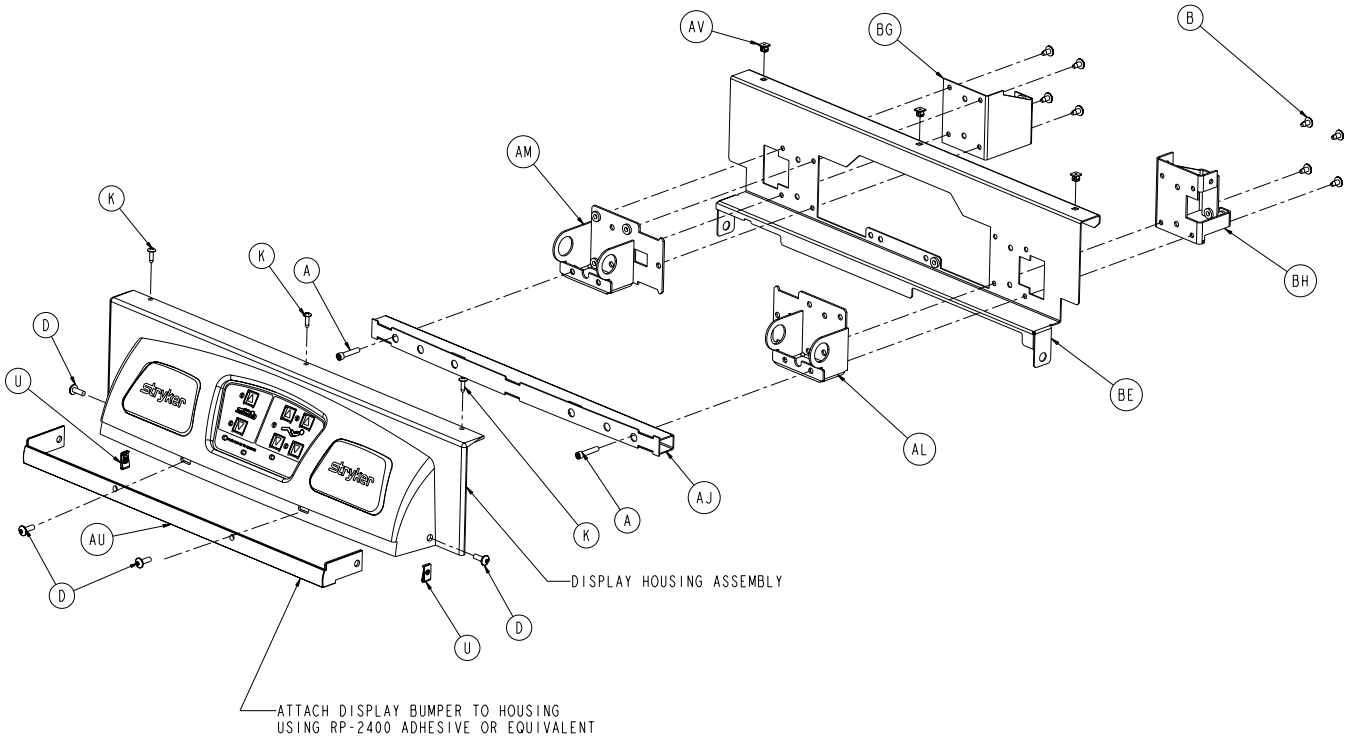

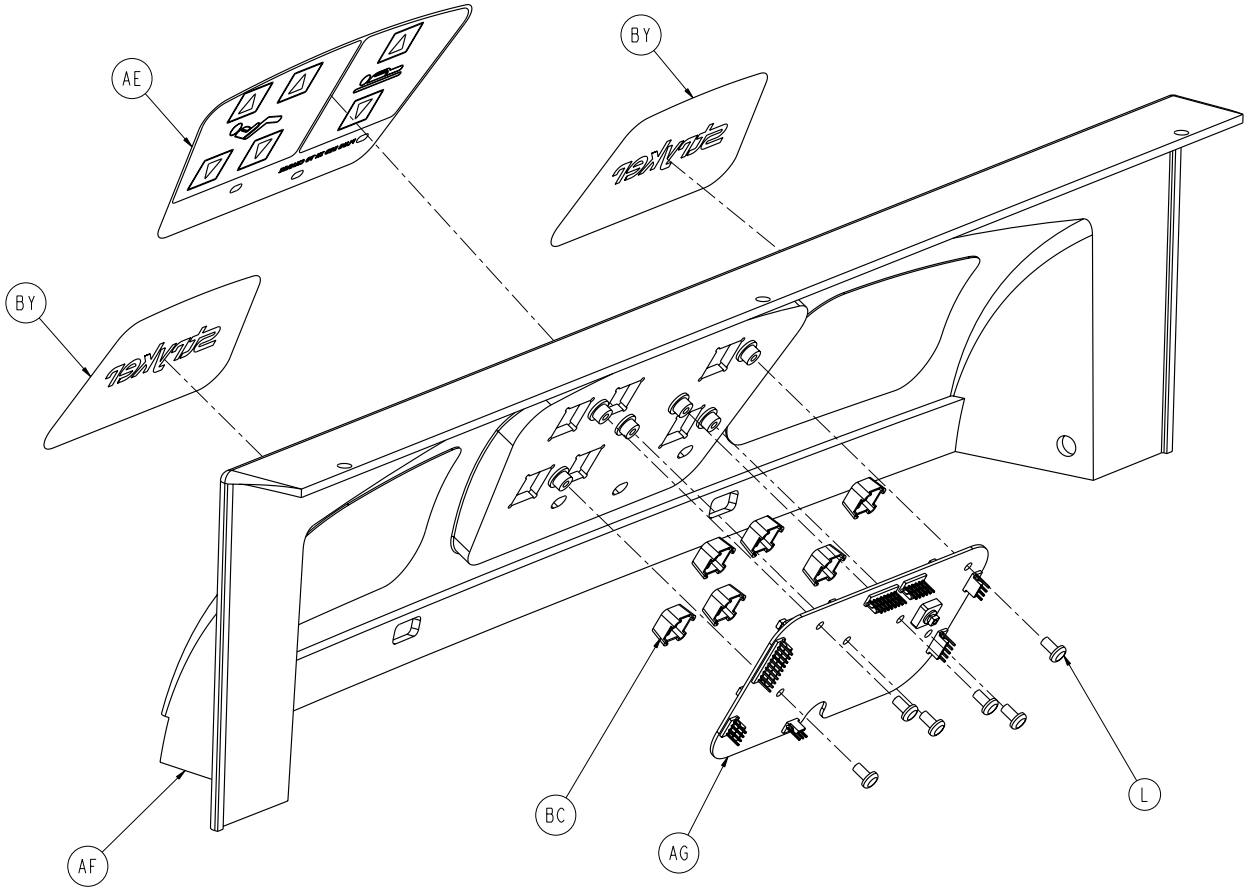

Return To Table of Contents

Optional Battery Backup Option Head End Enclosure Ass'y

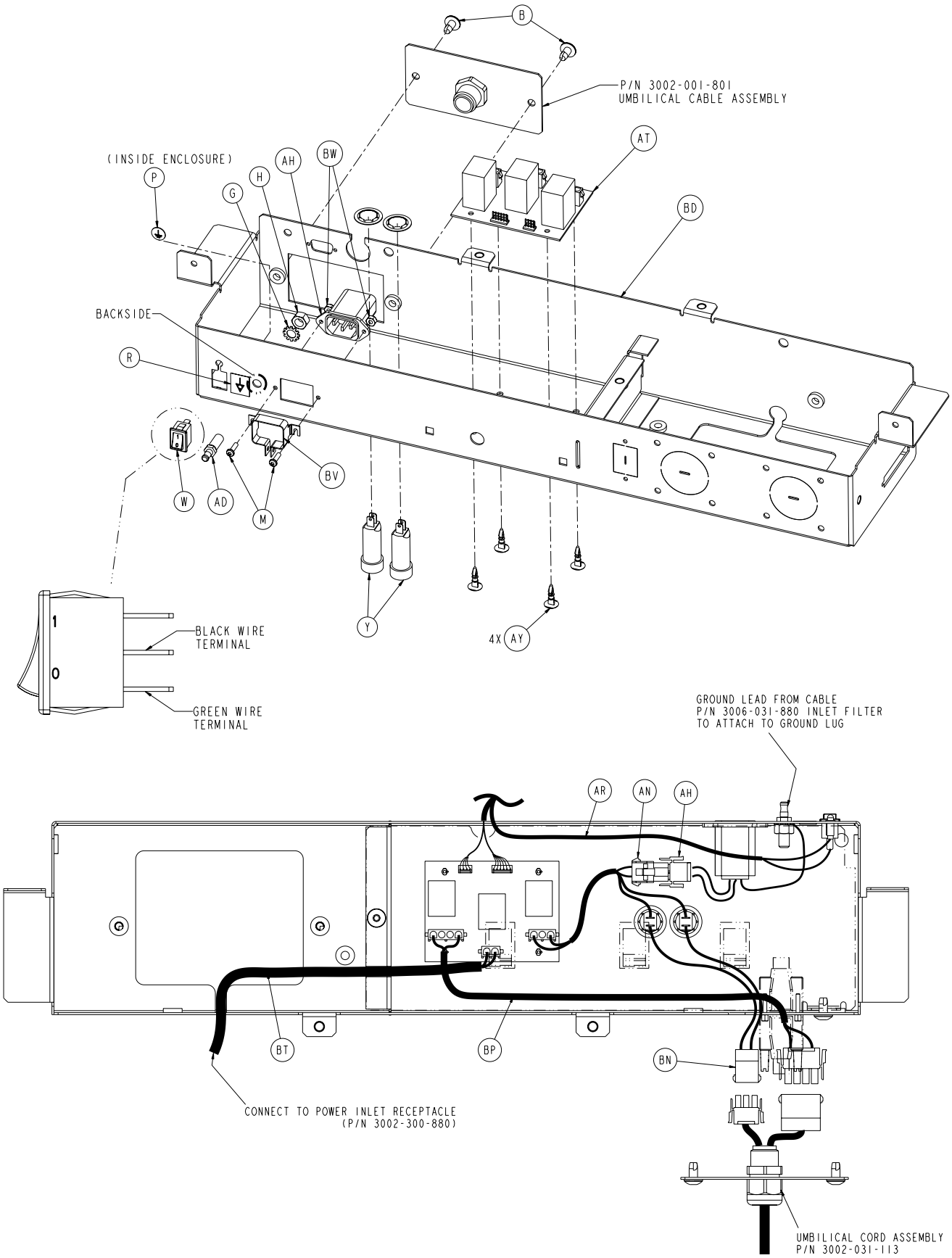

Return To Table of Contents

Optional Battery Backup Option Head End Enclosure Ass'y

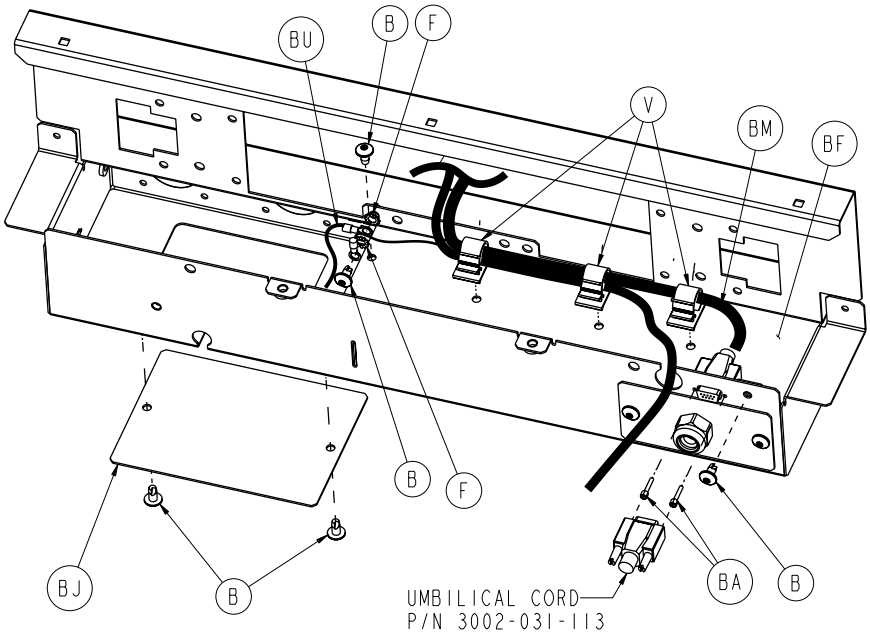

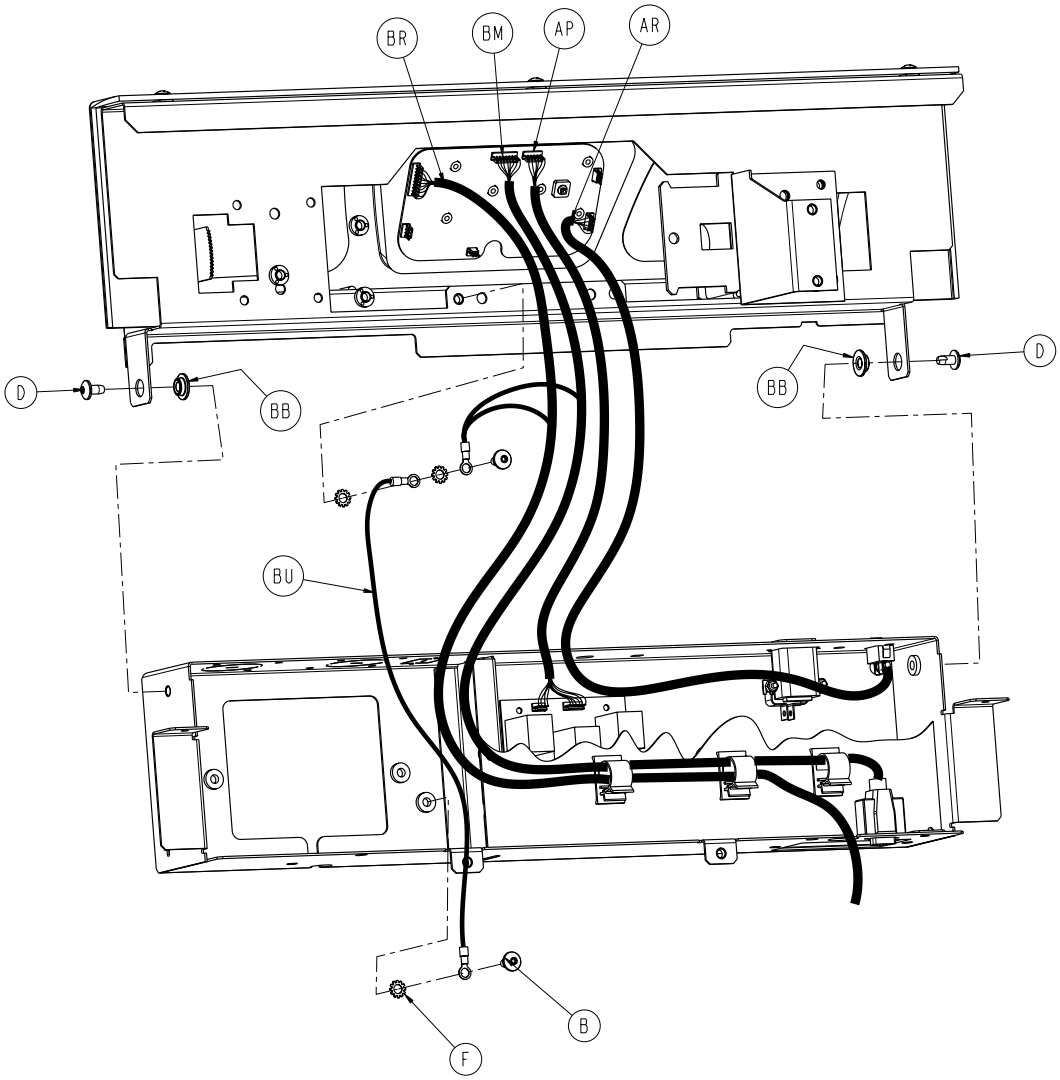

Return To Table of Contents

Optional Battery Backup Option Head End Enclosure Ass'y

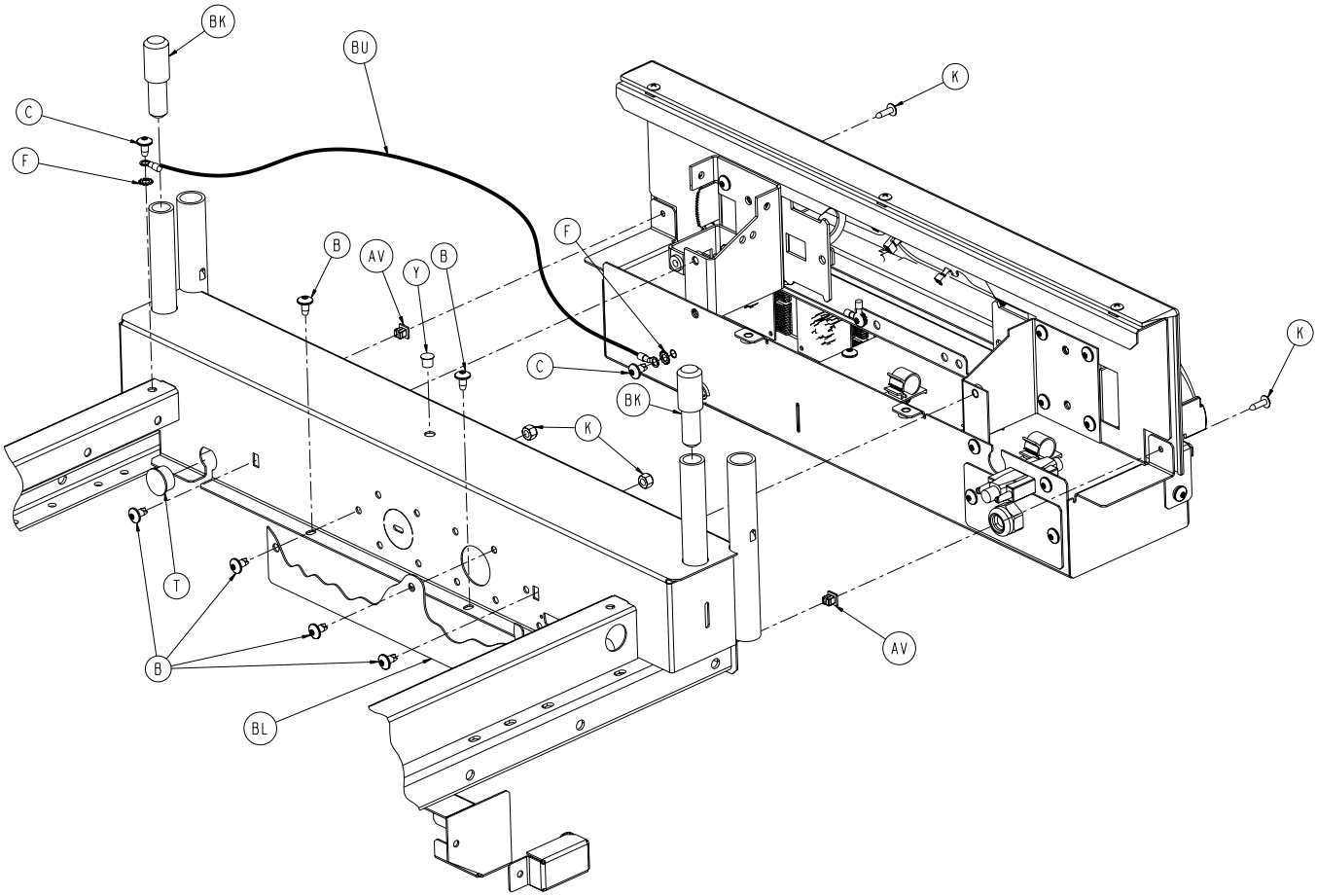

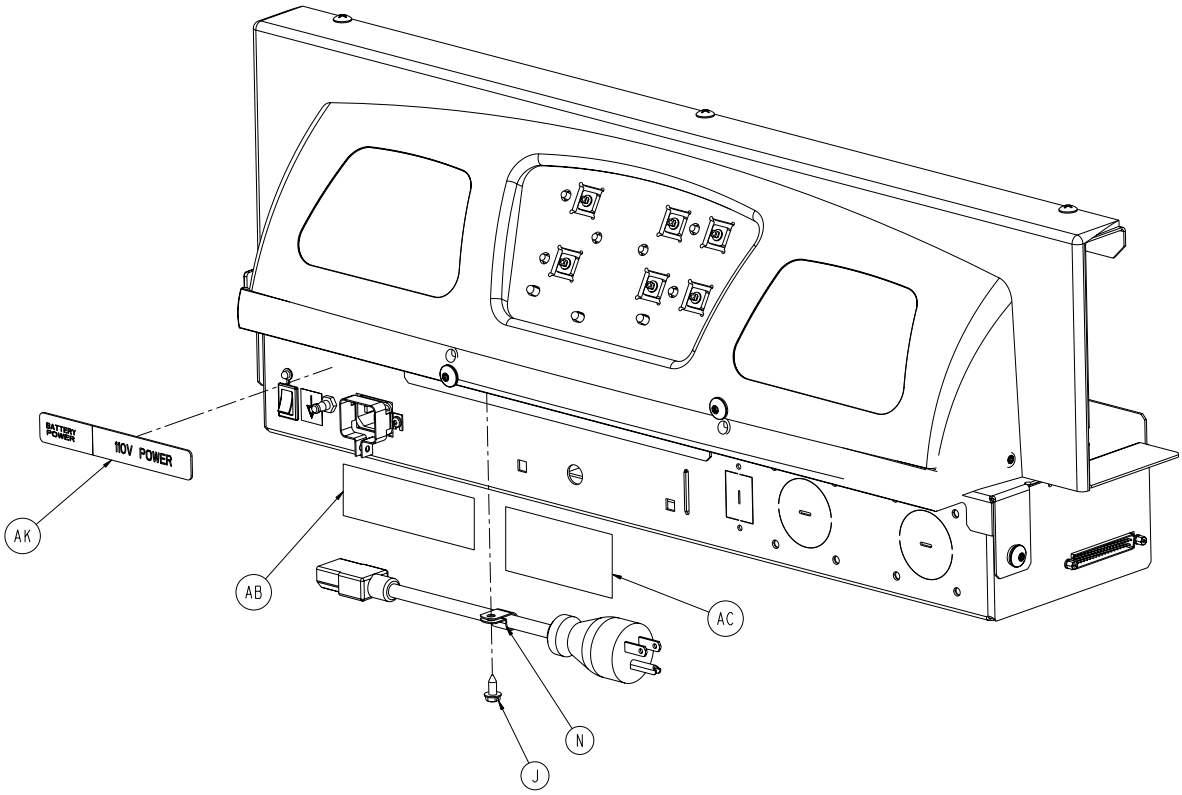

Return To Table of Contents

Optional Battery Backup Option Head End Enclosure Assembly - 3006-450-150 (Reference Only)

Item	Part No.	Part Name	Qty.
A	0004-142-000	Socket Head Cap Screw	2
B	0007-052-000	Truss Head Torx	22
C	0007-053-000	Truss Head Torx	2
D	0007-063-000	Truss Head Torx	6
F	0013-010-000	External Tooth Lockwasher	5
G	0013-038-000	External Spring Lockwasher	1
H	0016-033-000	Kep Nut	1
J	0023-025-000	Hex Washer Head Screw	1
K	0023-080-000	Truss Head Screw	5
L	0023-112-000	high/Low Tapping Screw	6
M	0050-032-000	Pan Head Machine Screw	2
N	0034-022-000	Cord Clamp	1
P	0036-046-000	Ground Label	1
R	0036-115-000	Ground Label	1
T	0037-240-000	Black, Plastic Hole Plug	1
U	0055-027-000	"U"-type Nut	2
V	0059-133-000	Push-Mount Wire Clip	3
W	0059-191-000	On/Off Switch	1
Y	0059-195-000	Circuit Breaker	2
AA	0059-738-000	Heyco Black Dome Plug	1
AB	1550-090-001	Hospital Grade Plug Label	1
AC	2011-001-104	Danger Label	1
AD	2011-001-215	Grounding Lug Tuv	1
AE	3006-031-010	HE Battery Backup Display Label	1
AF	3006-031-208	Top Display Housing Ass'y	1
AG	2030-031-910	CPU Display Assembly	1
AH	3006-031-880	Inlet Filter Cable	1
AJ	3006-031-054	Bumper Attachment Wldmt.	1
AK	3006-031-103	Power Label	1
AL	2040-031-110	Pivot Bracket, RH	1
AM	2040-031-111	Pivot Bracket, LH	1
AN	2040-031-808	AC Charger Jumper Cable	1
AP	2040-0031-809	CPU Cross-Over PCB Jumper Cable	1
AR	2040-031-810	On/Off Cable	1
AT	2040-031-900	AC Switchover PCB Ass'y	1
AU	3006-231-069	Display Bumper	1
AV	3000-300-002	Plastic Clip Nut	5
AW	3000-300-114	4" Wire Tie	5
AY	3000-300-115	Standoff	4
BA	3001-300-007	Jack Screw	2
BB	3001-300-099	Pivot Bearing	2
BC	3001-400-953	Switch Cap	6
BD	3006-032-053	Bottom HE Enclosure Wldmt.	1
BE	3006-032-063	HE Top Enclosure	1
BF	3006-031-092	HE Electronics Cover	1
BG	3006-032-109	HE Reinforcement Brkt, LT	1
BH	3006-032-110	HE Reinforcement Brkt, RT	1
BJ	3006-031-112	Pendant Port Cover	1
BK	3002-031-114	Headboard Extender	2
BL	3006-032-115	Cover Plate	1
BM	3002-031-801	Zoom® CPU Signal Jumper	1
BN	3002-031-802	Zoom® Breaker Jumper	1
BP	3002-031-803	Zoom® Cross-Over PCB Jumper	1
BR	3002-004-805	Zoom®-to-Bed CPU Jumper	1
BT	3002-031-805	Bed AC Power Jumper	1
BU	3002-300-870	8" Ground Strap	2
BV	0059-205-000	Connector Lock	1
BW	0016-023-000	Nylock Hex Nut	2
BY	3006-350-151	Logo Label	2

Return To Table of Contents

Optional Battery Backup, Head End Enclosure Assembly, *i*Bed® Wireless Option

For Reference Only: 5212-450-150

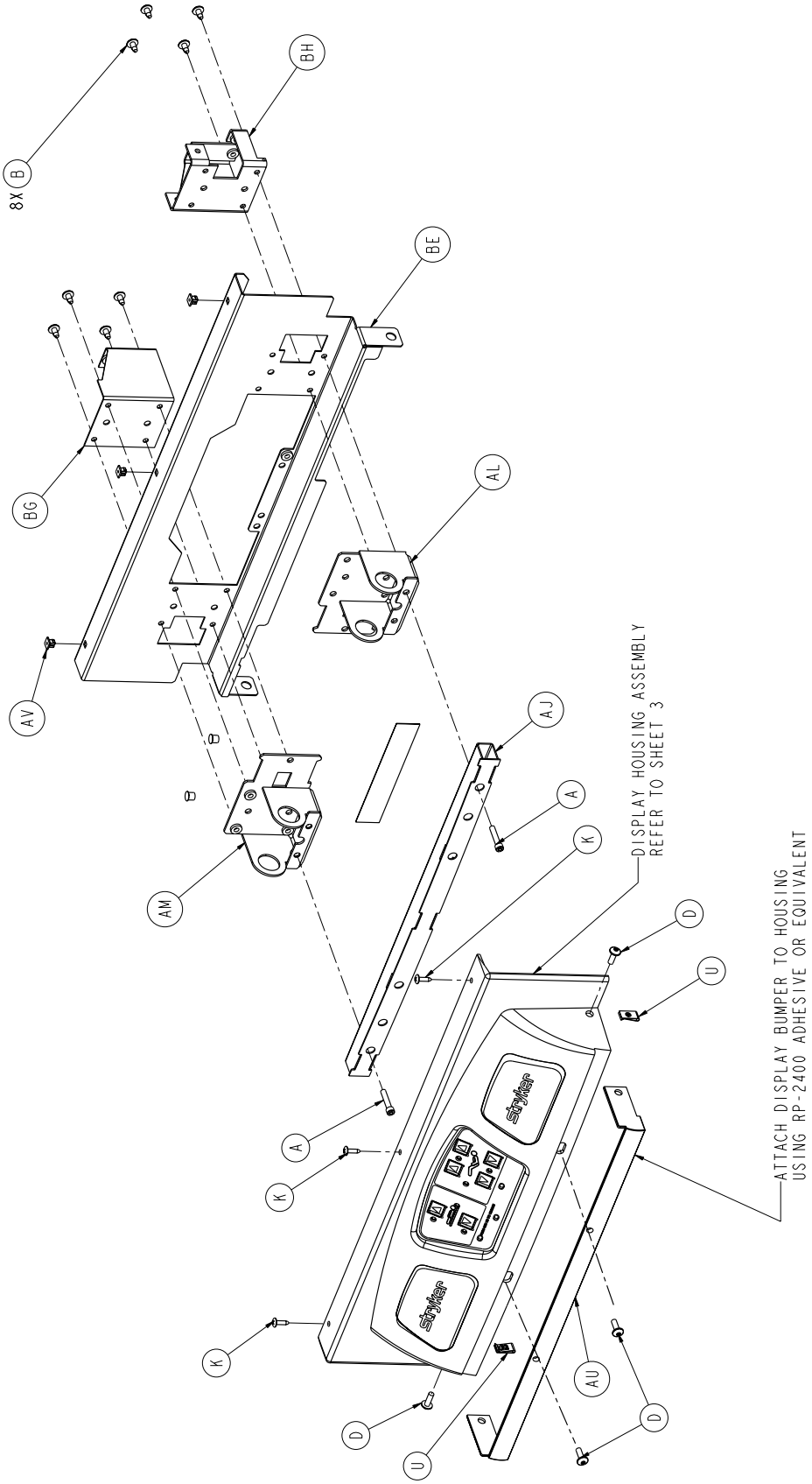

Return To Table of Contents

Optional Battery Backup, Head End Enclosure Assembly, *i*Bed® Wireless Option

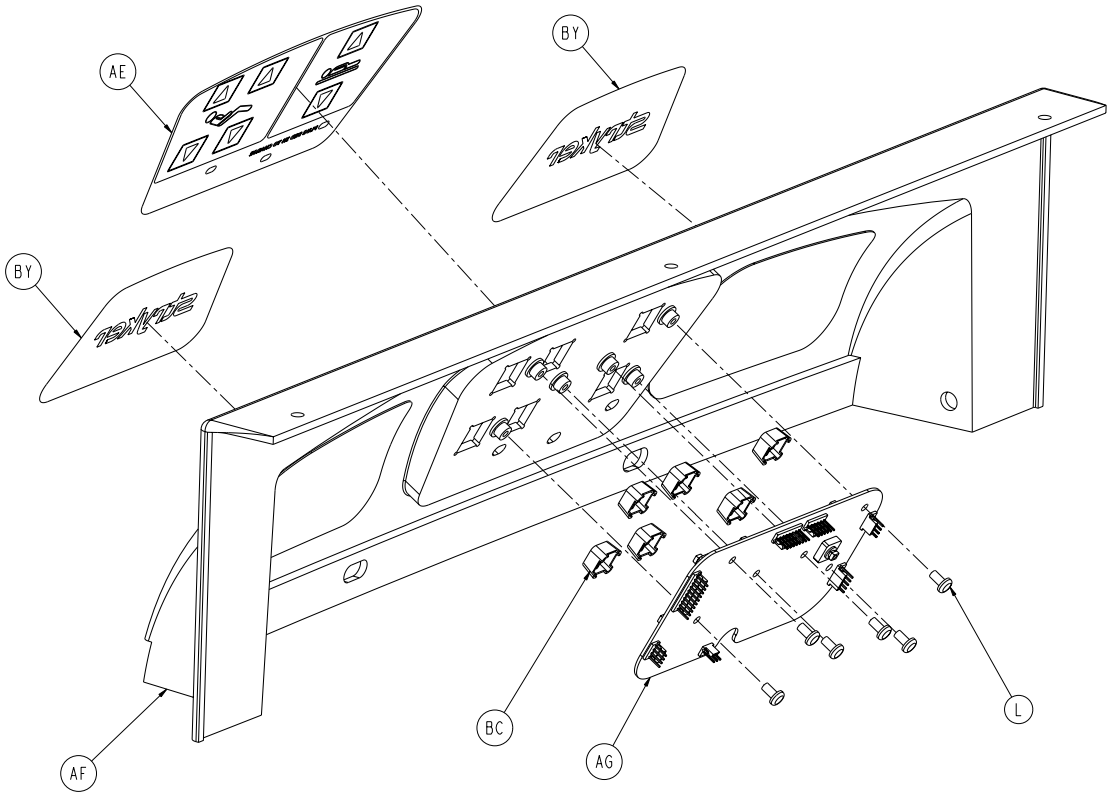

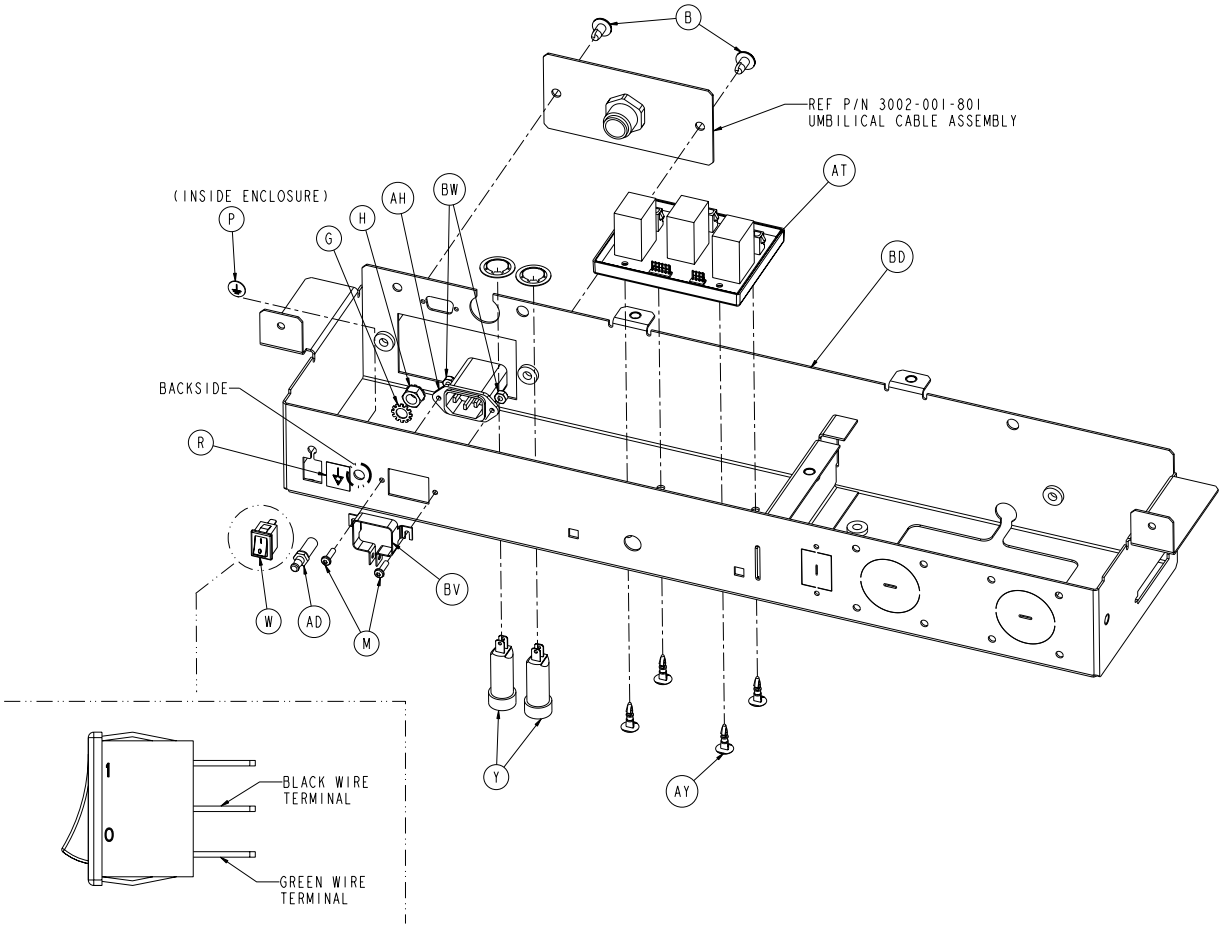

Return To Table of Contents

Optional Battery Backup, Head End Enclosure Assembly, *i*Bed® Wireless Option

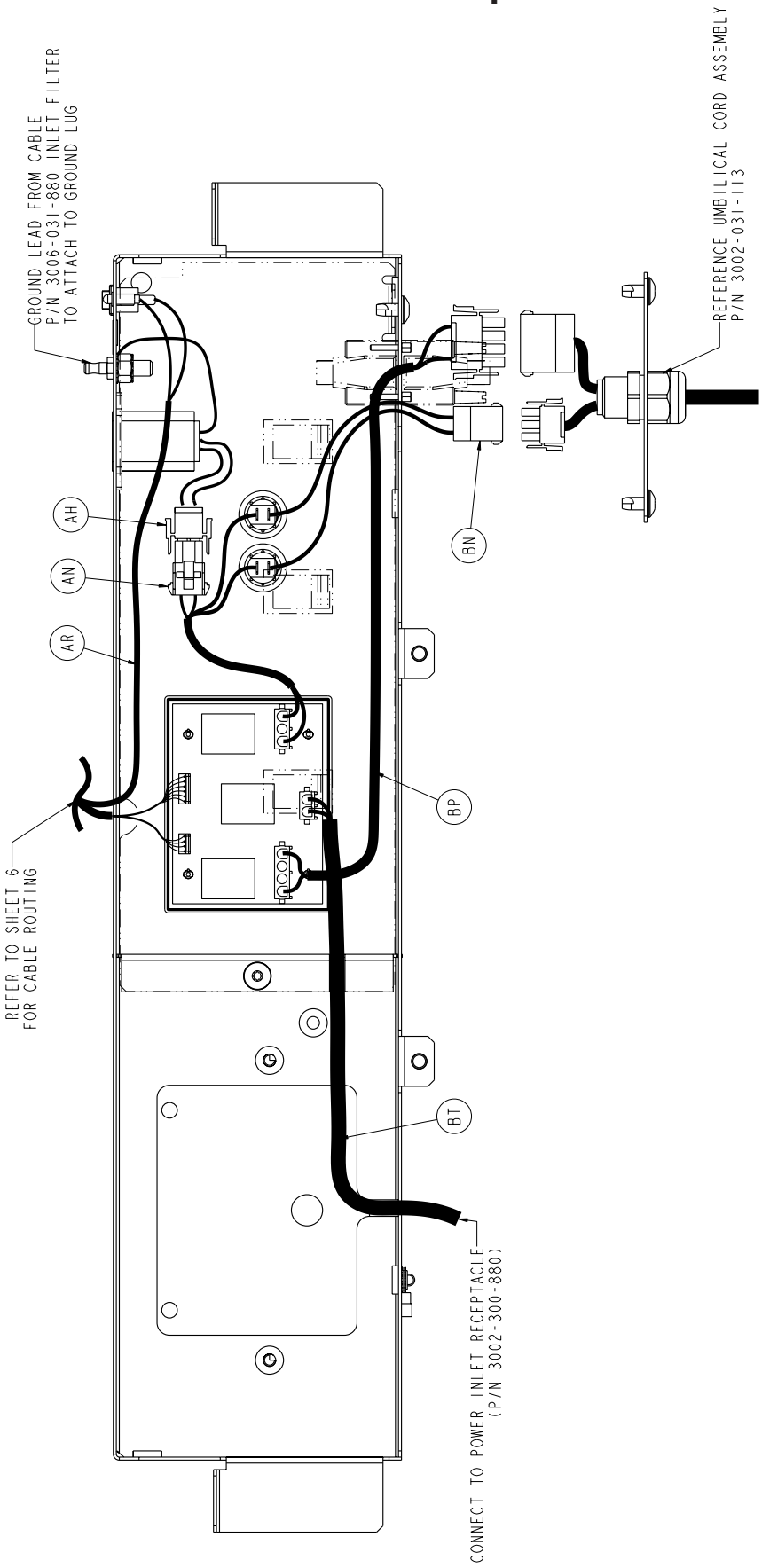

Return To Table of Contents

Optional Battery Backup, Head End Enclosure Assembly, *i*Bed® Wireless Option

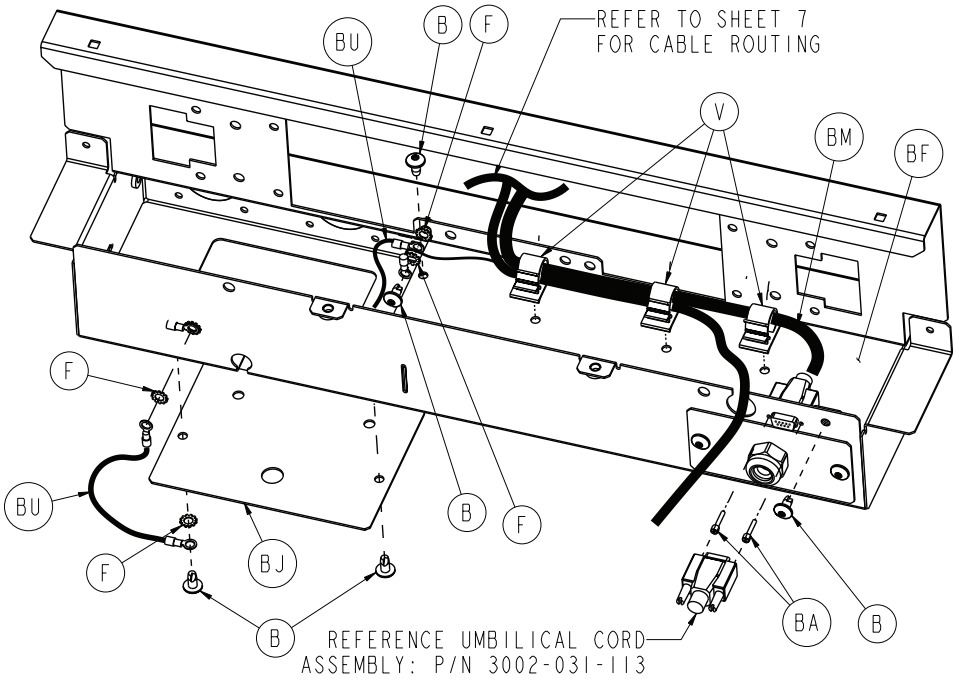

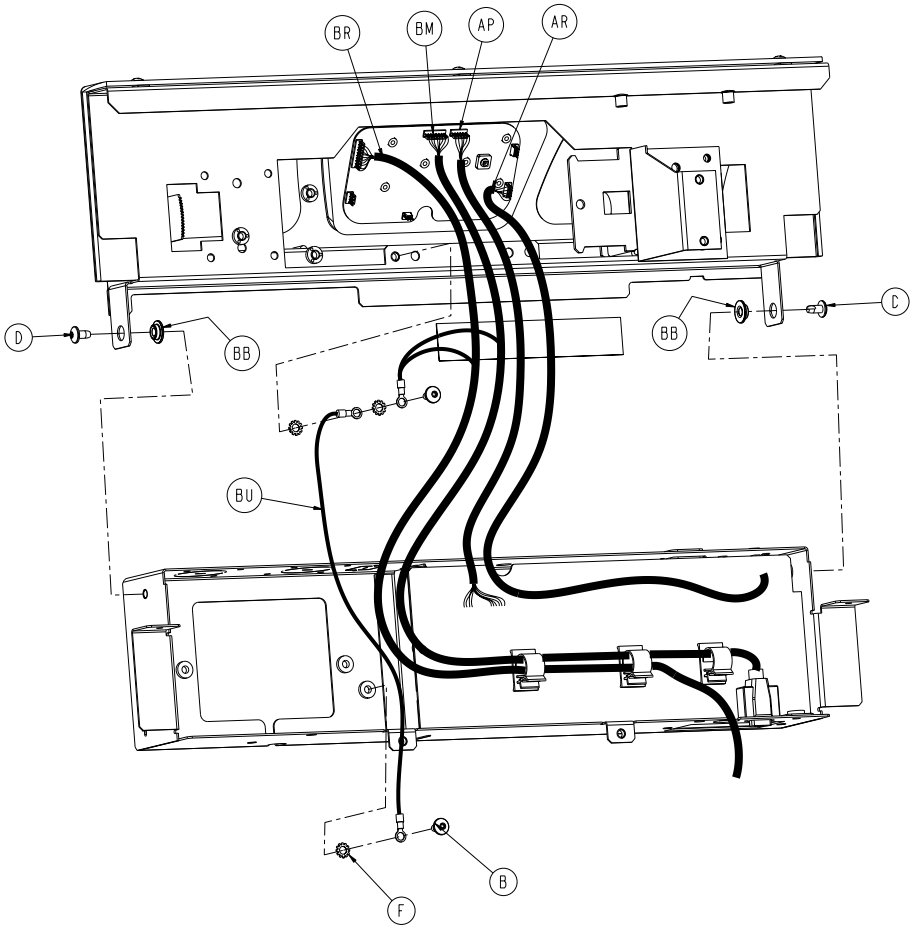

Return To Table of Contents

Optional Battery Backup, Head End Enclosure Assembly, *i*Bed® Wireless Option

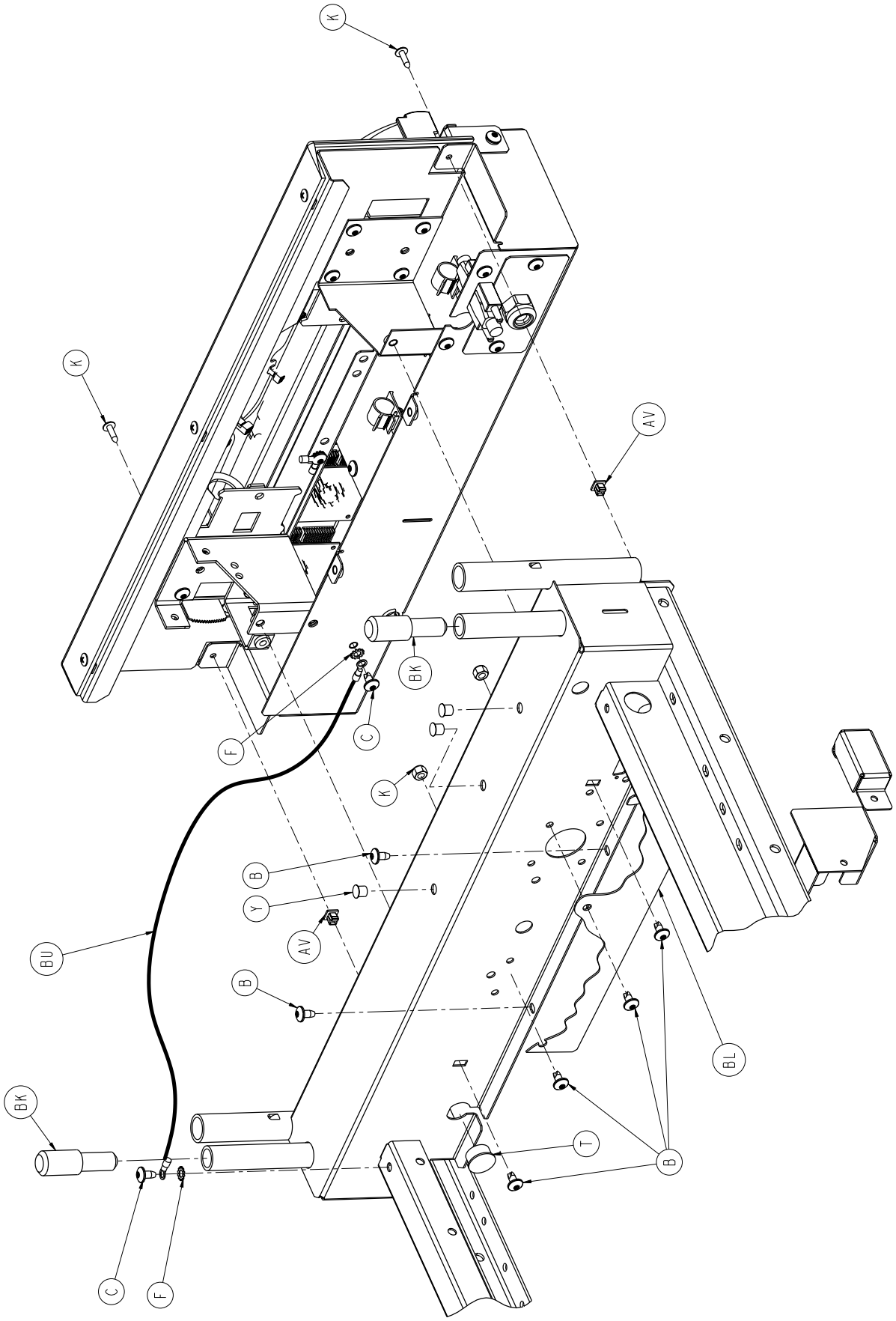

Return To Table of Contents

Optional Battery Backup, Head End Enclosure Assembly, *i*Bed® Wireless Option

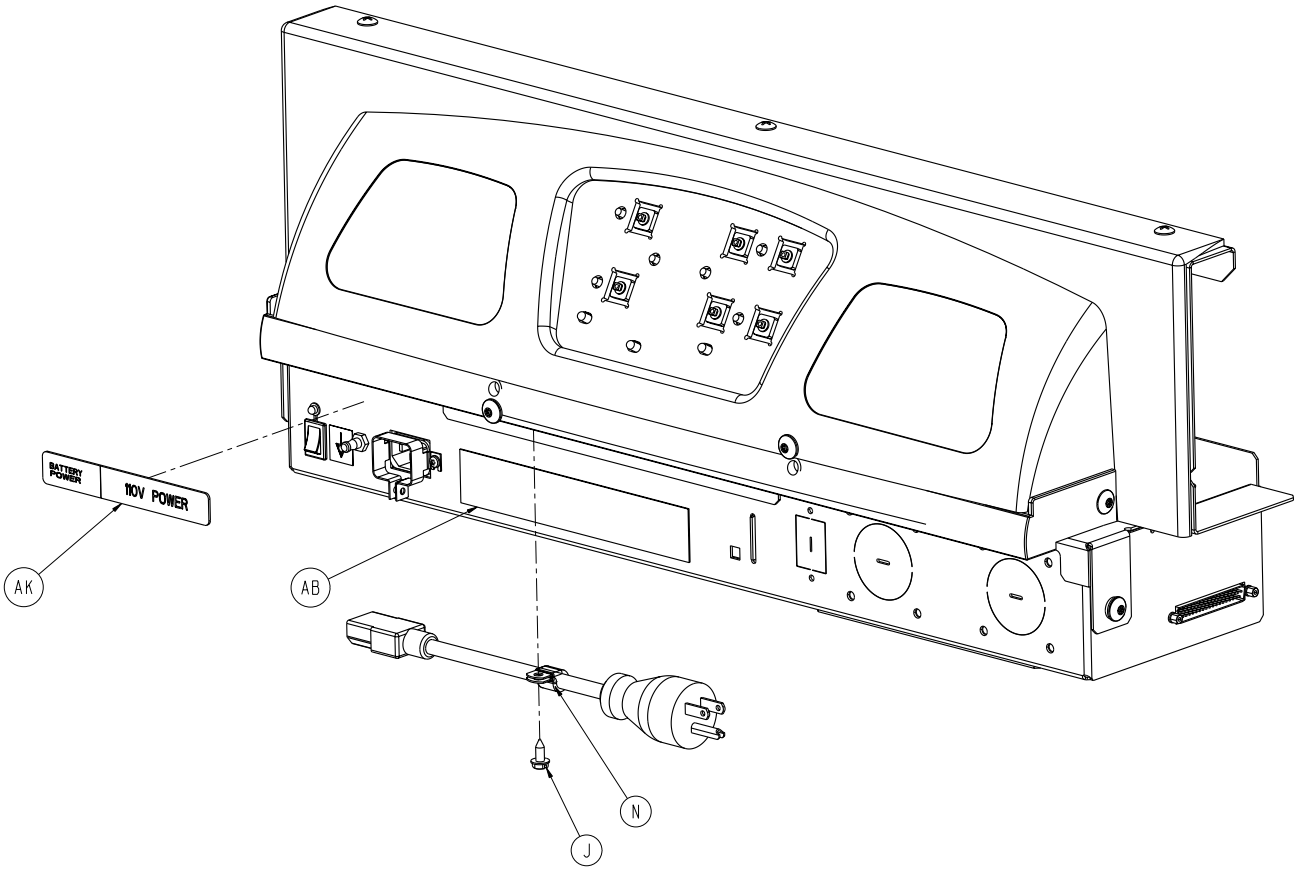

Return To Table of Contents

Optional Battery Backup, Head End Enclosure Assembly, *i*Bed® Wireless Option

Optional Battery Backup, Head End Enclosure Assembly, *i*Bed® Wireless Option - 5212-450-150 (Reference Only)

Item	Part No.	Part Name	Qty.
A	0004-142-000	Socket Head Cap Screw	2
B	0007-052-000	Truss Head Torx	22
C	0007-053-000	Truss Hd Torx	2
D	0007-063-000	Truss Head Torx	6
F	0013-010-000	1/4” External Tooth Lockwasher	7
G	0013-038-000	Lock Washer Ext. Spring	1
H	0016-033-000	Kep Nut	1
J	0023-025-000	Hex Washer Head Screw	1
K	0023-080-000	Truss Head Screw	5
L	0023-112-000	Hi-Low Tapping Screw	6
M	0050-032-000	Pan Head Machine Screw	2
N	0034-022-000	Cord Clamp	1
P	0036-046-000	Label, Ground	1
R	0036-115-000	Label, Ground	1
T	0037-240-000	Hole Plug	1
U	0055-027-000	“U” Type Nut	2
V	0059-133-000	Push-Mount Wire Clip	3
W	0059-191-000	On/Off Switch	1
Y	0059-195-000	Circuit Breaker	2
AA	0059-738-000	Heyco Hole Plug	1
AB	5212-100-807	Label, Caution	1
AD	2011-001-215	Grounding Lug Tuv	1
AE	3006-031-010	Label, Dispaly, Battery Backup, Head End	1
AF	3006-031-208	Top Display Housing Assy	1
AG	2030-031-910	CPU Display Assembly	1
AH	3006-031-880	Inlet Filter Cable	1
AJ	3006-031-054	Bumper Attachment Weldment	1
AK	3006-031-103	Label, Power	1
AL	2040-031-110	Pivot Bracket, Right	1
AM	2040-031-111	Pivot Bracket, Left	1
AN	2040-031-808	Charger AC Jumper Cable	1
AP	2040-031-809	Cross-Over PCB Jumper CPU Cable	1
AR	2040-031-810	On/Off Cable	1
AT	2040-031-900	AC Switchover PCB Assy	1
AU	3006-231-069	Display Bumper	1
AV	3000-300-002	Plastic Clip Nut	5
AW	3000-300-114	4” Wire Tie	5
AY	3000-300-115	Standoff	4
BA	3001-300-007	M/F Screw	2
BB	3001-300-099	Pivot Bearing	2
BC	3001-400-953	Switch Cap	6
BD	3006-141-053	Bottom Enclosure Weldment, Head End	1
BE	3006-032-063	Top Enclosure, Head End	1
BF	3006-031-092	Cover, Head End Enclosure, White	1
BG	3006-032-109	Reinforcement Bracket, Head End Left	1
BH	3006-032-110	Reinforcement Bracket, Head End Right	1
BJ	3006-031-113	Pendant Port Cover	1
BK	3002-031-114	Headboard Extender	2
BL	3006-032-115	Plate Cover	1
BM	3002-031-801	Zoom® CPU Signal Jumper	1
BN	3002-031-802	Zoom® Breaker Jumper	1
BP	3002-031-803	Zoom® Cross-Over PCB Jumper	1
BR	3002-007-805	Zoom® To Bed CPU Jumper	1
BT	3002-031-805	Bed AC Power Jumper	1
BU	3002-300-870	8” Ground Strap	3
BV	0059-205-000	Connector Lock	1
BW	0016-023-000	Nylock Hex Nut	2
BY	3006-350-151	Label, Logo	2

Return To Table of Contents

Optional Zoom® Head End Enclosure Assembly

For Reference Only: 3006-131-010

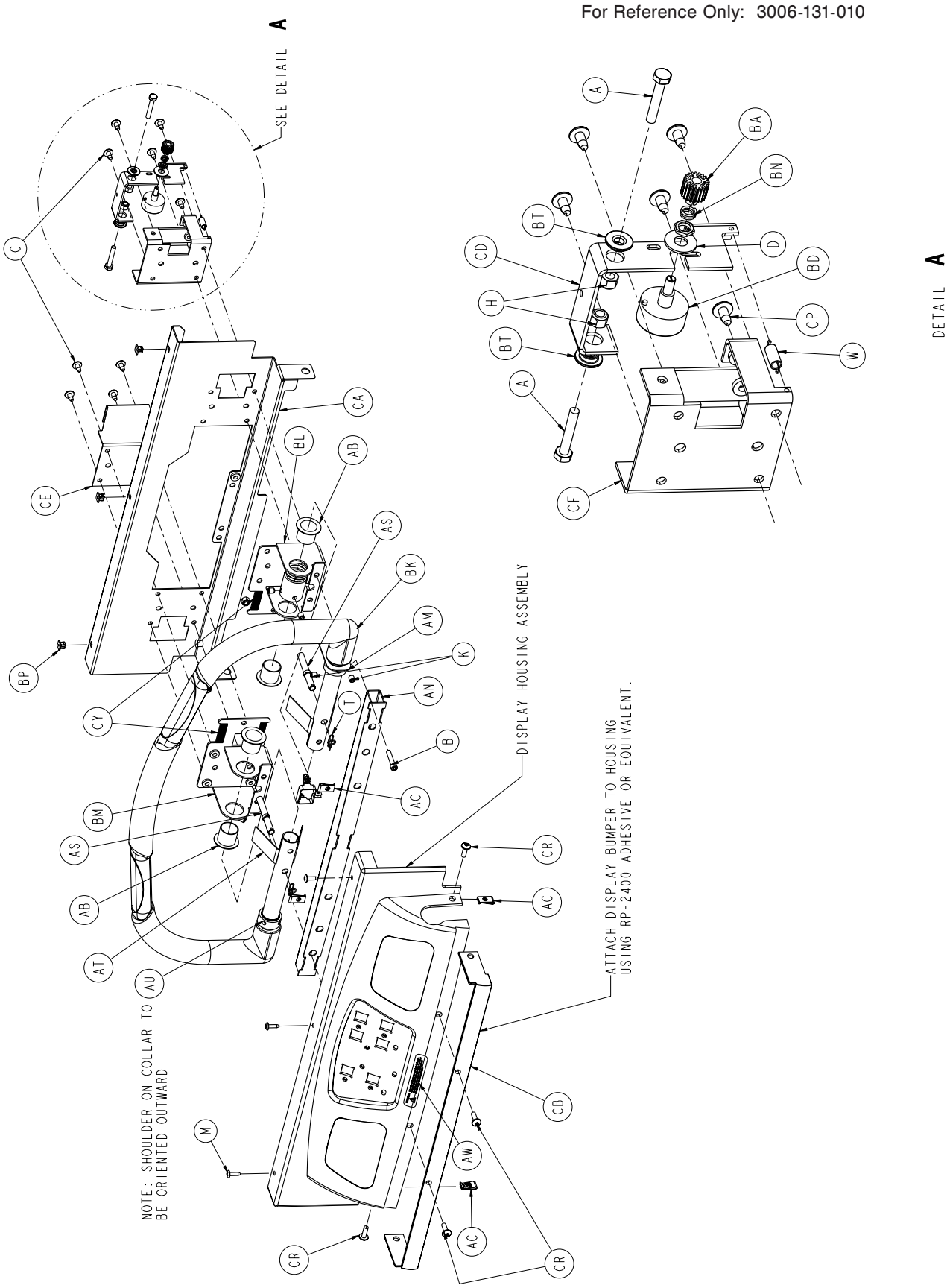

Return To Table of Contents

Optional Zoom® Head End Enclosure Assembly

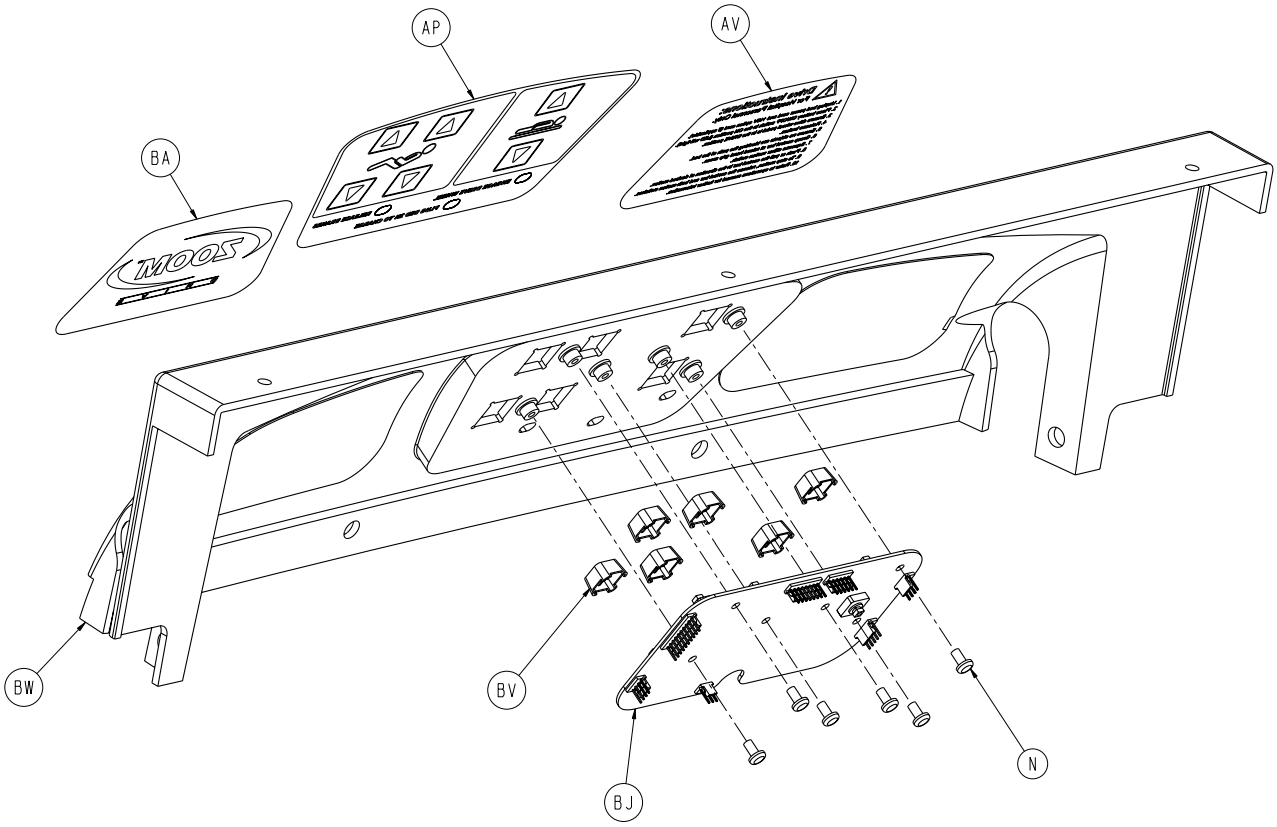

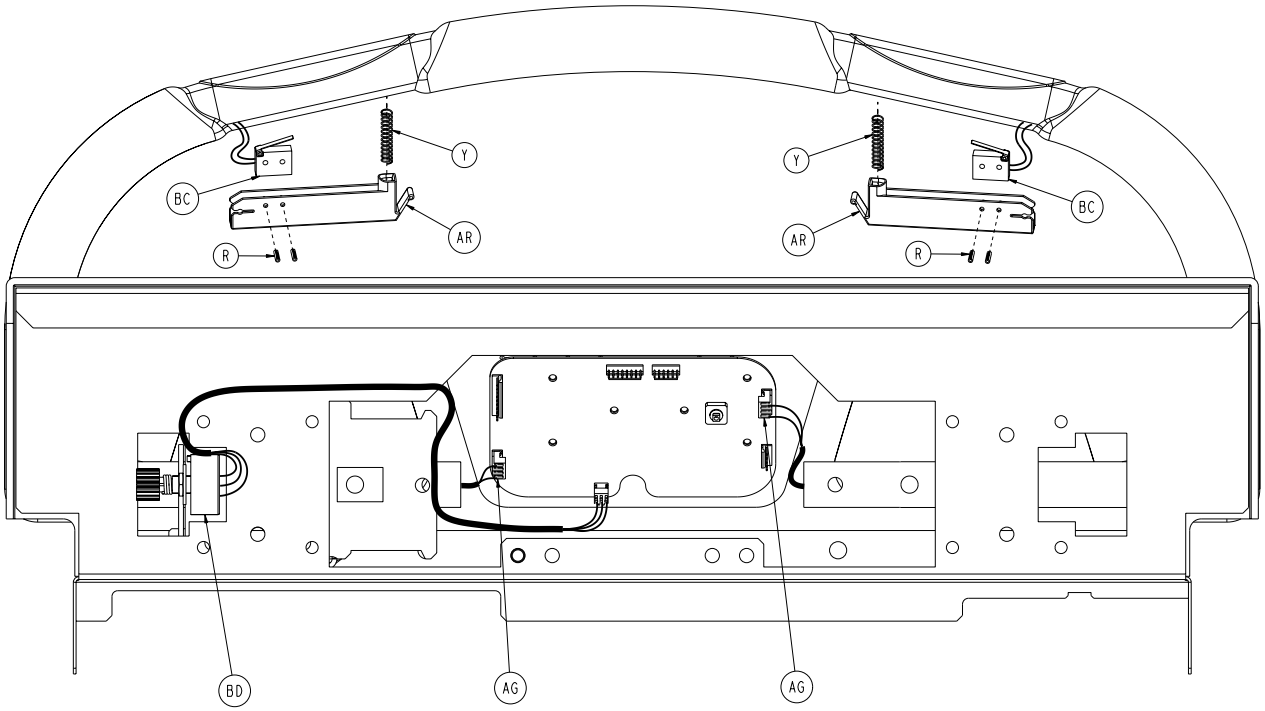

Return To Table of Contents

Optional Zoom® Head End Enclosure Assembly

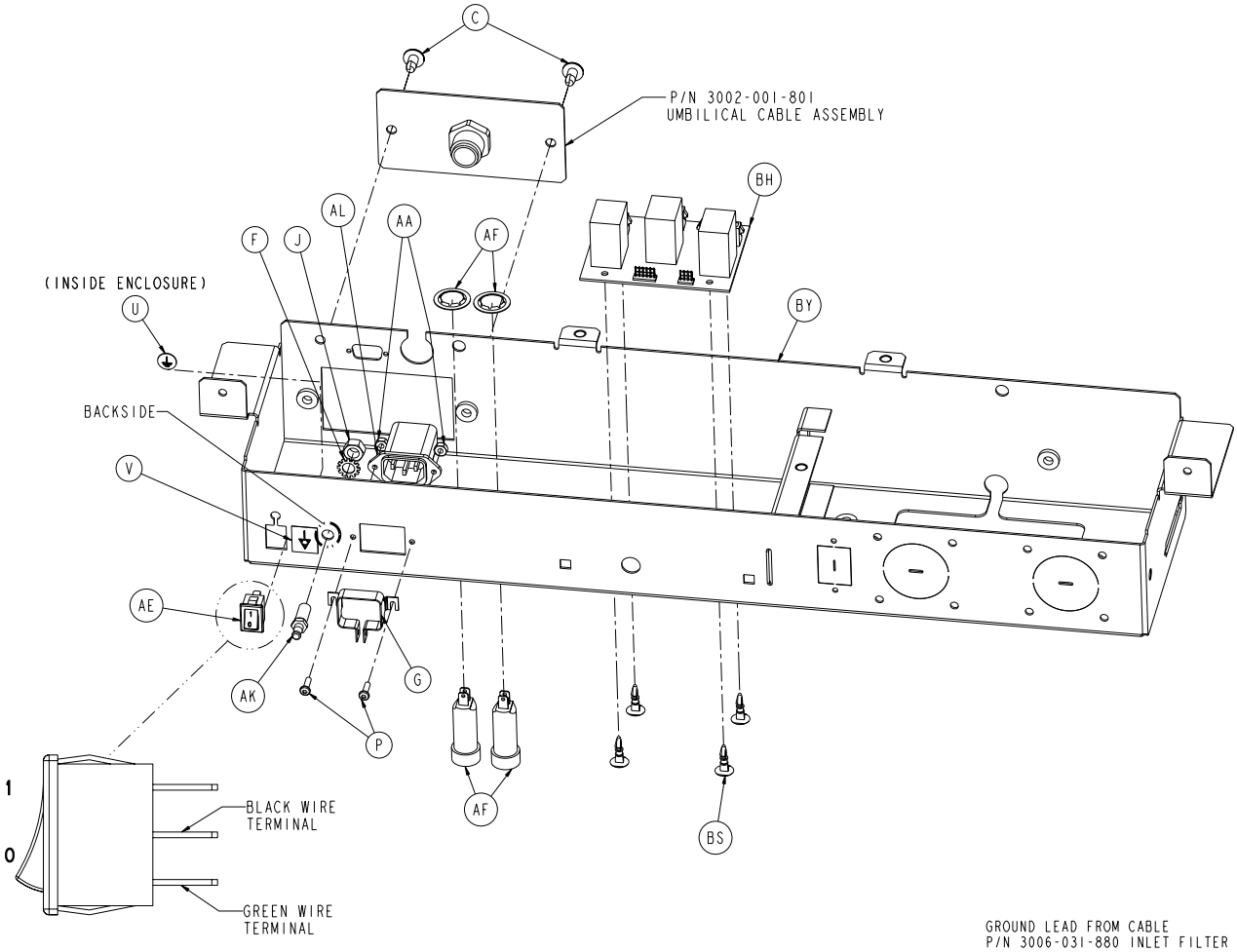

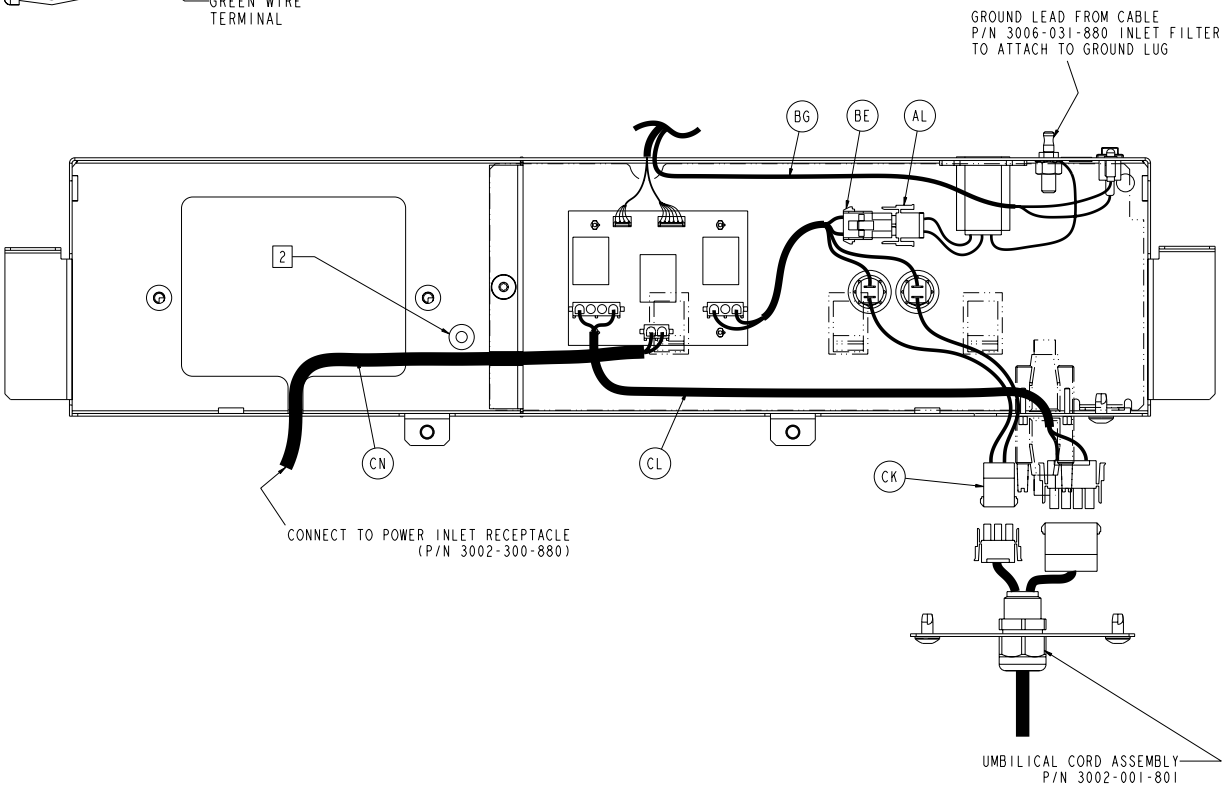

Return To Table of Contents

Optional Zoom® Head End Enclosure Assembly

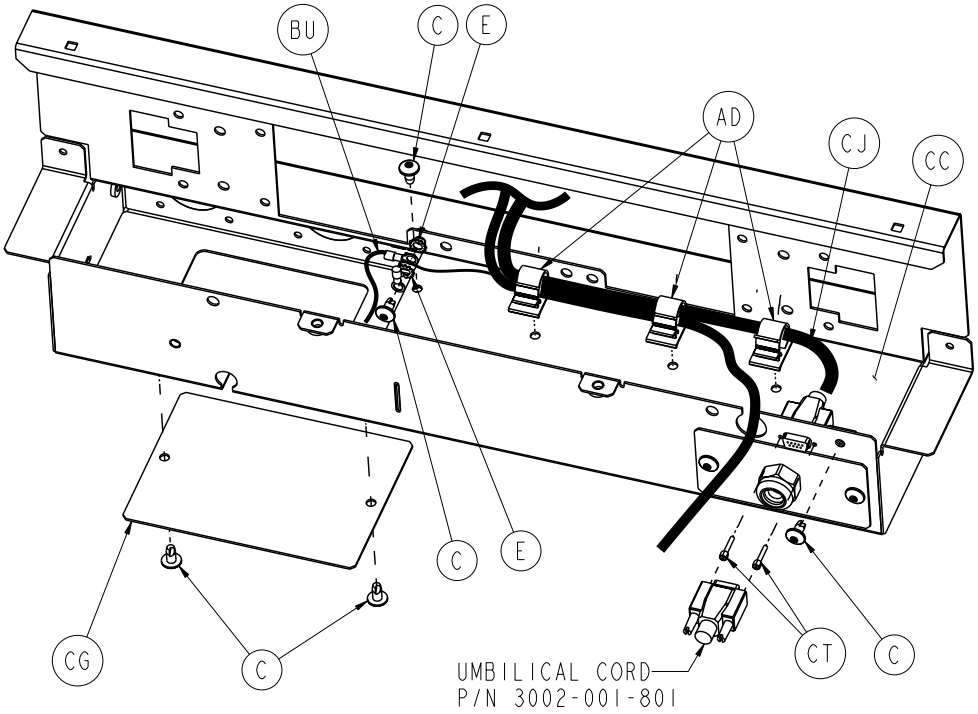

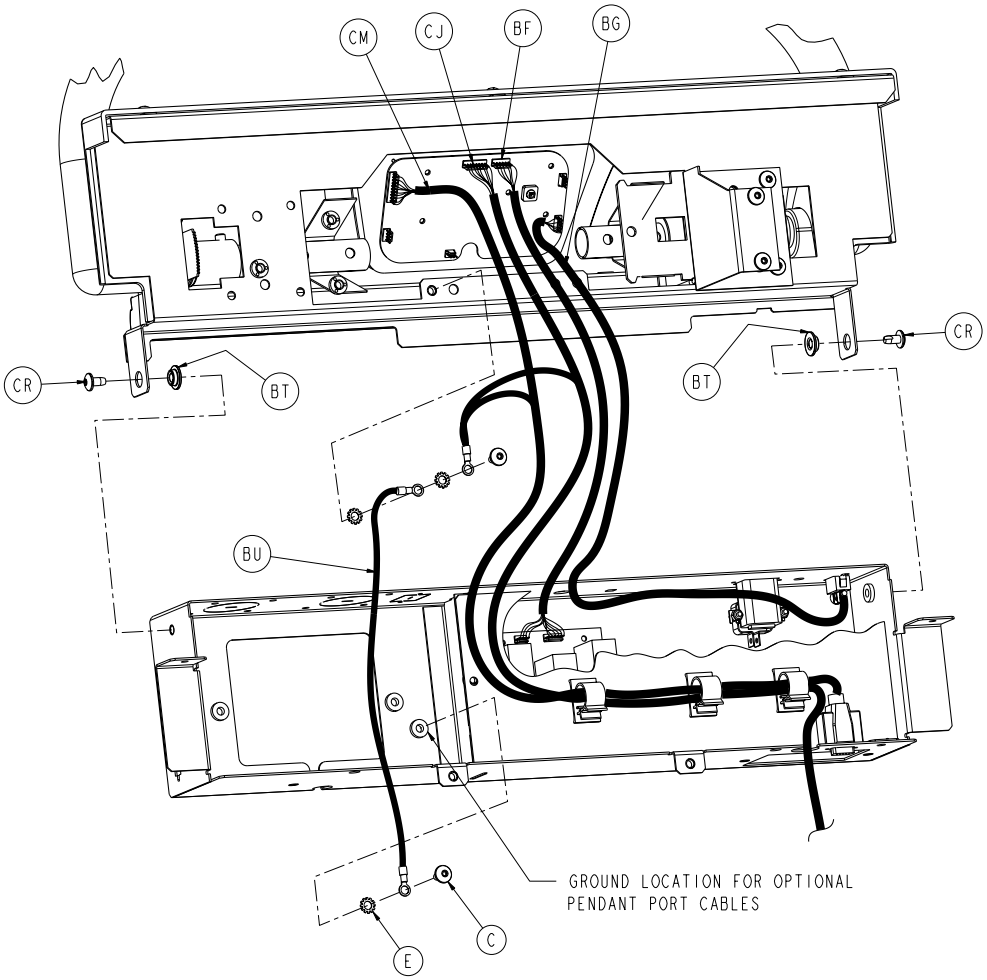

Return To Table of Contents

Optional Zoom® Head End Enclosure Assembly

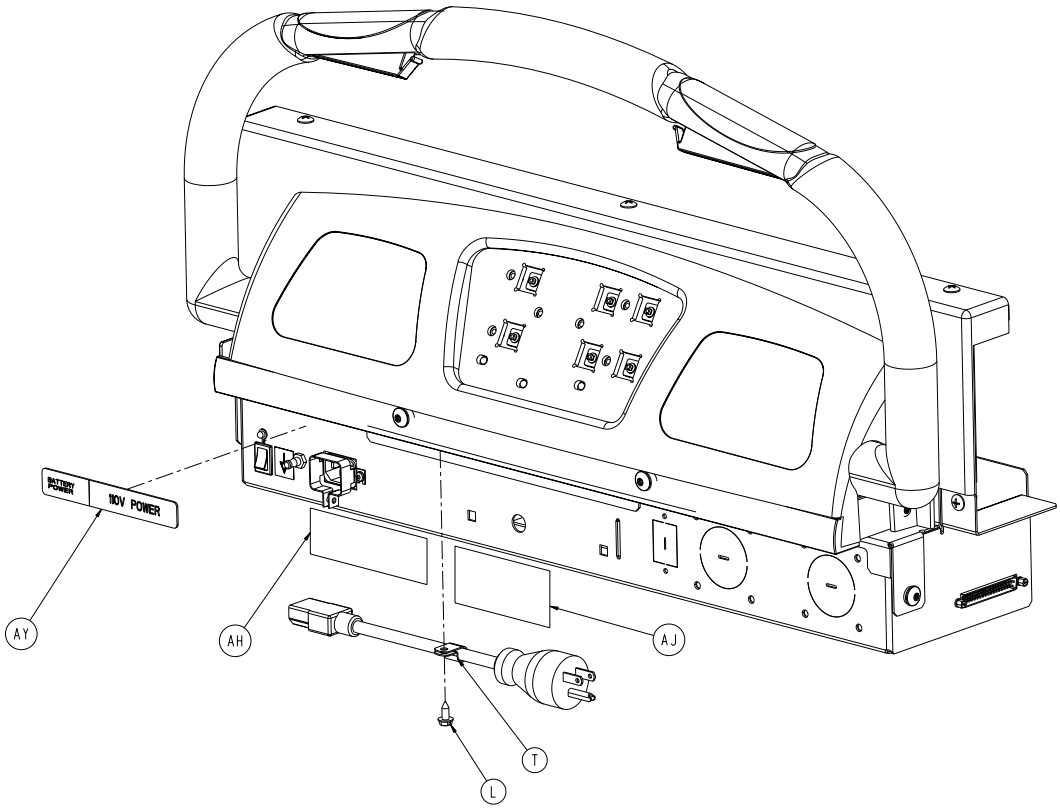

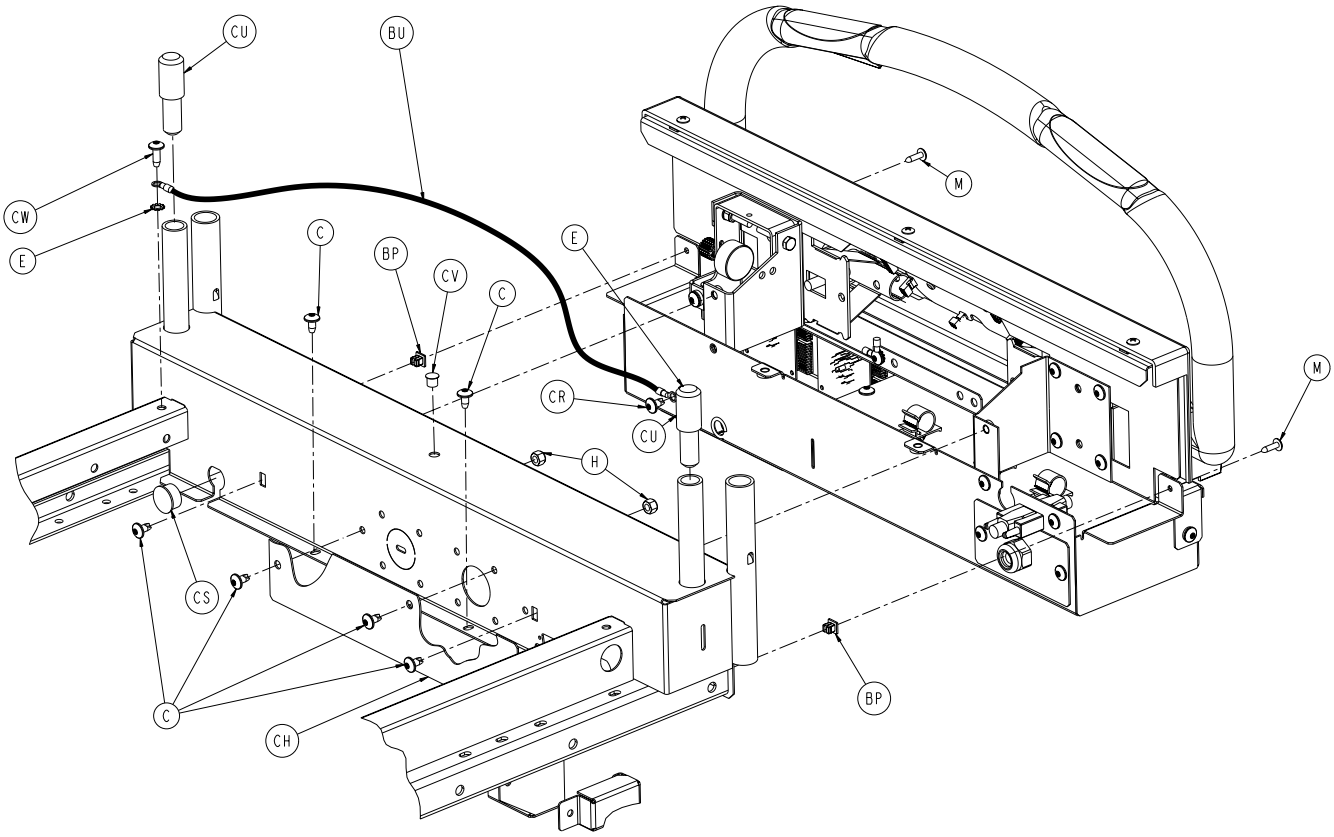

Return To Table of Contents

Optional Zoom® Head End Enclosure Assembly - 3006-131-010

Item	Part No.	Part Name	Qty.
A	0003-050-000	Hex Head Cap Screw	2
B	0004-142-000	Socket head Cap Screw	2
C	0007-052-000	Truss Head Torx	25
D	0011-193-000	Flat Washer	1
E	0013-010-000	External Tooth Lockwasher	5
F	0013-038-000	Lockwasher Extension Spring	1
G	0059-205-000	Connector Lock	1
H	0016-028-000	Nylock Nut	4
J	0016-033-000	Kep Nut	1
K	0021-140-000	Set Screw	4
L	0023-025-000	Hex Washer Head Screw	1
M	0023-080-000	Truss Head Screw	5
N	0023-122-000	High/Low Tapping Screw	6
P	0050-032-000	Pan Head Machine Screw	2
R	0026-303-000	Roll Pin	4
S	0027-022-000	Rue Pin	2
T	0034-021-000	Cord Clamp	1
U	0036-046-000	Ground Label	1
V	0036-115-000	Ground Label	1
W	0038-482-000	Extension Spring	1
Y	0038-448-000	Switch Handle Return Spring	2
AA	0016-023-000	Nylock Hex Nut	2
AB	0052-762-000	Flange Bearing	4
AC	0055-027-000	“U”-type Nut	4
AD	0059-133-000	Push-Mount Wire Clip	3
AE	0059-191-000	On/Off Switch	1
AF	0059-195-000	Circuit Breaker	2
AG	0059-781-000	Position Connector Amp	2
AH	1550-090-001	Hospital Grade Plug Label	1
AJ	2011-001-104	Danger Label	1
AK	2011-011-215	Grounding Lug Tuv	1
AL	3006-031-880	Power Inlet Cable	1
AM	2040-031-051	Pot. Collar Weldment	1
AN	3006-031-054	Bumper Attachment Wldmt.	1
AP	3006-031-062	Display Label	1
AR	2040-031-068	Switch Label	2
AS	2040-031-073	Stop Pin	2
AT	2040-031-074	Control Bar Return Spring	2
AU	2040-031-082	Potentiometer Collar	1
AV	3006-031-101	Drive Instructions Label	1
AW	3006-031-102	Warning Label	1
AY	3006-031-103	Power Label	1
BA	3006-031-105	Logo Label	1
BB	2040-031-106	Potentiometer Gear	1
BC	2040-031-803	Switch Cable	2
BD	2040-031-804	Potentiometer Cable	1
BE	2040-031-808	AC Jumper Cable Charger	1
BF	2040-031-809	CPU/Cross-over PCB Jumper Cable	1
BG	2040-031-810	On/Off Cable	1
BH	2040-031-900	AC Switch Cover PCB Assembly	1
BJ	2040-031-910	Display/CPU Assembly	1
BK	3006-231-064	Control Bar	1
BL	2040-031-110	Pivot Bracket, RH	1
BM	2040-031-111	Pivot Bracket, LH	1
BN	3000-200-253	POT Worm Gear Retainer	1
BP	3000-300-002	Plastic Clip Nut	5
BR	3000-300-114	4” Wire Tie	5
BS	3000-300-115	Standoff	4
BT	3001-300-099	Pivot Bearing	4
BU	3002-300-870	8” Ground Strap	2
BV	3001-400-953	Switch Cap	6
BW	3006-031-011	Top Display Housing Ass’y	1
BY	3006-032-053	HE Enclosure Wldmt. Bottom	1
CA	3006-032-063	Head End Enclosure, Top	1
CB	3006-231-069	Display Bumper	1
CC	3002-031-092	Head End Electronics Cover	1
CD	3002-031-108	Potentiometer Mount	1
CE	3006-032-109	HE Reinforcement Brkt, LT	1
CF	3006-032-110	HE Reinforcement Brkt, RT	1
CG	3002-031-112	Pendant Port Cover	1
CH	3002-032-115	Cover Plate	1
CJ	3002-031-801	Zoom® CPU Signal Jumper	1
CK	3002-031-802	Zoom® Breaker Jumper	1
CL	3002-031-803	Zoom® Cross-over PCB Jumper	1
CM	3002-007-805	Zoom® to Bed CPU Jumper	1
CN	3002-031-805	Bed AC Power Jumper	1
CP	0004-325-000	Shoulder Bolt Cap Screw	1
CR	0007-063-000	Truss Head Screw	7
CS	0037-240-000	Black, Plastic Hole Plug	1
CT	3001-300-007	Jack Screw	2
CU	3002-031-114	Headboard Extender	2
CV	0059-738-000	Black Heyco Plug	1
CW	0007-065-000	Truss Head Screw	1
CY	0044-032-000	Pressure Sensitive Tape	4

Return To Table of Contents

For Reference Only: 5212-131-010

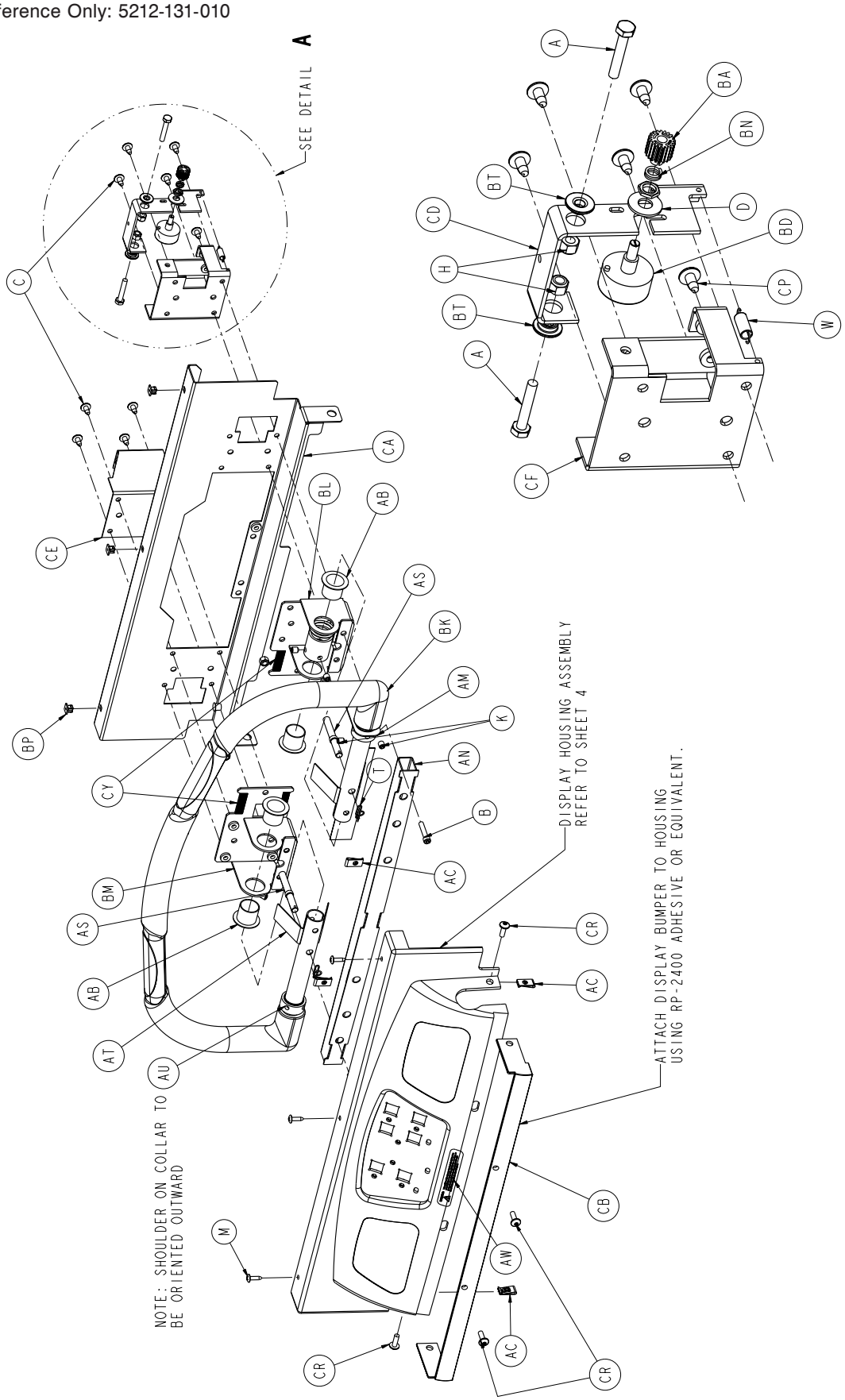

Return To Table of Contents

Optional Zoom® Litter Assembly, *i*Bed® Wireless Option

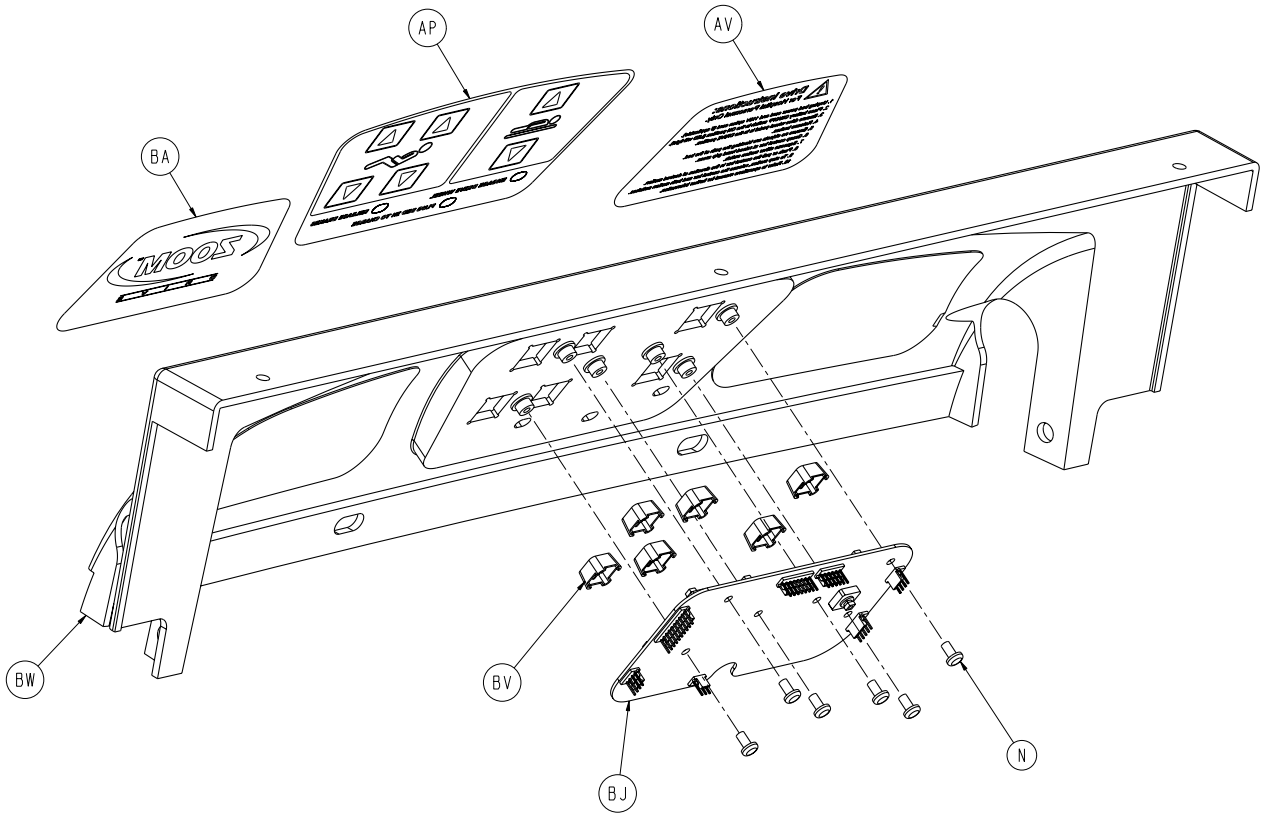

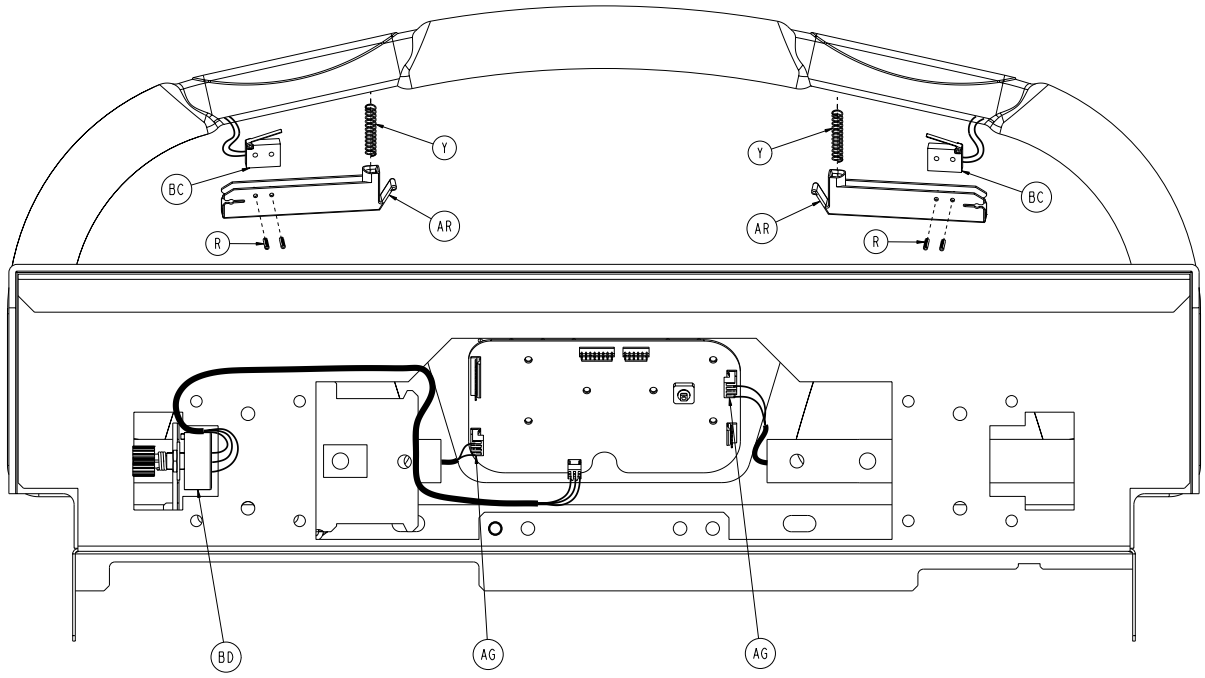

Return To Table of Contents

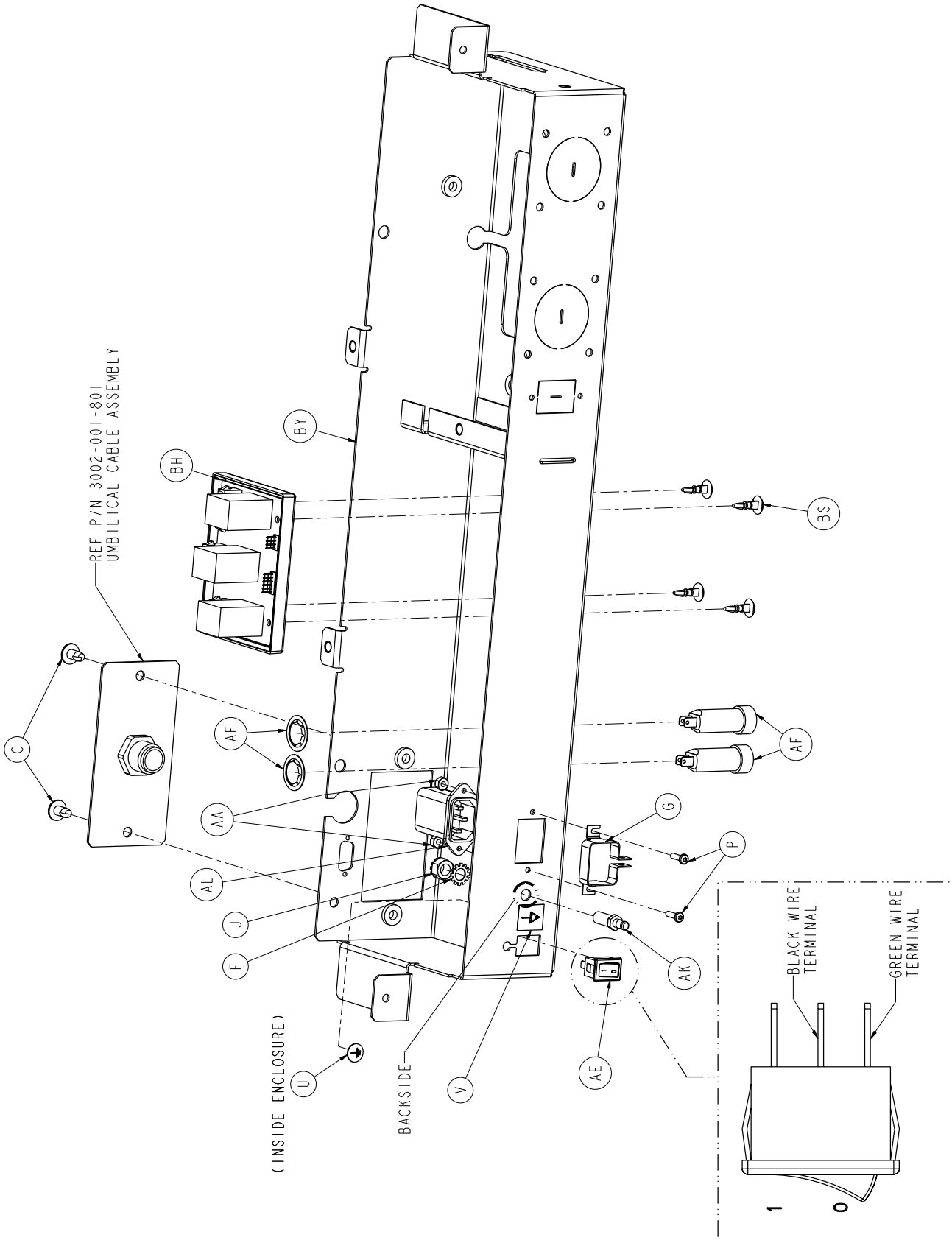

Return To Table of Contents

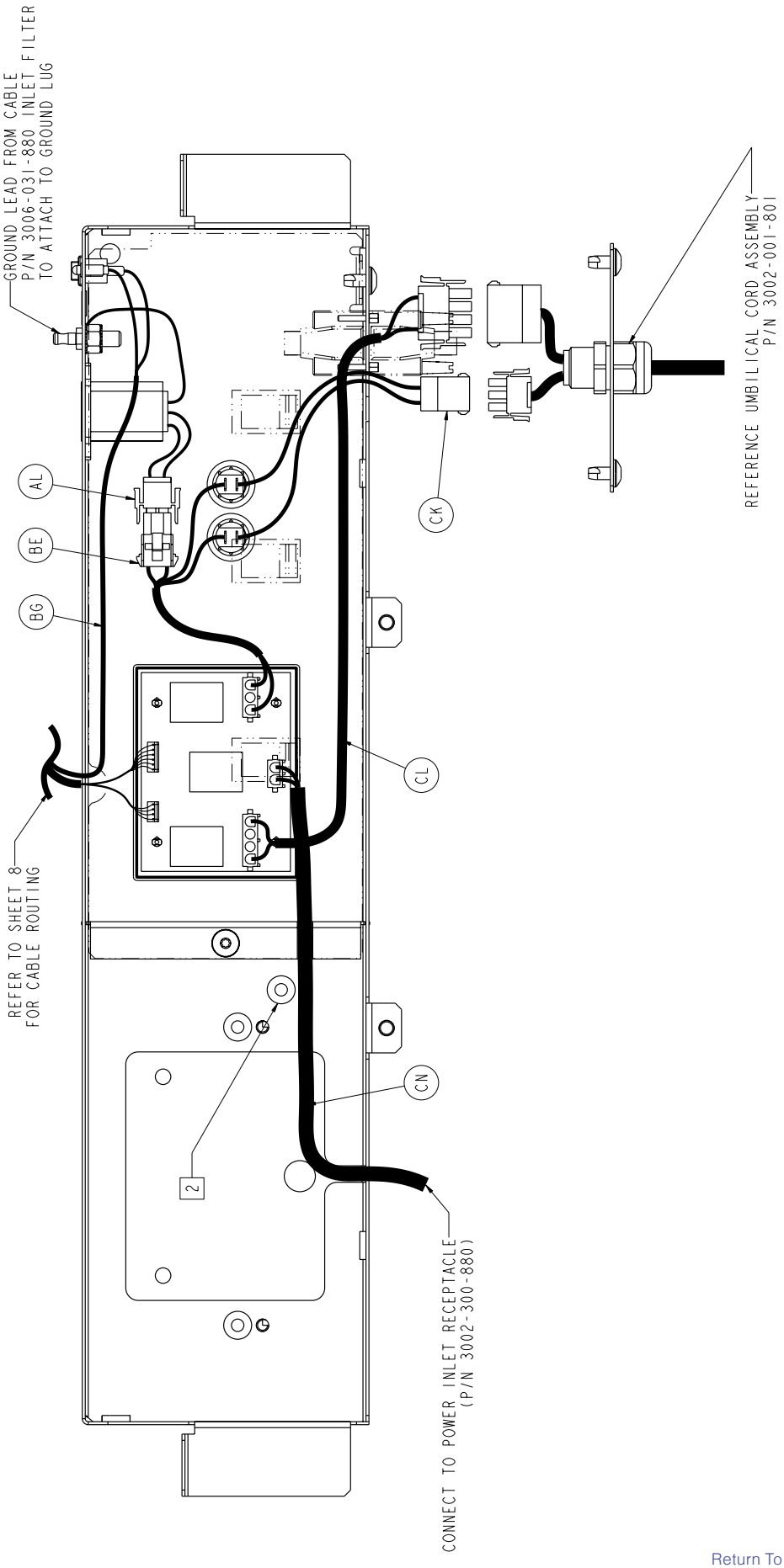

Return To Table of Contents

Optional Zoom® Litter Assembly, *i*Bed® Wireless Option

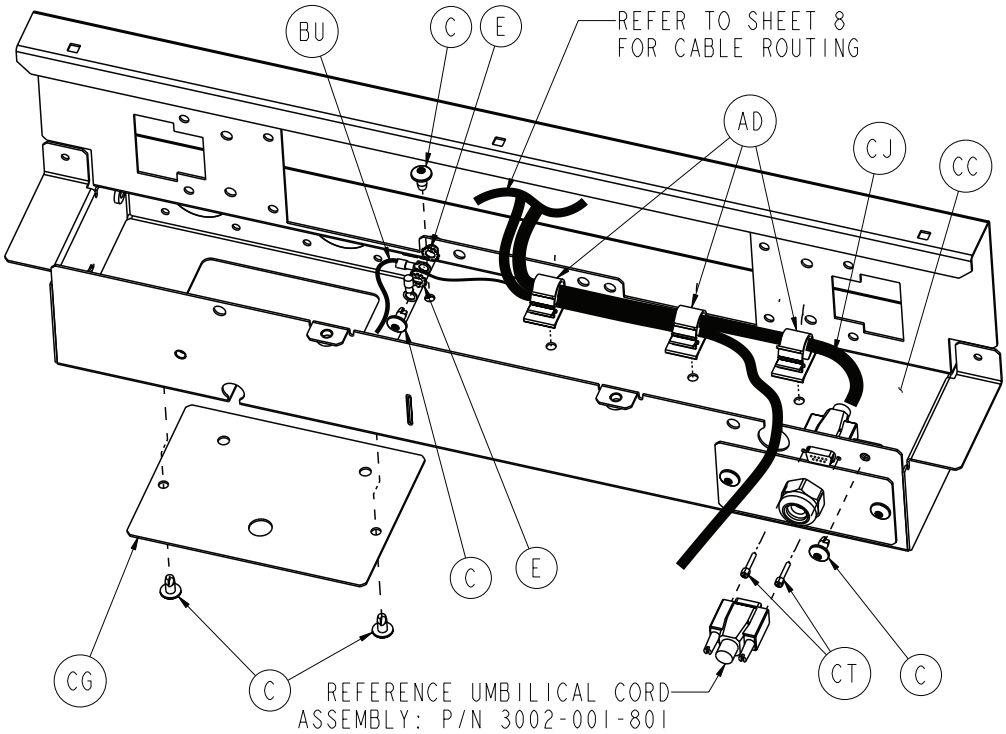

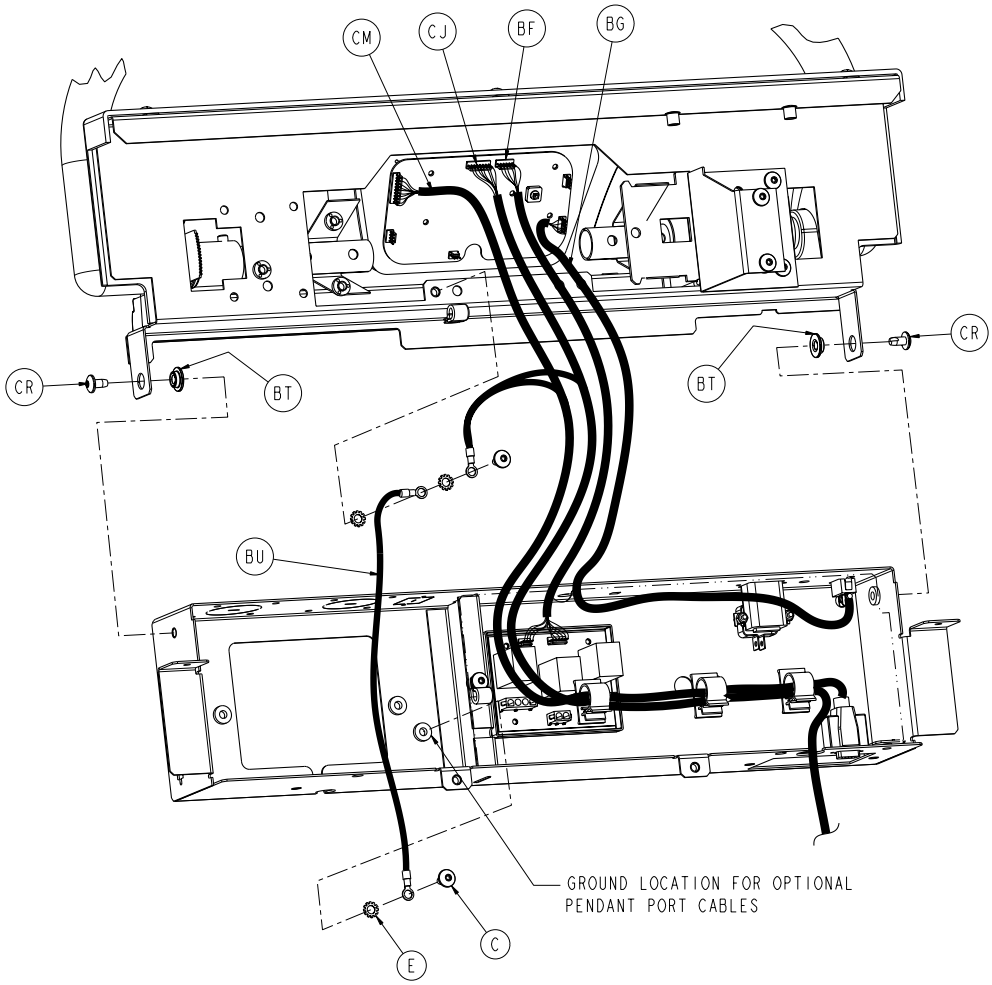

Return To Table of Contents

Optional Zoom® Litter Assembly, *i*Bed® Wireless Option

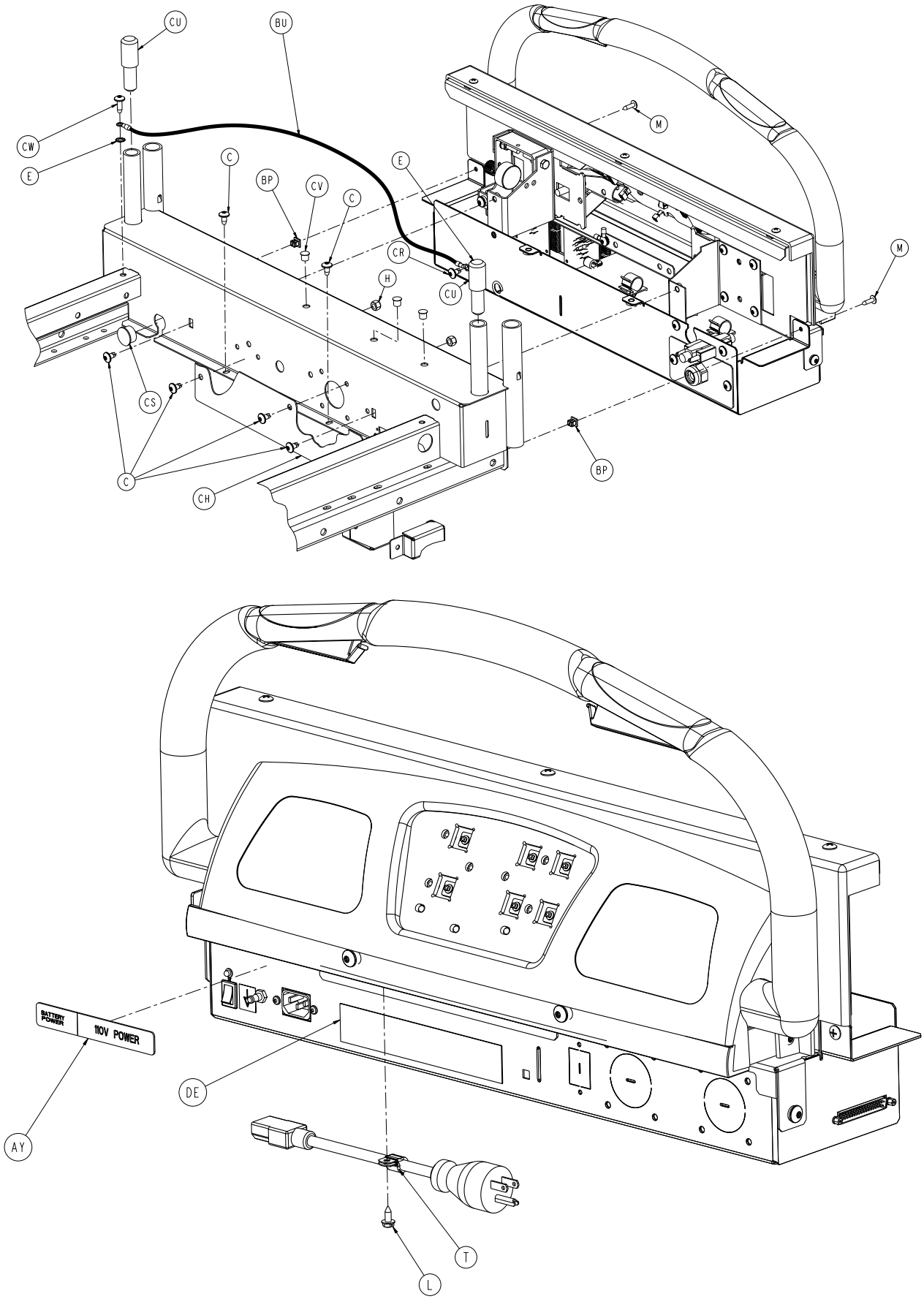

Return To Table of Contents

Optional Zoom® Litter Assembly, *i*Bed® Wireless Option

Optional Zoom® Litter Assembly, *i*Bed® Wireless Option - 5212-131-010

Item	Part No.	Part Name	Qty.
A	0003-050-000	Hex Head Cap Screw	2
B	0004-142-000	Socket Head Cap Screw	2
C	0007-052-000	Truss Head Torx	25
D	0011-193-000	Flat Washer	1
E	0013-010-000	1/4” External Tooth Lockwasher	6
F	0013-038-000	Lockwasher Ext. Spring	1
G	0059-205-000	Connector Lock	1
H	0016-028-000	Nylock Nut	4
J	0016-033-000	Kep Nut	1
K	0021-140-000	Set Screw	4
L	0023-025-000	Hex Washer Head Screw	1
M	0023-080-000	Truss Head Screw	5
N	0023-112-000	Hi-Low Tapping Screw	6
P	0050-032-000	Pan Head Machine Screw	2
R	0026-303-000	Roll Pin	4
S	0027-022-000	Rue Pin	2
T	0034-021-000	Cord Clamp	1
U	0036-046-000	Ground Label	1
V	0036-115-000	Ground Label	1
W	0038-482-000	Extension Spring	1
Y	0038-448-000	Switch Handle Return Spring	2
AA	0016-023-000	Nylock Hex Nut	2
AB	0052-762-000	Flange Bearing	4
AC	0055-027-000	“U” Type Nut	4
AD	0059-133-000	Push-Mount Wire Clip	3
AE	0059-191-000	On/Off Switch	1
AF	0059-195-000	Circuit Breaker	2
AG	0059-781-000	4 Position Connector	2
AK	2011-001-215	Grounding Lug Tuv	1
AL	3006-031-880	Power Inlet Cable	1
AM	2040-031-051	Potentiometer Collar Weldment	1
AN	3006-031-054	Bumper Attachment Weldment	1
AP	3006-031-062	Label, Display	1
AR	2040-031-068	Momentary Contact Switch Handle	2
AS	2040-031-073	Stop Pin	2
AT	2040-031-074	Control Bar Return Spring	2
AU	2040-031-082	Potentiometer Collar	1
AV	3006-031-101	Label, Drive Instructions	1
AW	3006-031-102	Label, Warning	1
AY	3006-031-103	Label, Power	1
BA	3006-031-105	Label, Logo	1
BB	2040-031-106	Potentiometer Gear	1
BC	2040-031-803	Momentary Contact Switch Cable	2
BD	2040-031-804	Potentiometer Cable	1
BE	2040-031-808	Charger AC Jumper Cable	1
BF	2040-031-809	CPU/Cross-Over PCB Jumper Cable	1
BG	2040-031-810	On/Off Cable	1
BH	2040-031-900	AC Switchover PCB Assy	1
BJ	2040-031-910	CPU Display Assembly	1
BK	3006-231-064	Control Bar	1
BL	2040-031-110	Pivot Bracket, Right	1
BM	2040-031-111	Pivot Bracket, Left	1
BN	3000-200-253	Pot Worm Gear Retainer	1
BP	3000-300-002	Nut, Plastic Clip	5
BR	3000-300-114	4” Wire Tie	5
BS	3000-300-115	Standoff	4
BT	3001-300-099	Pivot Bearing	4
BU	3002-300-870	8” Ground Strap	3
BV	3001-400-953	Switch Cap	6
BW	3006-031-011	Top Display Housing Assy	1
BY	3006-141-053	Bottom Enclosure Weldment, Head End	1
CA	3006-032-063	Top Enclosure, Head End	1
CB	3006-231-069	Display Bumper	1
CC	3006-031-092	Enclosure Cover, White, Head End	1
CD	3002-031-108	Potentiometer Mount	1
CE	3006-032-109	Reinforcement Bracket, Left, Head End	1
CF	3006-032-110	Reinforcement Bracket, Right, Head End	1
CG	3006-031-113	Pendant Port Cover	1
CH	3006-032-115	Cover Plate	1
CJ	3002-031-801	Zoom® CPU Signal Jumper	1
CK	3002-031-802	Zoom® Breaker Jumper	1
CL	3002-031-803	Zoom® Cross-Over PCB Jumper	1
CM	3002-007-805	Zoom® To Bed CPU Jumper	1
CN	3002-031-805	Bed AC Power Jumper	1
CP	0004-325-000	Socket Bottom Head Cap Screw	1
CR	0007-063-000	Truss Head Screw	7
CS	0037-240-000	Hole Plug	1
CT	3001-300-007	M/F Screw	2
CU	3002-031-114	Headboard Extender	2
CV	0059-738-000	Heyco Hole Plug	3
CW	0007-065-000	Truss Head Screw	1
CY	0044-032-000	Pressure Sensitive Tape (1.5”)	4
DE	5212-100-807	Label, Caution	1

Return To Table of Contents

Optional Battery Backup/Zoom® Assembly, *i*Bed® Wireless Option

For Reference Only: 5212-999-005

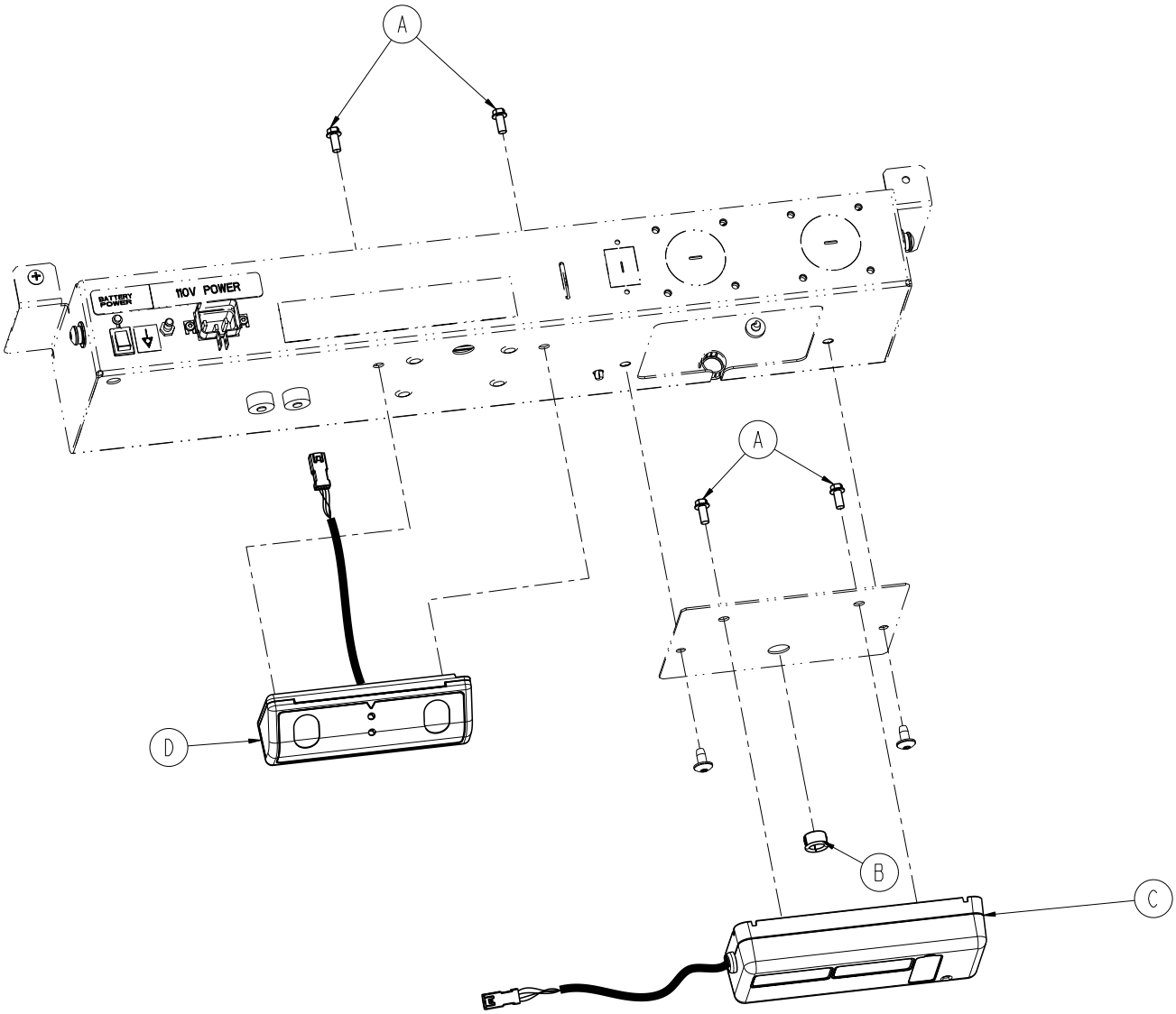

Optional Battery Backup/Zoom® Assembly, *i*Bed® Wireless Option - 5212-999-005 (Reference Only)

Item	Part No.	Part Name	Qty.
A	0023-126-000	Hex Washer Head Hi-Lo Fastener	4
B	0030-070-000	Cable Management Bushing	1
C	5212-300-012	Wireless Module Assembly	1
D	5212-300-053	I.R. Module Assembly	1

Return To Table of Contents

Head End Siderail Assembly

For Reference Only:
3006-400-105 (LH)
3006-400-205 (RH)

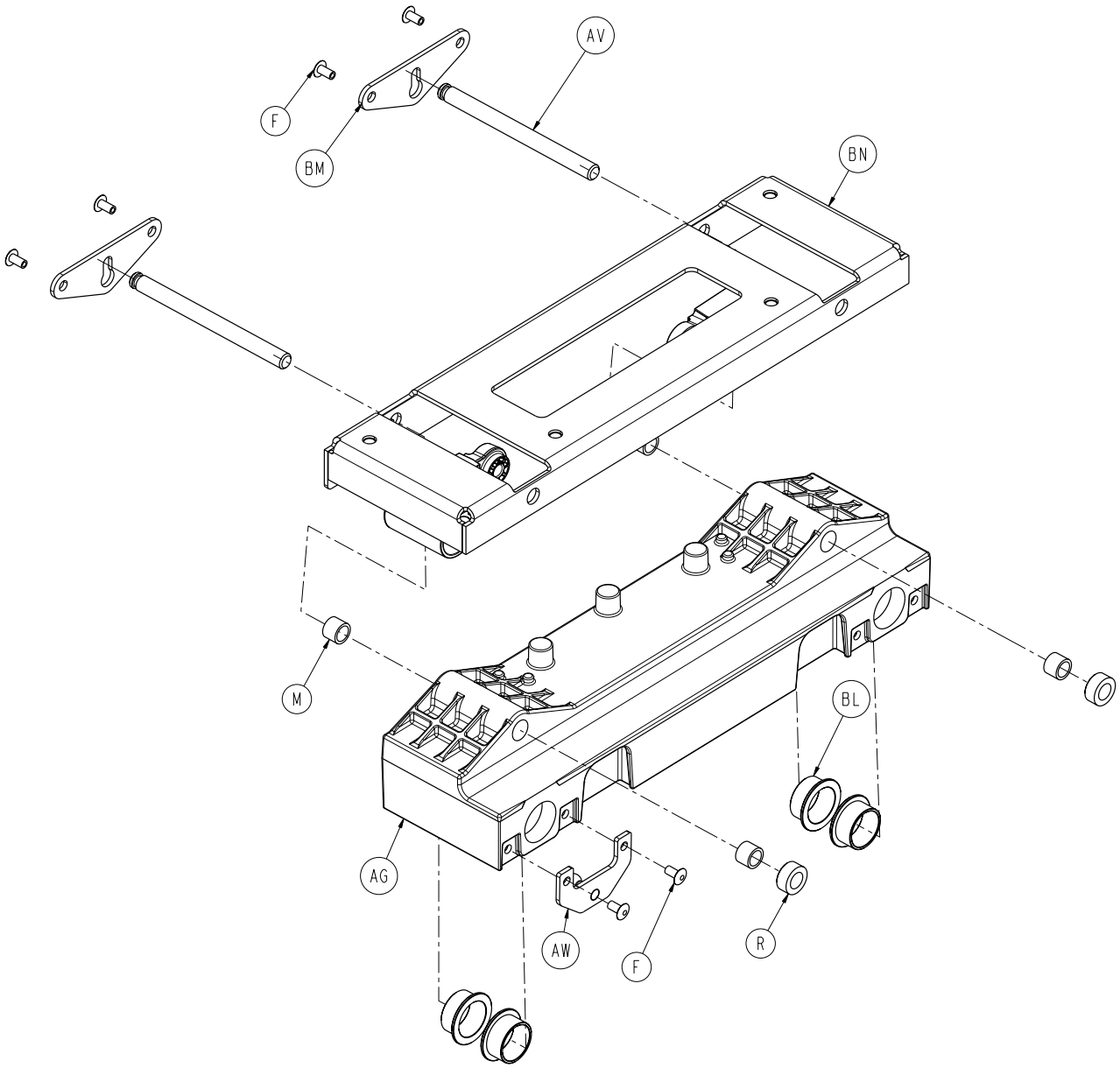

(LEFT SIDERAIL SHOWN)

Return To Table of Contents

Head End Siderail Assembly

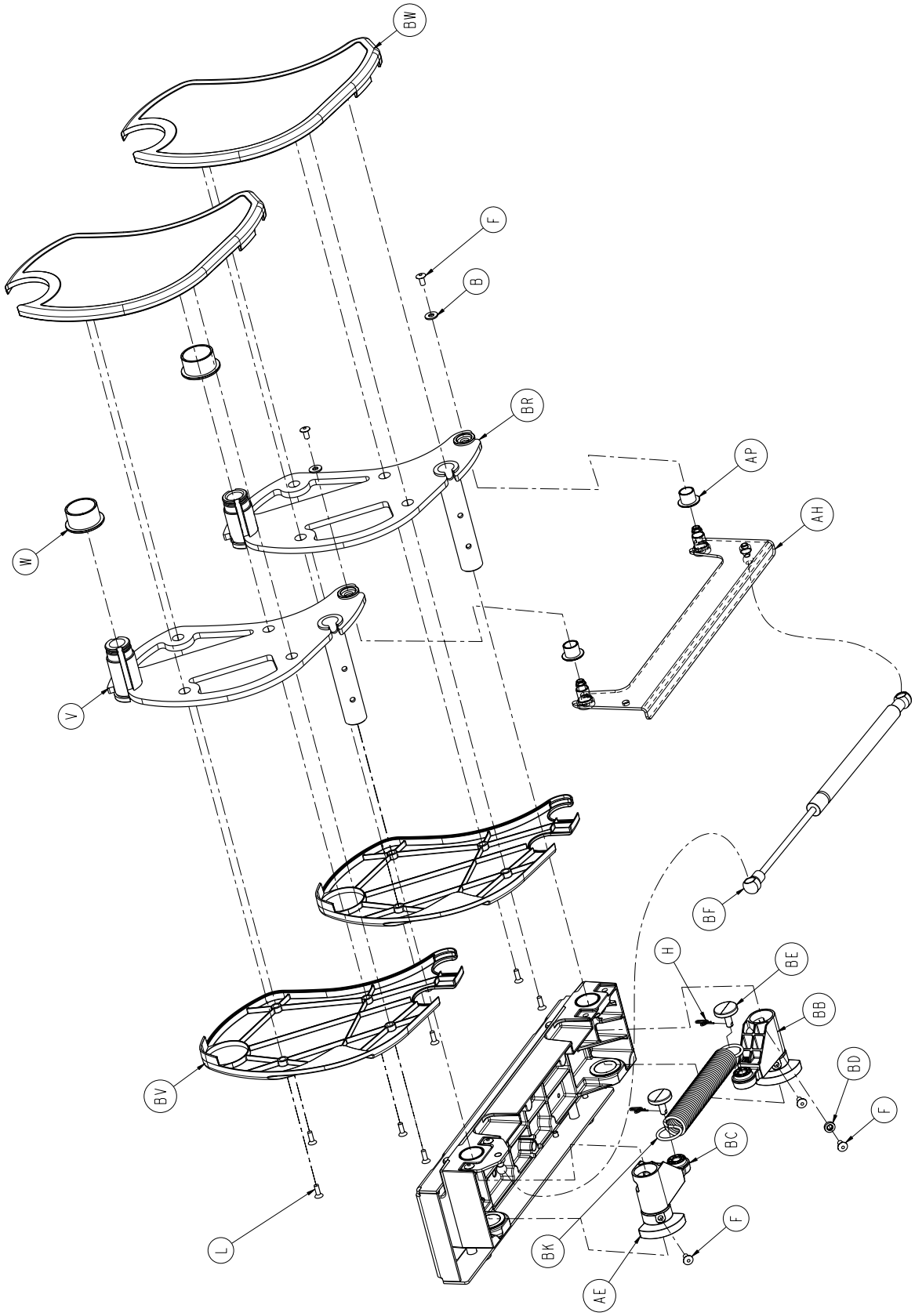

Return To Table of Contents

Head End Siderail Assembly

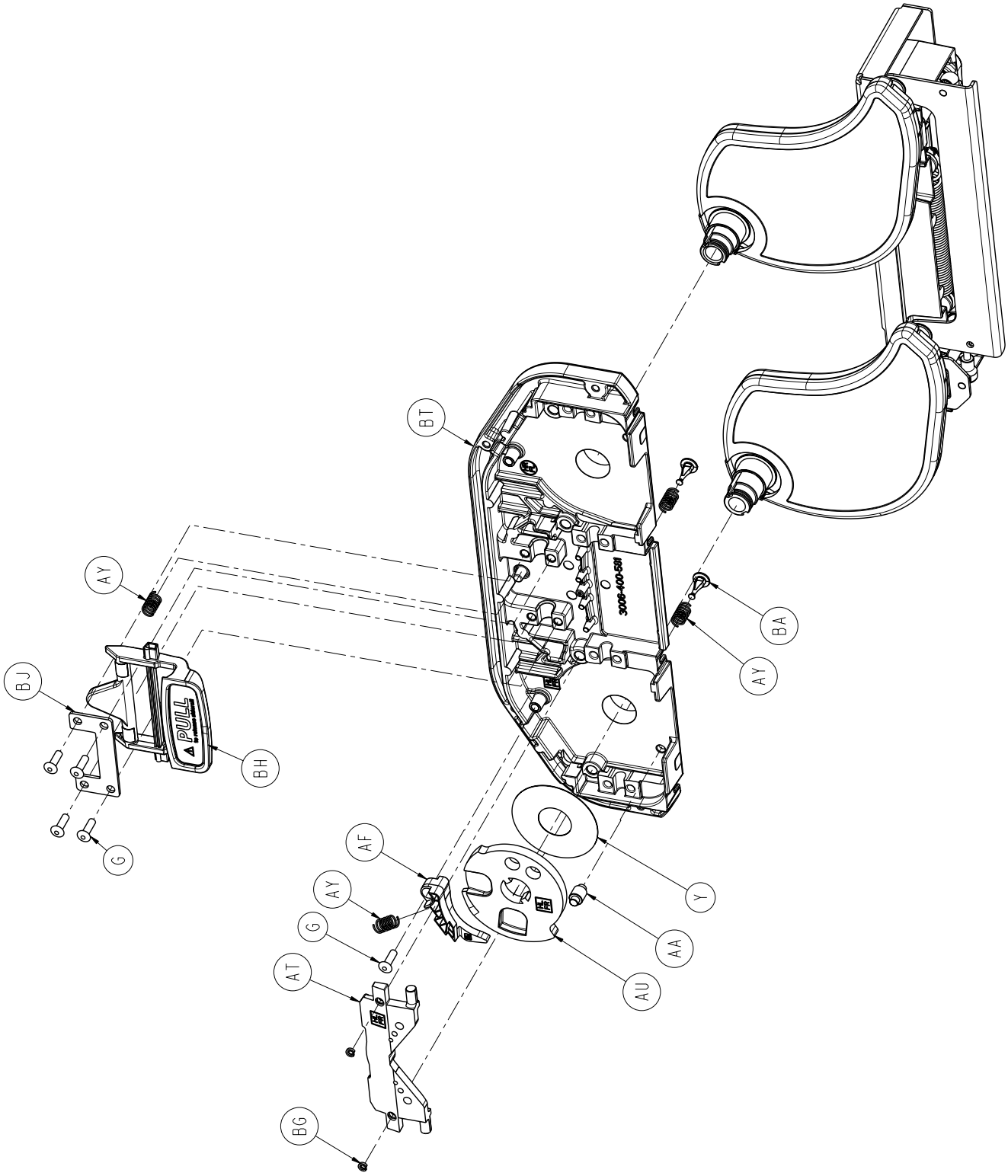

Return To Table of Contents

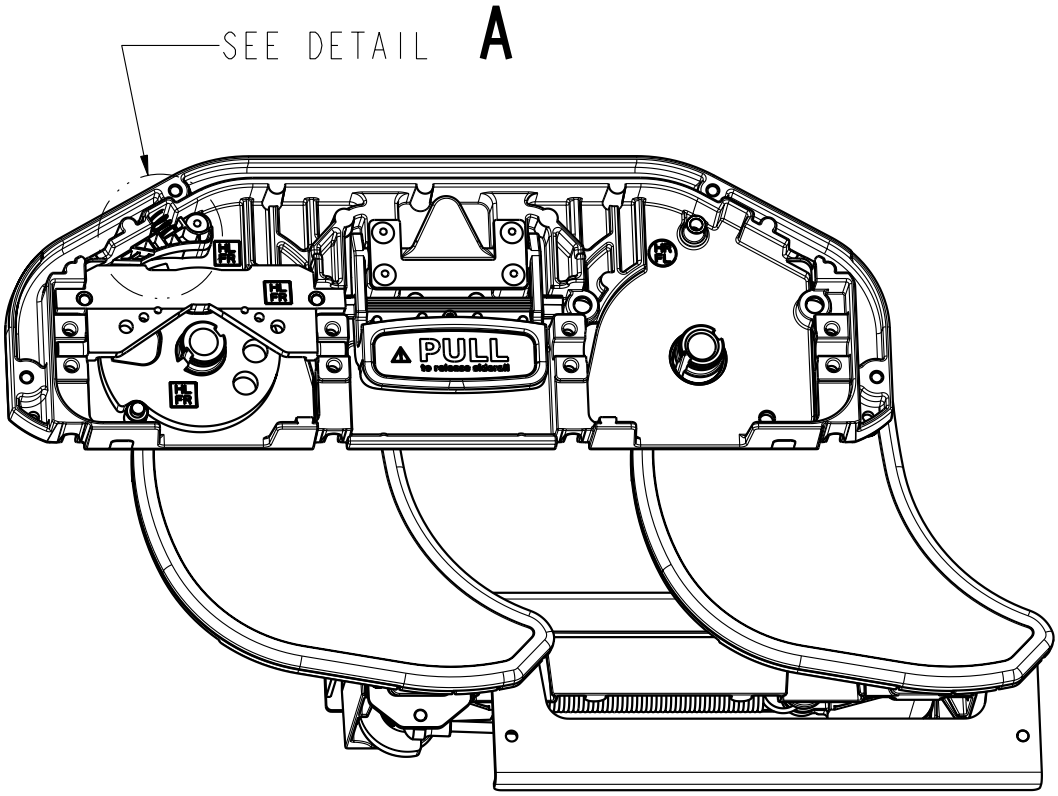

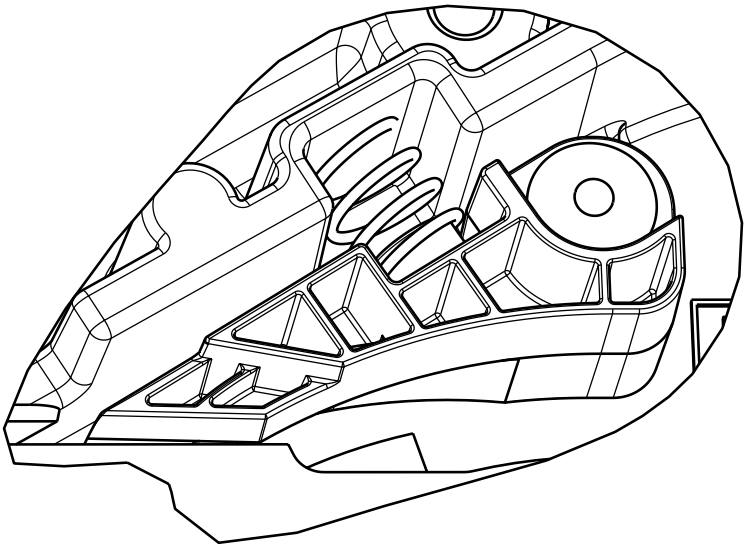

DETAIL A

Return To Table of Contents

Head End Siderail Assembly

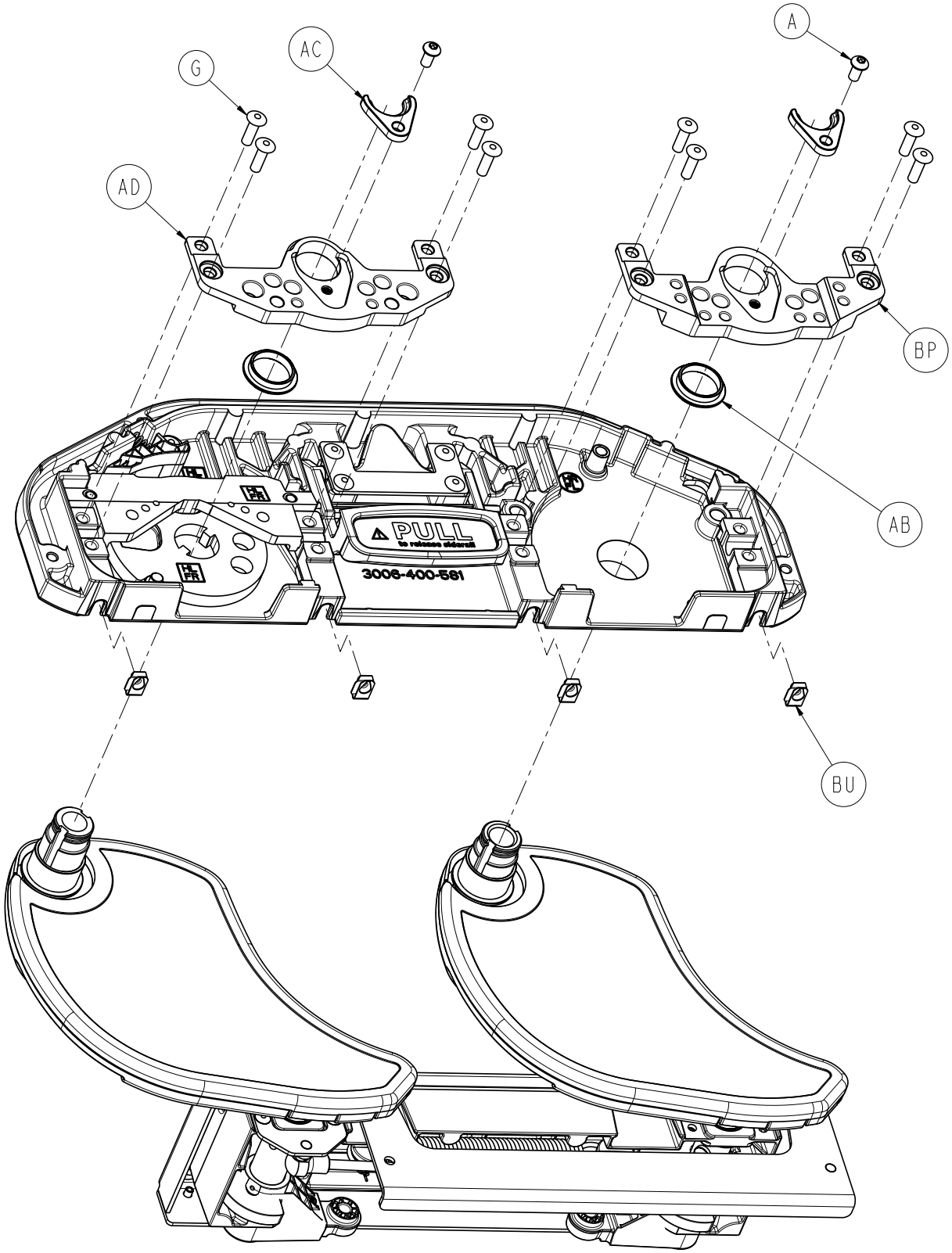

Return To Table of Contents

Head End Siderail Assembly

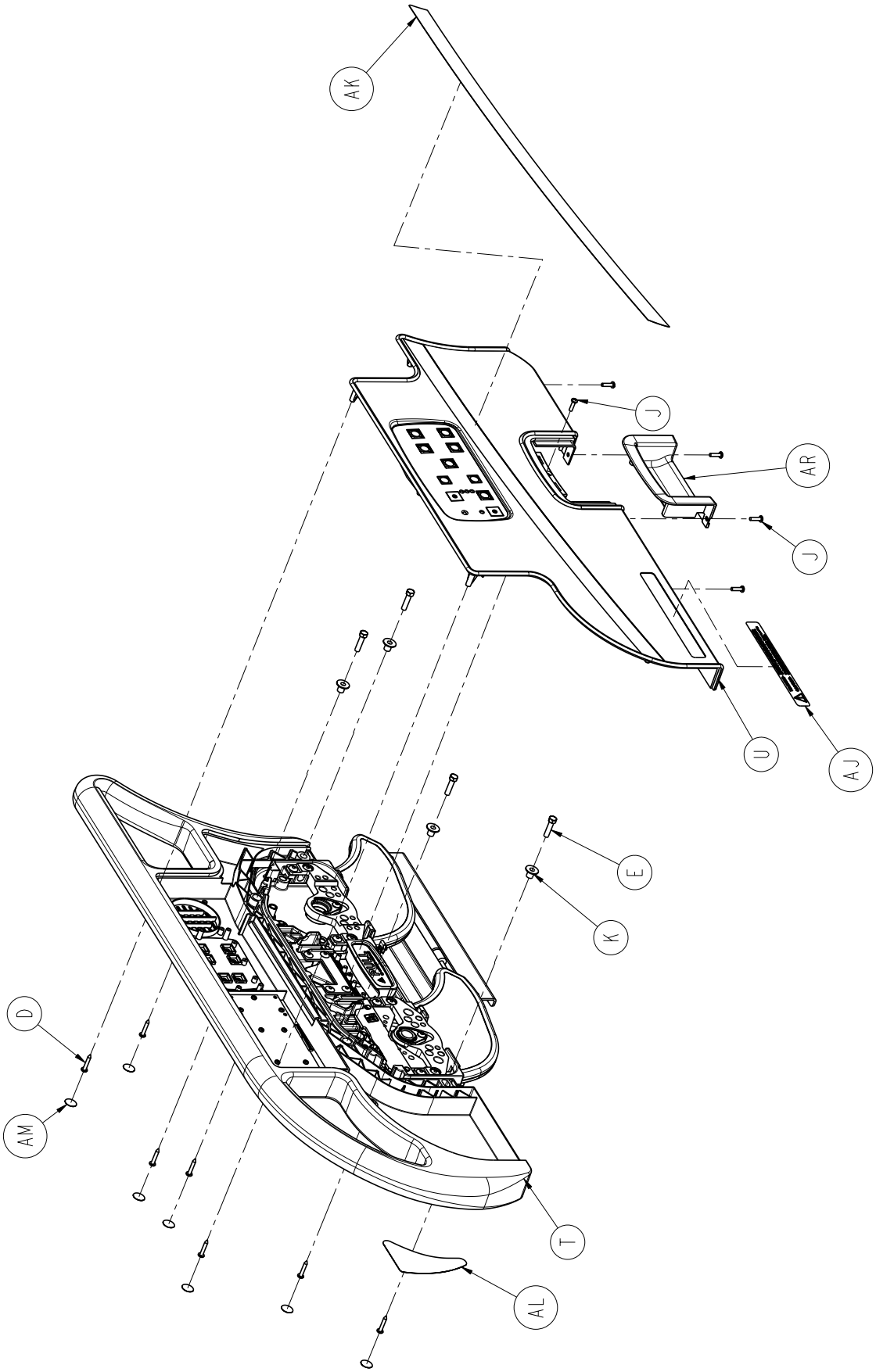

Return To Table of Contents

Head End Siderail Assembly

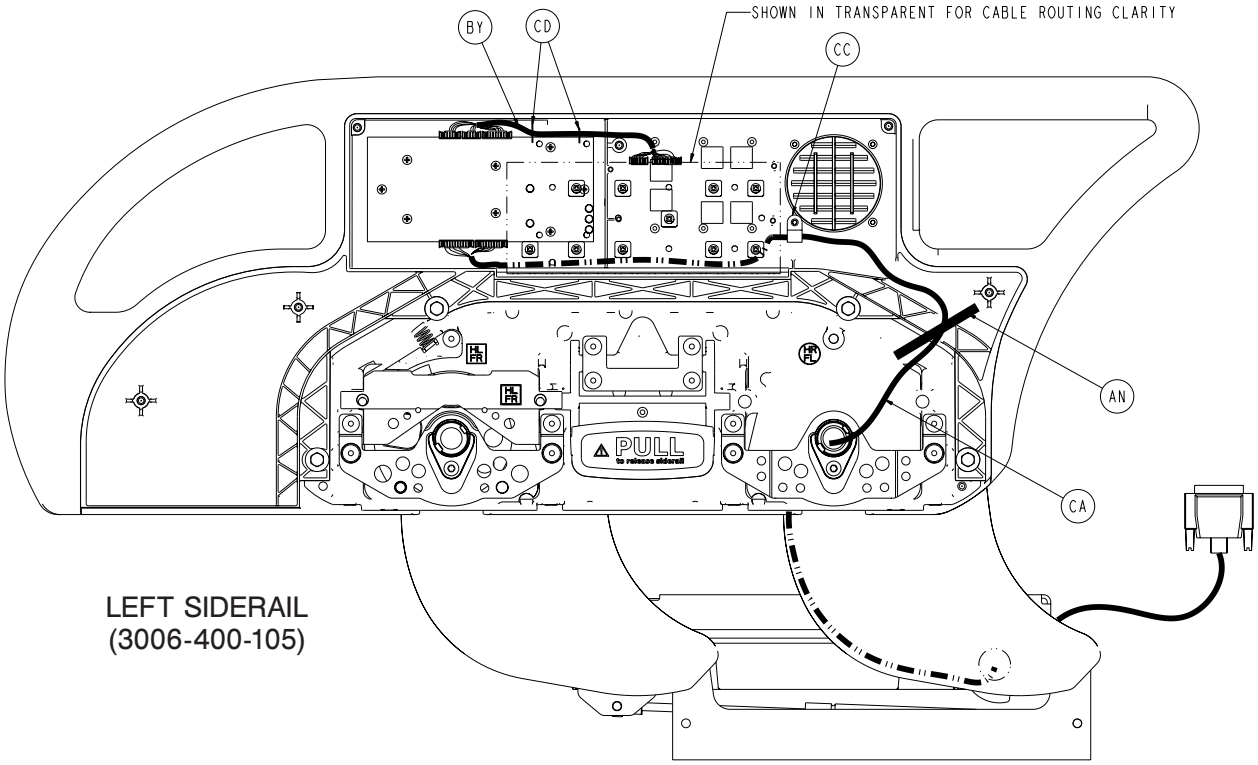

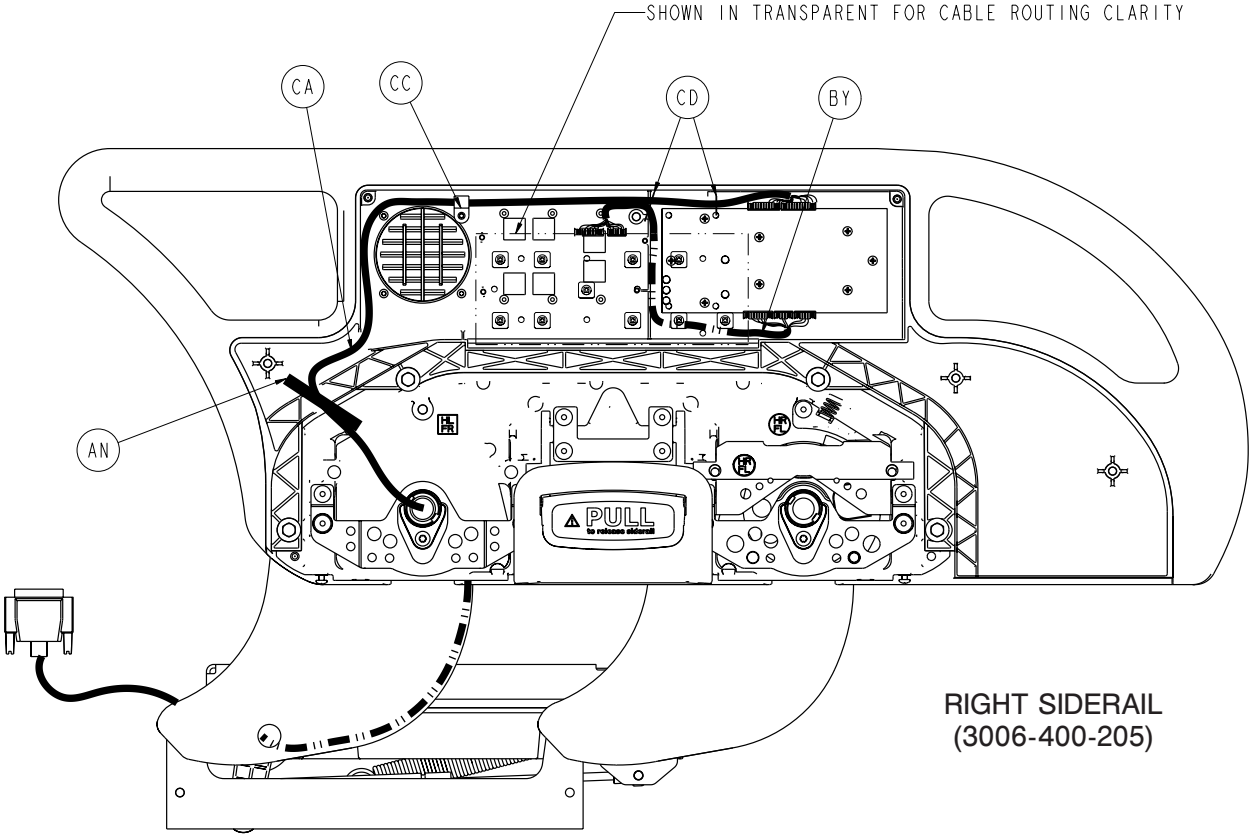

Return To Table of Contents

Head End Siderail Assembly, Common Components - (Reference Only)

Left Common Components - 3006-400-105

Item	Part No.	Part Name	Qty.
A	0004-589-000	Button Head Cap Screw	2
B	0011-302-000	Washer	2
D	0023-076-000	High/Low Tapping Screw	7
E	0003-392-000	Hex Head Machine Screw	4
F	0025-079-000	Dome Head Rivet	11
G	0025-147-000	Pop Rivet	13
H	0027-020-000	Rue Ring Cotter	2
J	0050-005-000	Pan Head Machine Screw	5
K	3006-400-574	Siderail Spacer	4
L	0001-072-000	Flathead Machine Screw	8
M	3000-400-557	Sleeve Bearing	4
R	3006-400-495	Siderail Spacer	2
T	3006-400-130	Inner Panel Siderail Ass'y, Head End, Left	1
U	3006-400-125	Outer Panel Siderail Ass'y, Head End, Left	1
V	3006-400-515	Arm Weldment	1
W	3006-400-513	Bearing	2
Y	3006-400-541	Pivot Washer	1
AA	3006-400-516	Hard Stop Pin	1
AB	3006-400-517	Bearing	2
AC	3006-400-518	Pivot Retainer Clip	2
AD	3006-400-523	Latch/Shaft Retainer	1
AE	3006-400-524	Pivot Retainer Sleeve	2
AF	3006-400-505	Bypass Arm	1
AG	3006-400-528	Siderail Carrier, Machined	1
AH	3006-400-535	Timing Link Weldment	1
AJ	3006-400-656	Warning Label	1
AK	3006-400-106	Siderail Head End Label, Left	1
AL	3006-400-107	Siderail Head End & Foot End Blank Label, Left	1
AM	3006-400-522	Siderail Fastener Cover Label	7
AN	3006-400-208	Cable Restraint Label	1
AP	3006-400-532	Igus Bearing	2
AR	3006-400-533	Accent Panel, Release Handle	1
AT	3006-400-534	Latch Plate	1
AU	3006-400-537	Latch Disk	1
AV	3006-400-544	Glide Rod	2
AW	3006-400-540	Gas Spring Mounting Bracket	1
AY	3006-400-549	Latch Return Spring	4
BA	3006-400-551	Spring Plunger	2
BB	3006-400-552	Spring Arm, A	1
BC	3006-400-553	Spring Arm, B	1
BD	3006-400-554	Spring Arm Stop	1
BE	3006-400-557	Spring Arm Cap	2
BF	3006-400-560	Gas Spring	1
BG	3006-400-561	Spring Plunger Clip	2
BH	3006-400-570	Release Handle Assembly	1
BJ	3006-400-566	Handle Retainer Plate	1
BK	3006-400-567	Extension Spring	1
BL	3006-400-568	Bearing	4
BM	3006-400-569	Glide Rod Restraint	2
BN	3006-400-498	Mounting Bracket	1
BP	3009-400-573	Short Latch/Shaft Retainer	1
BR	3006-400-576	Short Arm Weldment	1
BT	3006-400-581	Machined Support Plate	2
BU	3006-400-584	Speed Nut	4
BV	3006-400-618	Inner-A Arm Cover	2
BW	3006-400-619	Outer-A Arm Cover	3
BY	3006-400-804	Main to Outside Siderail Cable, LH	1
CA	3006-400-862	Siderail Cable	1
CC	3000-300-478	CPR Conduit Clamp	1
CD	3000-300-114	4" Cable Tie	5

Return To Table of Contents

Head End Siderail Assembly, Common Components - (Reference Only)

Right Common Components - 3006-400-205

Item	Part No.	Part Name	Qty.
A	0004-589-000	Button Head Cap Screw	2
B	0011-302-000	Washer	2
D	0023-076-000	Pan Head Tapping Screw	7
E	0003-392-000	Hex Head Machine Screw	4
F	0025-079-000	Dome Head Rivet	11
G	0025-147-000	Pop Rivet	13
H	0027-020-000	Rue Ring Cotter	2
J	0050-005-000	Pan Head Machine Screw	5
K	3006-400-574	Siderail Spacer	4
L	0001-072-000	Flathead Machine Screw	8
M	3000-400-557	Sleeve Bearing	4
R	3006-400-495	Siderail Spacer	2
T	3006-400-230	Inner Panel, Head End Siderail Assembly, Right	1
U	3006-400-225	Outer Panel, Head End Siderail Assembly, Right	1
V	3006-400-510	Arm Weldment	1
W	3006-400-513	Bearing	2
Y	3006-400-514	Pivot Washer	1
AA	3006-400-516	Hard Stop Pin	1
AB	3006-400-517	Bearing	2
AC	3006-400-518	Pivot Retainer Clip	2
AD	3006-400-523	Latch/Shaft Retainer	1
AE	3006-400-524	Pivot Retainer Sleeve	2
AF	3006-400-525	Bypass Arm	1
AG	3006-400-528	Machined Siderail Carrier	1
AH	3006-400-530	Timing Link Weldment	1
AJ	3006-400-656	Warning Label	1
AK	3006-400-206	Head End Right Siderail Label	1
AL	3006-400-207	Head End and Foot End Right Blank Label	1
AM	3006-400-522	Siderail Fastener Cover Label	7
AN	3006-700-208	Cable Restraint Label	1
AP	3006-400-532	Bearing	2
AR	3006-400-533	Release Handle Accent Panel	1
AT	3006-400-536	Latch Plate	1
AU	3006-400-541	Latch Disk	1
AV	3006-400-544	Glide Rod	2
AW	3006-400-540	Gas Spring Mounting Bracket	1
AY	3006-400-549	Latch Return Spring	4
BA	3006-400-551	Spring Plunger	2
BB	3006-400-552	Spring Arm, A	1
BC	3006-400-553	Spring Arm, B	1
BD	3006-400-554	Spring Arm Stop	1
BE	3006-400-557	Spring Arm Cap	2
BF	3006-400-560	Gas Spring	1
BG	3006-400-561	Spring Plunger Clip	2
BH	3006-100-570	Release Handle Assembly	1
BJ	3006-400-566	Handle Retainer Plate	1
BK	3006-400-567	Extension Spring	1
BL	3006-400-568	Bearing	4
BM	3006-400-569	Glide Rod Restraint	2
BN	3006-400-498	Mounting Bracket	1
BP	3006-400-573	Short Latch/Shaft Retainer	1
BR	3006-400-575	Arm Weldment	1
BT	3006-400-581	Machined Support Plate	1
BU	3006-400-584	Speed Nut	4
BV	3006-400-628	Inner Arm Cover	2
BW	3006-400-629	Outer Arm Cover	2
BY	3006-400-803	Main-to-Outside Siderail Cable, RH	1
CA	3006-400-862	Siderail Cable	1
CC	3000-300-478	CPR Conduit Clamp	1
CD	3000-300-114	4” Cable Tie	5

Return To Table of Contents

Head End Siderail Assembly with Optional Cardiac Chair

For Reference Only: 3006-999-030

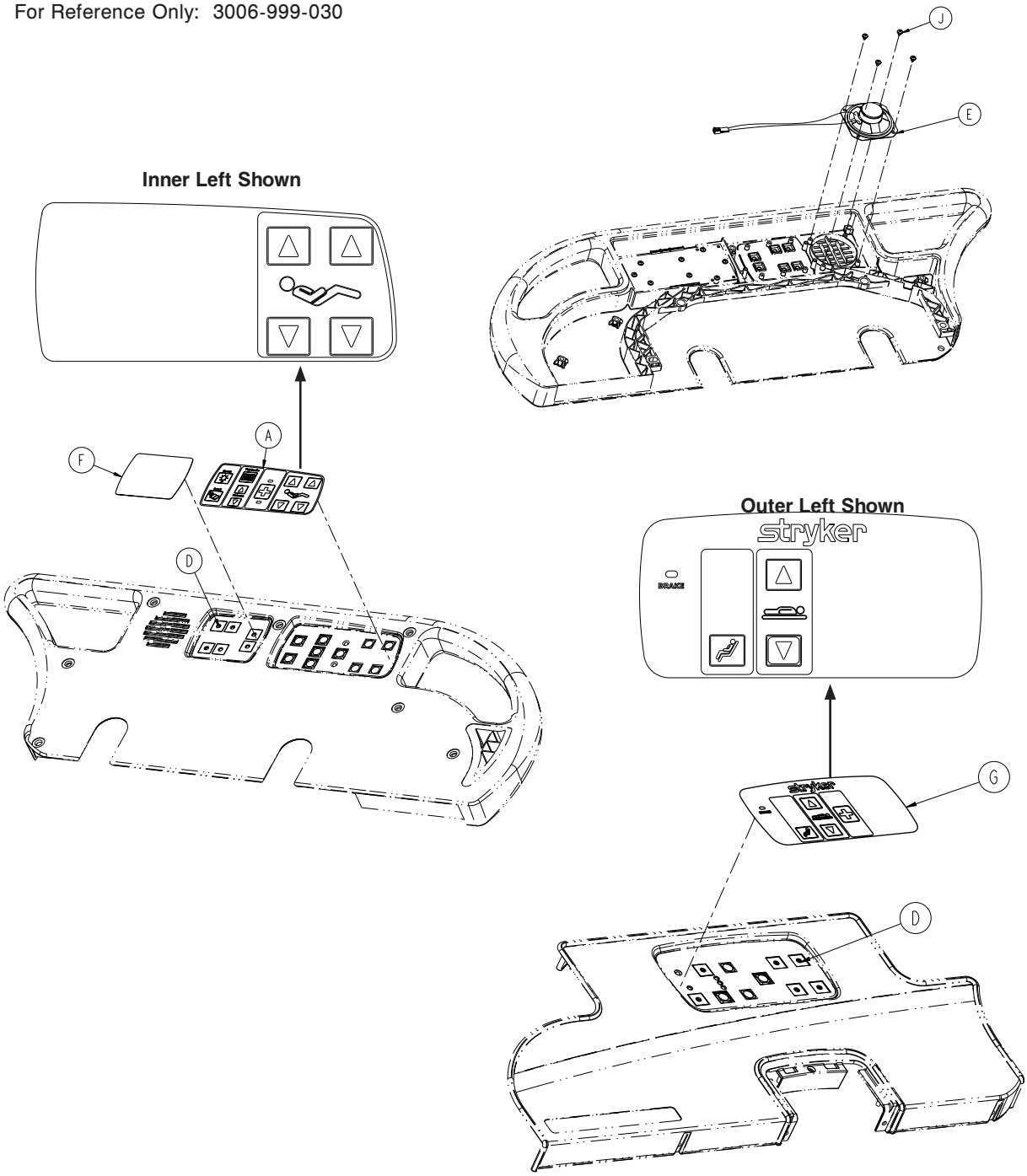

Item	Part No.	Part Name	Qty.
A	3006-400-620	Label Inner, Left, N/C, TV, Light, CC	1
B	3006-400-610	Label Inner, Right, N/C, TV, Light, CC (not shown)	1
D	3001-400-522	Filler Cap	30
E	3006-403-517	Speaker Seal	2
F	3006-430-133	Label, Smart TV Blank	2
G	3006-400-637	Label Outer, Left, N/C, CC	1
H	3006-400-647	Label Outer, Right, N/C, CC (not shown)	1
J	0023-112-000	Pan Head Tapping Screw	8

Return To Table of Contents

Head End Siderail Assembly with Optional Gatch/Fowler and Cardiac Chair

For Reference Only: 3006-999-031

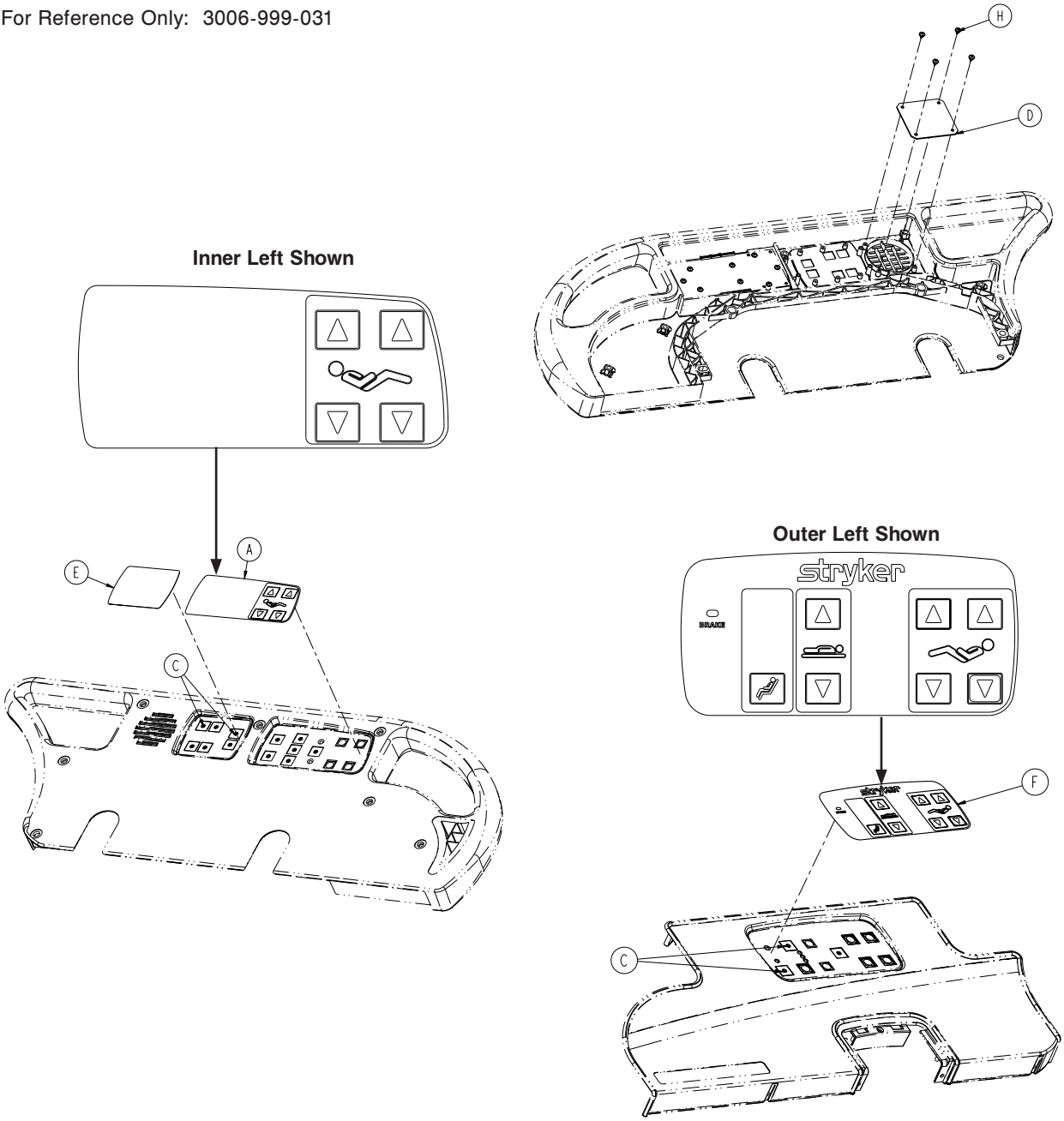

Item	Part No.	Part Name	Qty.
A	3006-400-620	Label Inner, Left, Standard	1
B	3006-400-610	Label Inner, Right, Standard (not shown)	1
D	3001-400-522	Filler Cap	26
E	3006-403-831	Speaker Seal	2
F	3006-430-133	Label, Smart TV Blank	2
G	3006-400-634	Label Outer, Left, G/F, CC	1
H	3006-400-644	Label Outer, Right, G/F, CC (not shown)	1
J	0023-112-000	Pan Head Tapping Screw	8

Return To Table of Contents

Head End Siderail Assembly with Optional Nurse Call, Cardiac Chair and Gatch/Fowler

For Reference Only: 3006-999-016

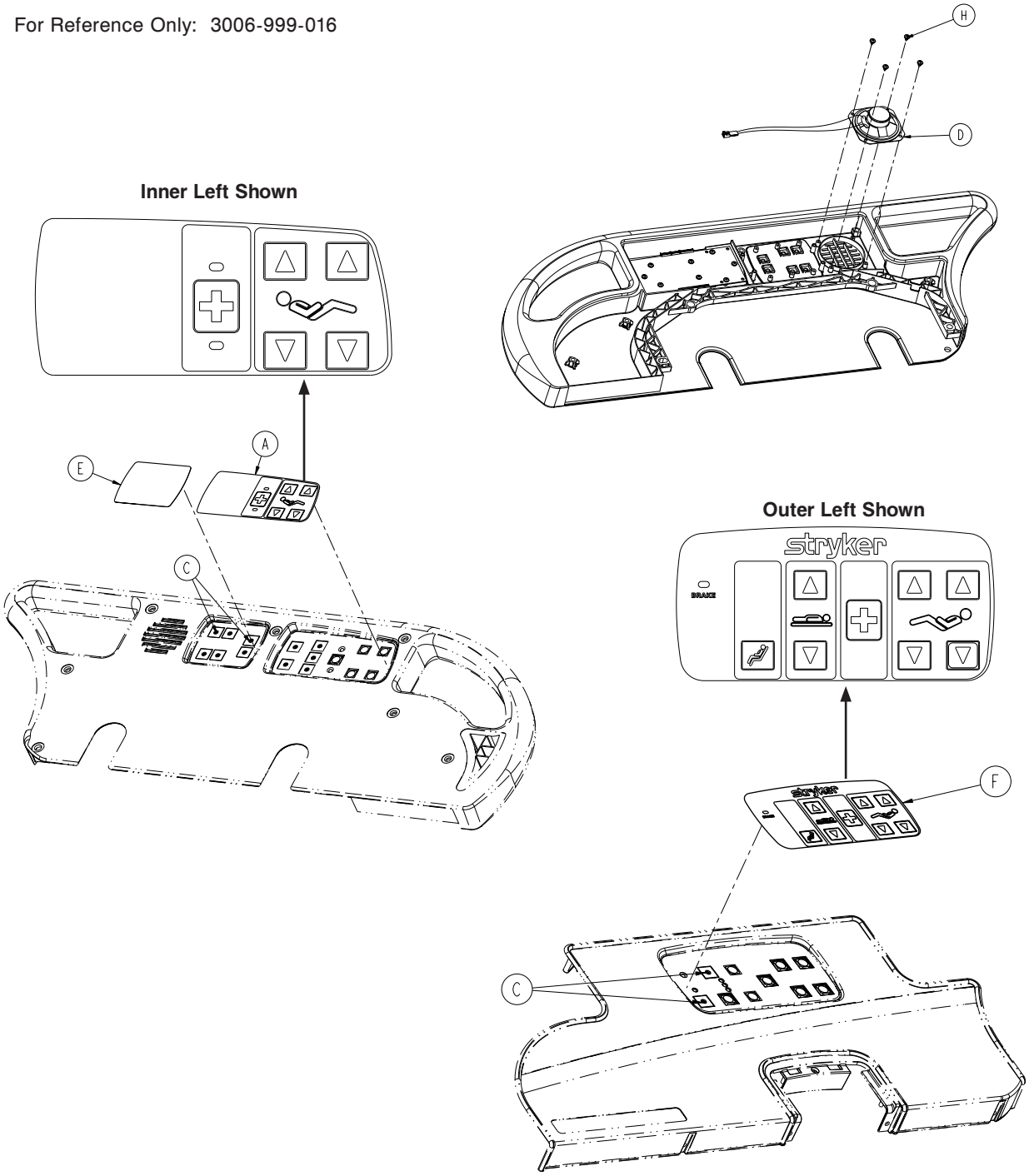

Item	Part No.	Part Name	Qty.
A	3006-400-621	Label Inner, Left, N/C	1
B	3006-400-611	Label Inner, Right, N/C (not shown)	1
D	3001-400-522	Filler Cap	18
E	3006-403-831	Speaker with Cable	2
F	3006-430-133	Label, Smart TV Blank	2
G	3006-400-633	Label Outer, Left, N/C, G/F, CC	1
H	3006-400-643	Label Outer, Right, N/C, G/F, CC (not shown)	1
J	0023-112-000	Pan Head Tapping Screw	8

Return To Table of Contents

Head End Siderail Assembly with Optional

Nurse Call, Lights, Cardiac Chair and Gatch/Fowler

For Reference Only: 3006-999-013

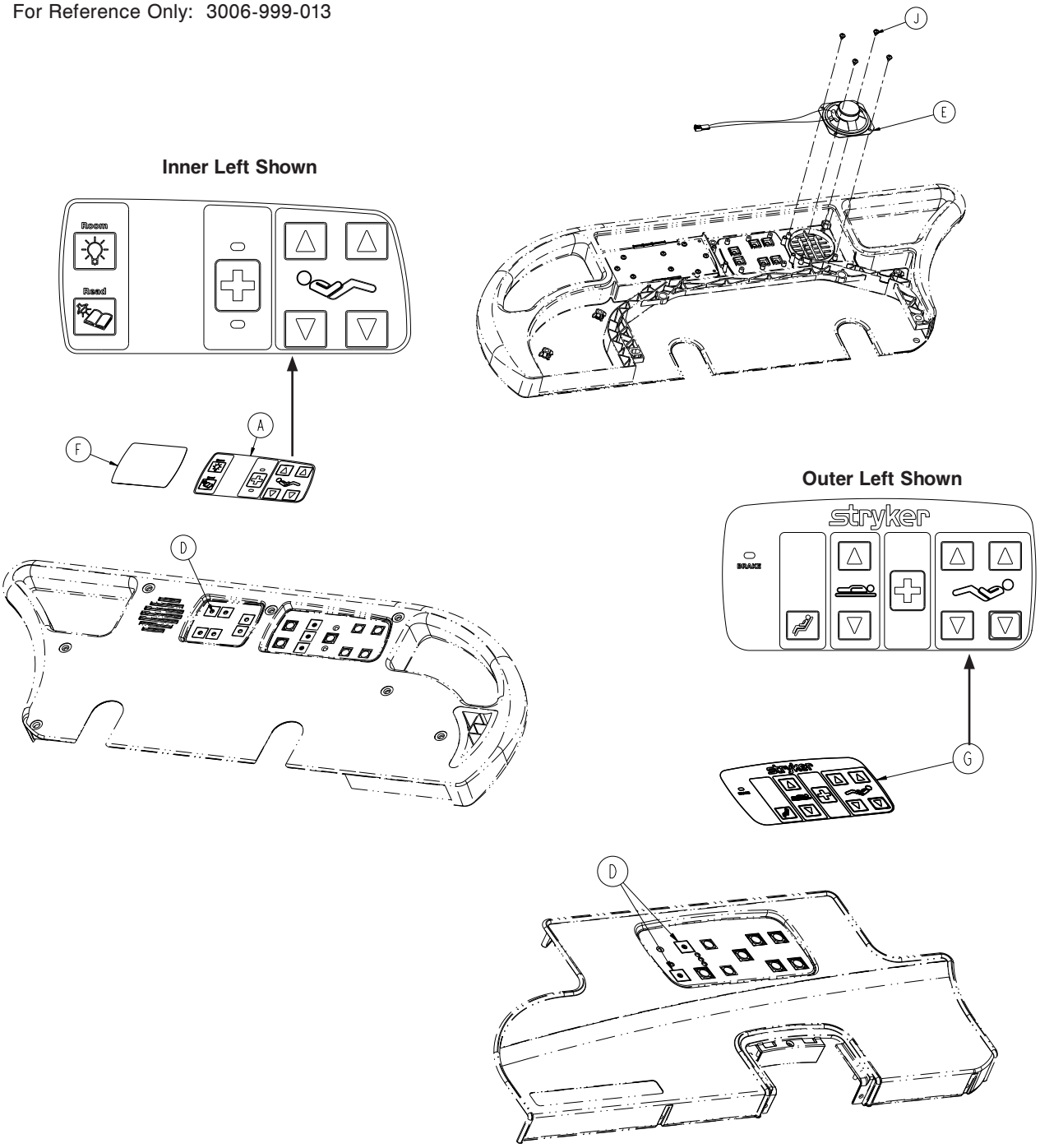

Item	Part No.	Part Name	Qty.
A	3006-400-625	Label Inner, Left, N/C, Light, CC	1
B	3006-400-615	Label Inner, Right, N/C, Light, CC (not shown)	1
D	3001-400-522	Filler Cap	14
E	3006-403-831	Speaker with Cable	2
F	3006-430-133	Label, Smart TV Blank	2
G	3006-400-633	Label Outer, Left, N/C, G/F, CC	1
H	3006-400-643	Label Outer, Right, N/C, G/F, CC (not shown)	1
J	0023-112-000	Pan Head Tapping Screw	8

Return To Table of Contents

Head End Siderail Assembly with Optional Nurse Call, Lights and Cardiac Chair

For Reference Only: 3006-999-005

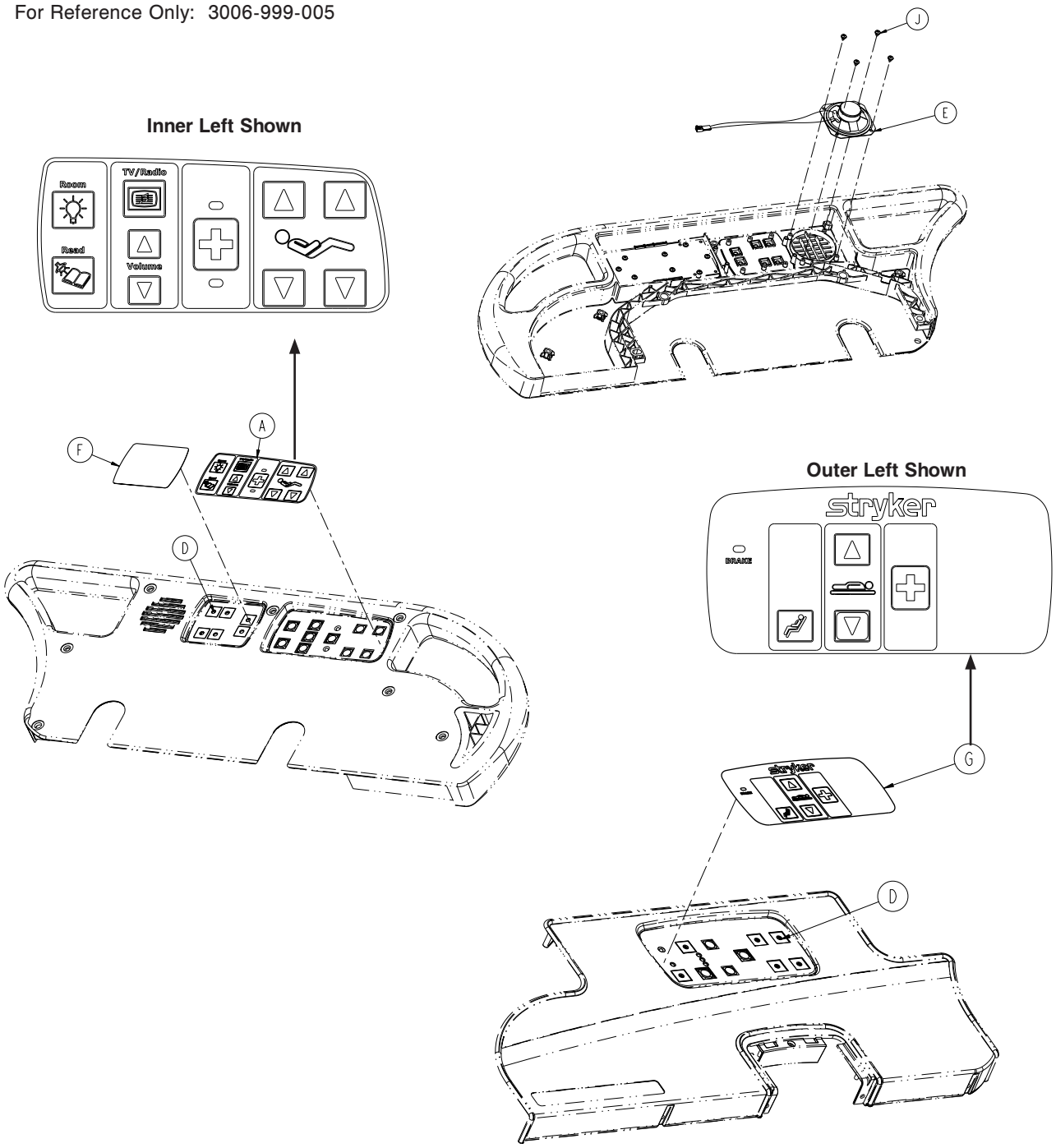

Item	Part No.	Part Name	Qty.
A	3006-400-623	Label Inner, Left, N/C, TV, Light, CC	1
B	3006-400-613	Label Inner, Right, N/C, TV, Light, CC (not shown)	1
D	3001-400-522	Filler Cap	16
E	3006-403-831	Speaker with Cable	2
F	3006-430-133	Label, Smart TV Blank	2
G	3006-400-635	Label Outer, Left, N/C, CC	1
H	3006-400-645	Label Outer, Right, N/C, CC (not shown)	1
J	0023-112-000	Pan Head Tapping Screw	8

Return To Table of Contents

Head End Siderail Assembly with Optional Nurse Call, TV/Radio, Lights and Cardiac Chair

For Reference Only: 3006-999-006

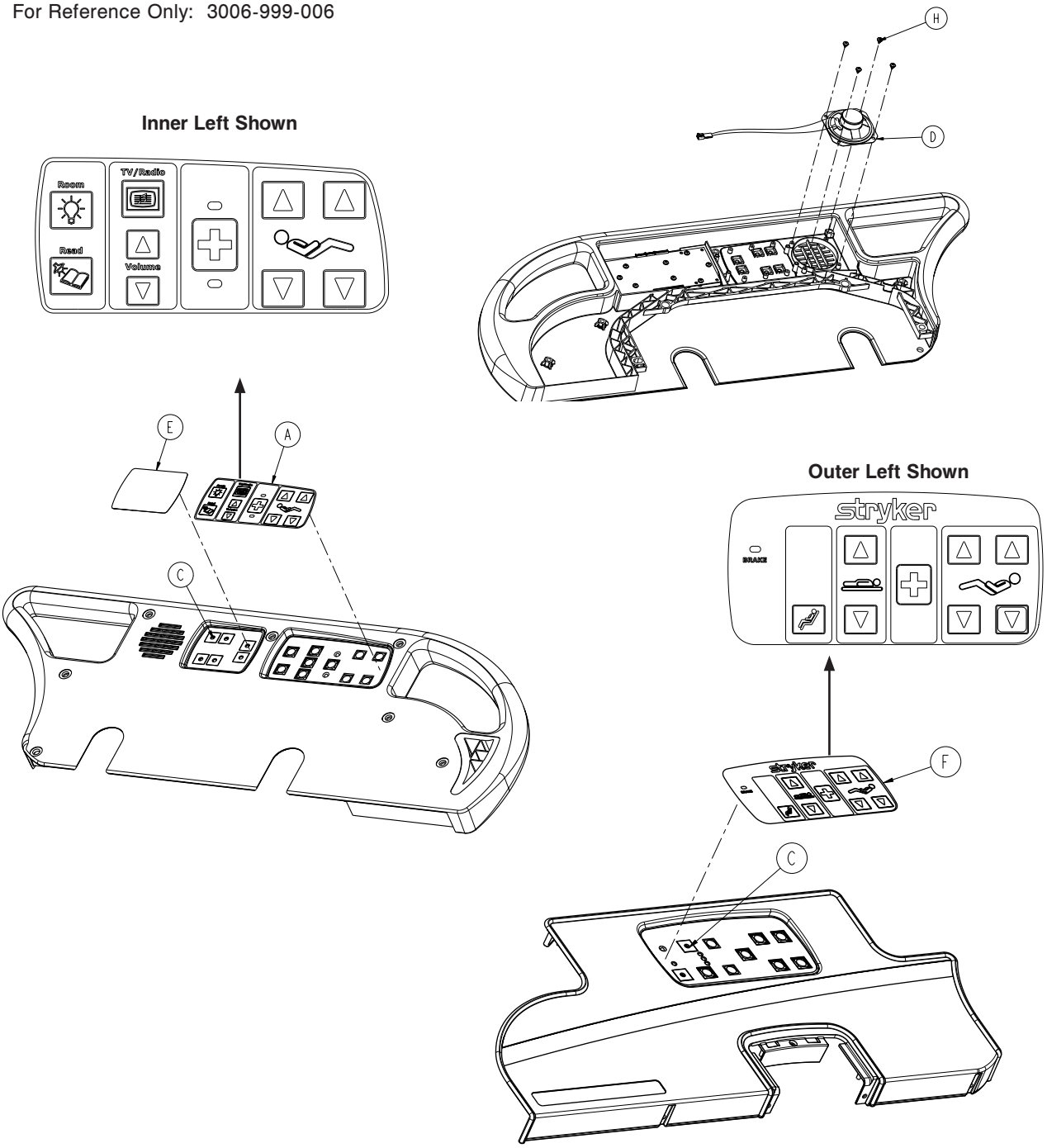

Item	Part No.	Part Name	Qty.
A	3006-400-623	Label Inner, Left, N/C, TV, Light, CC	1
B	3006-400-613	Label Inner, Right, N/C, TV, Light, CC (not shown)	1
D	3001-400-522	Filler Cap	8
E	3006-403-831	Speaker with Cable	2
F	3006-430-133	Label, Smart TV Blank	2
G	3006-400-633	Label Outer, Left, N/C, G/F, CC	1
H	3006-400-643	Label Outer, Right, N/C, G/F, CC (not shown)	1
J	0023-112-000	Pan Head Tapping Screw	8

Return To Table of Contents

Notes

Return To Table of Contents

Head End Siderail Assembly with Optional Nurse Call, Lights, Cardiac Chair and Smart TV

For Reference Only: 3006-999-403

Inner Left Shown

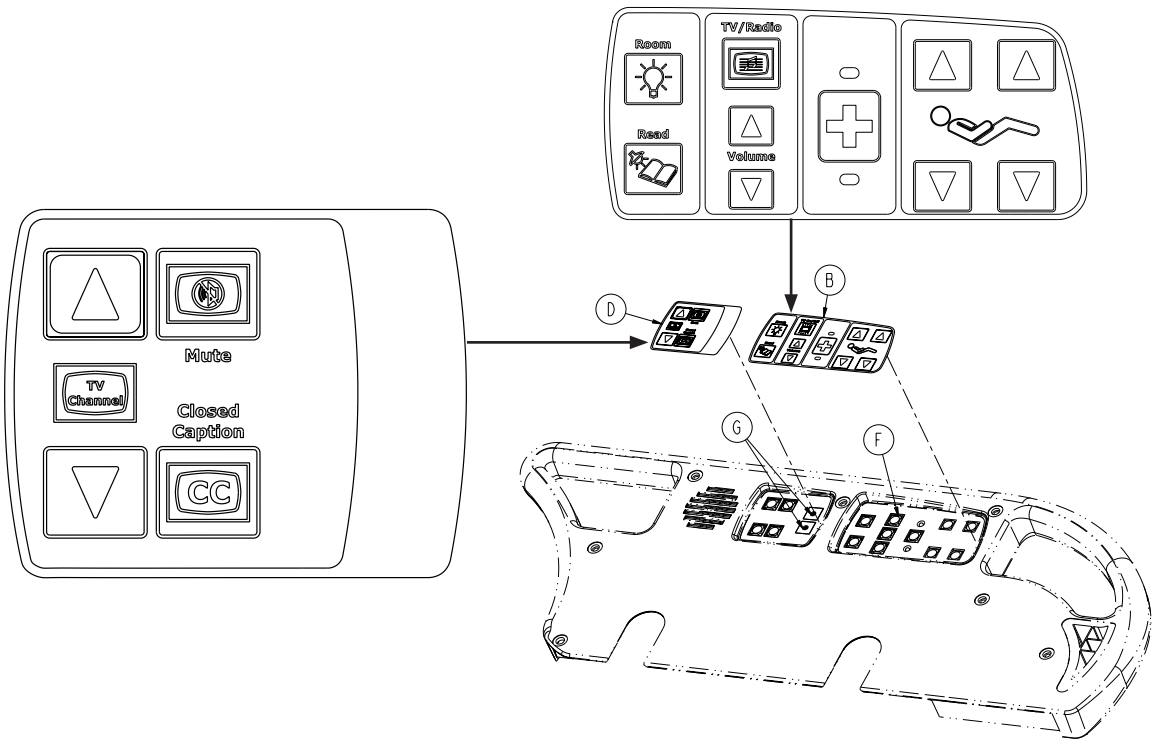

Outer Left Shown

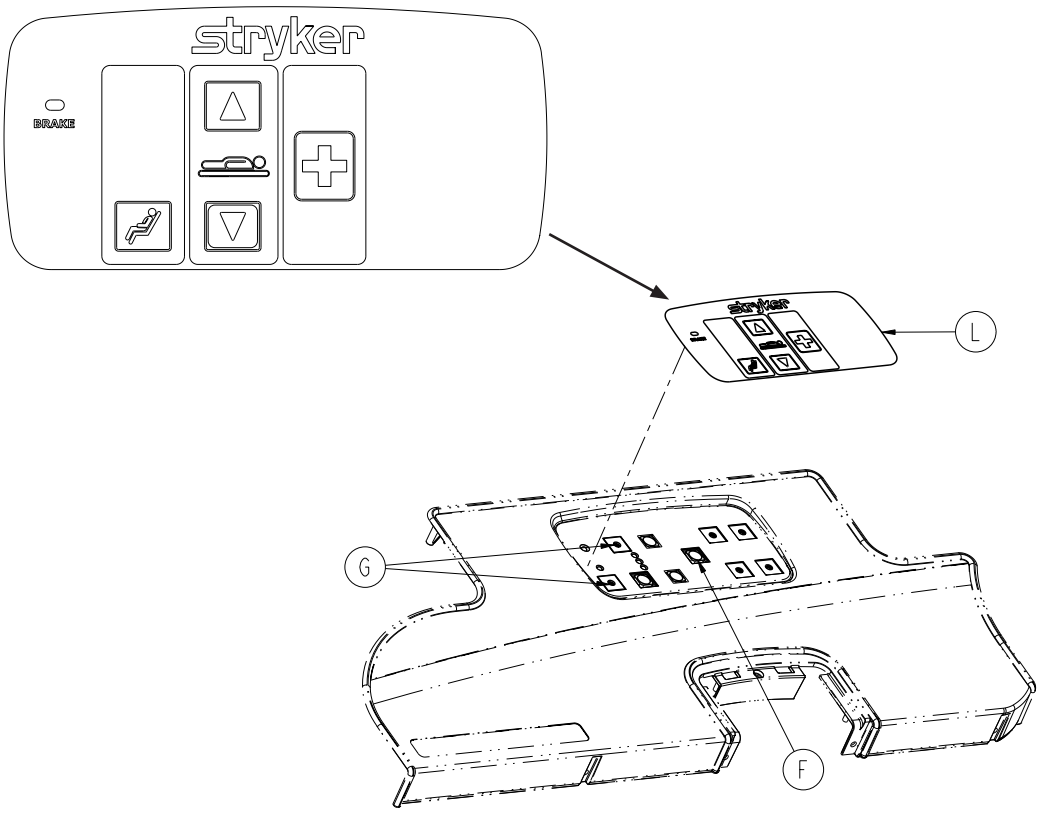

Return To Table of Contents

Head End Siderail Assembly with Optional Nurse Call, Lights, Cardiac Chair and Smart TV

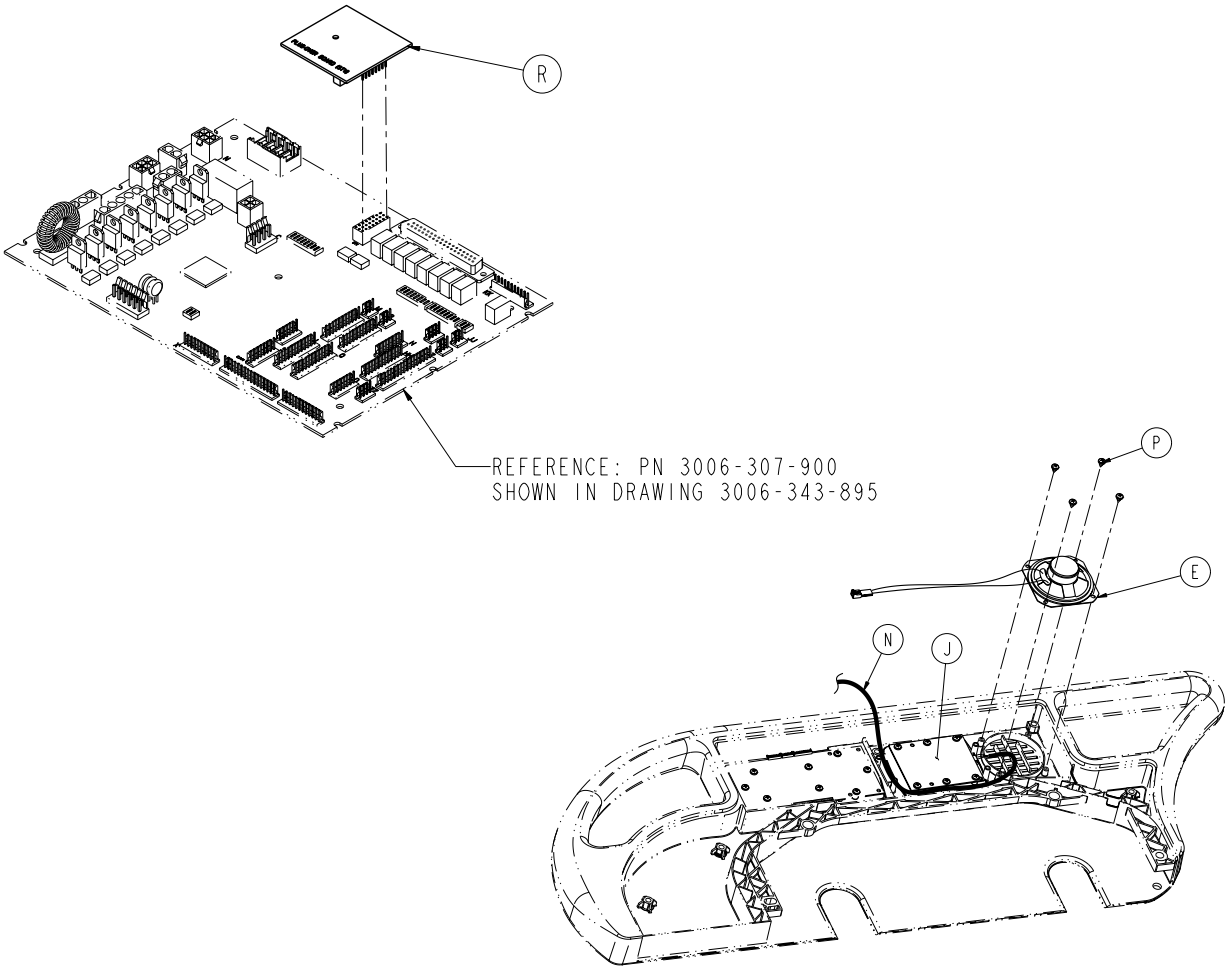

Head End Siderail Assembly with Optional NC, Lights, CC and Smart TV - 3006-999-403 (reference only)

Item	Part No.	Part Name	Qty.
A	3000-300-114	4” Cable Tie (not shown)	6
B	3006-430-623	Label Inner, Left, NC, Light, Smart TV	1
C	3006-430-613	Label Inner, Right, NC, Lights, Smart TV (not shown)	1
D	3006-430-131	Label, Left, CC, Smart TV	1
E	3006-403-831	Speaker with Cable	2
F	3001-400-953	Switch Cap	8
G	3001-400-522	Filler Cap	8
H	3006-430-132	Label, Right, CC, Smart TV (not shown)	1
J	5000-400-930	Siderail Lumbar Board, Left	1
K	5000-400-920	Siderail Lumbar Board, Right (not shown)	1
L	3006-400-635	Label Outer, Left, NC, CC	1
M	3006-400-645	Label Outer, Right, NC, CC (not shown)	1
N	3006-402-803	PCB Siderail Cable	2
P	0023-112-000	Pan Head Tapping Screw	20
R	3003-039-800	Smart TV Auto Detect PCB Assembly	1

Return To Table of Contents

Head End Siderail Assembly with Optional

NC, Lights, Gatch/Fowler, Cardiac Chair and Smart TV

For Reference Only: 3006-999-405

Inner Left Shown

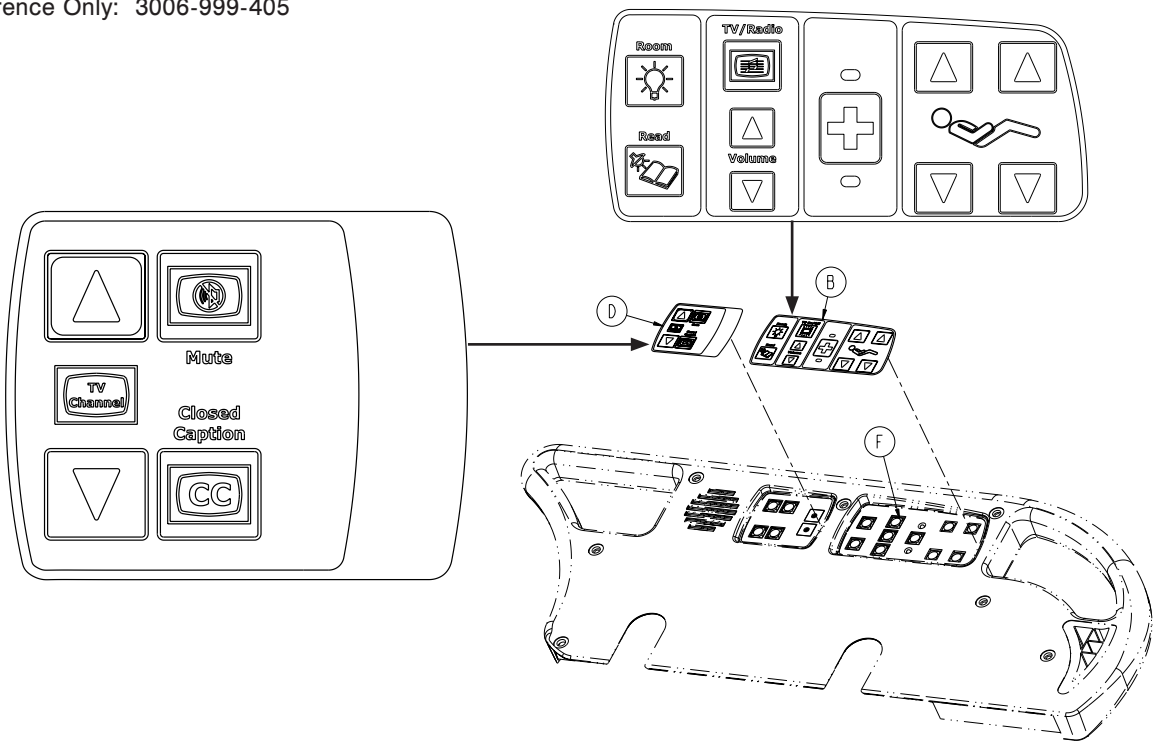

Outer Left Shown

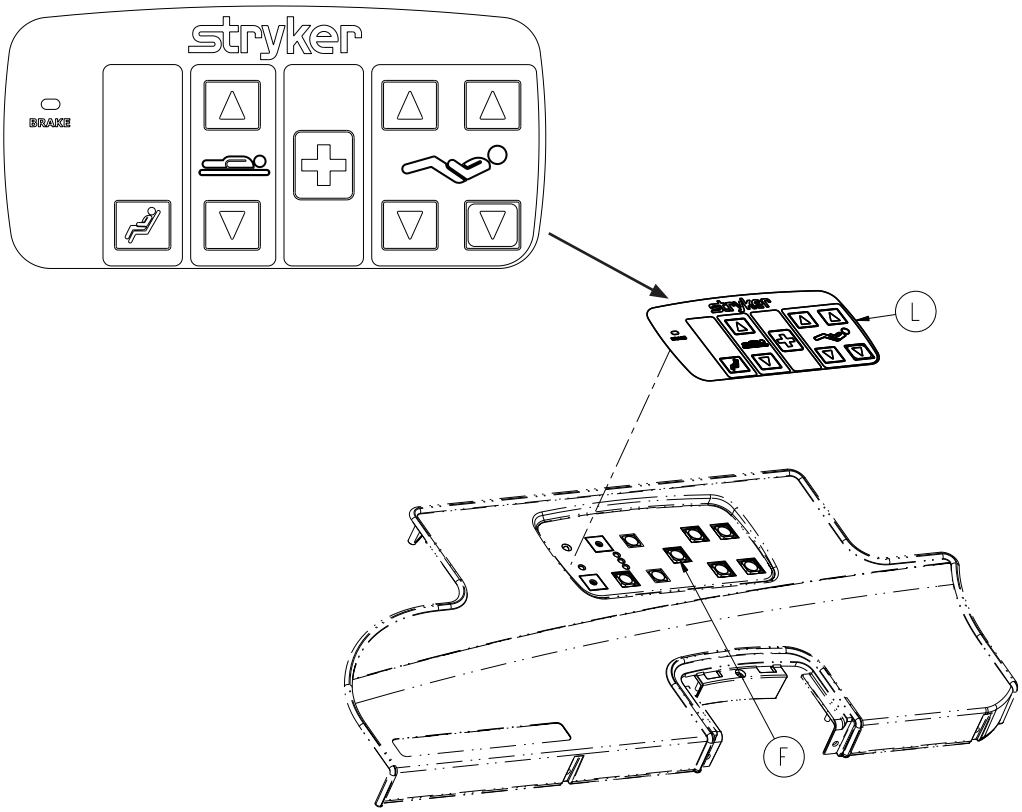

Return To Table of Contents

Head End Siderail Assembly with Optional NC, Lights, Gatch/Fowler, Cardiac Chair and Smart TV

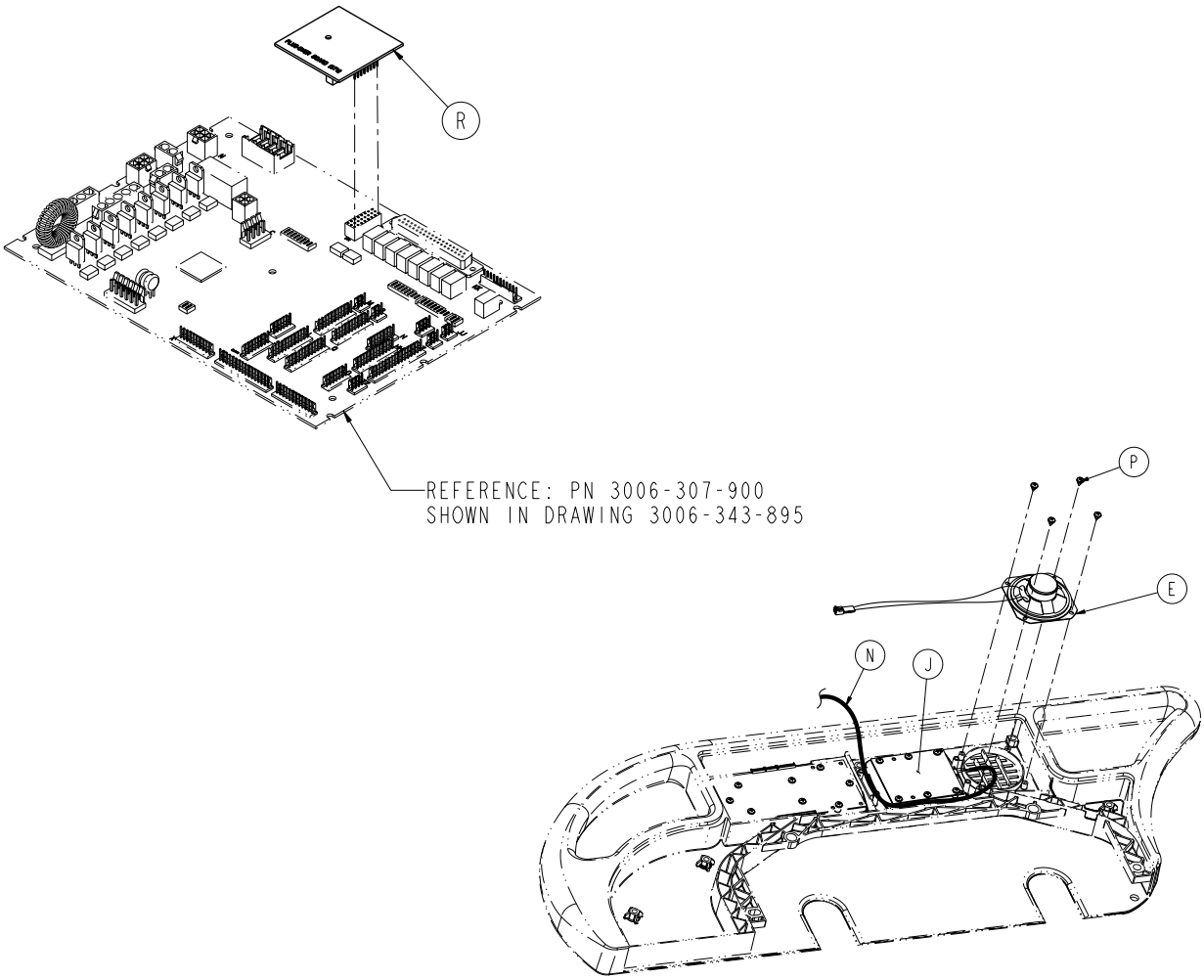

Head End Siderail Assembly with Optional NC, Lights, G/F, CC and Smart TV - 3006-999-405 (reference only)

Item	Part No.	Part Name	Qty.
A	3000-300-114	4” Cable Tie (not shown)	6
B	3006-430-623	Label Inner, Left, NC, Light, Smart TV	1
C	3006-430-613	Label Inner, Right, NC, Lights, Smart TV (not shown)	1
D	3006-430-131	Label, Left, CC, Smart TV	1
E	3006-403-831	Speaker with Cable	2
F	3001-400-953	Switch Cap	8
H	3006-430-132	Label, Right, CC, Smart TV (not shown)	1
J	5000-400-930	Siderail Lumbar Board, Left	1
K	5000-400-920	Siderail Lumbar Board, Right (not shown)	1
L	3006-400-633	Label Outer, Left, NC, G/F, DMS	1
M	3006-400-643	Label Outer, Right, NC, G/F, DMS (not shown)	1
N	3006-402-803	PCB Siderail Cable	2
P	0023-112-000	Pan Head Tapping Screw	20
R	3003-039-800	Smart TV Auto Detect PCB Assembly	1

Return To Table of Contents

Head End Siderail Assembly, Outer Panel

For Reference Only
3006-400-125 (LEFT)
3006-400-225 (RIGHT)

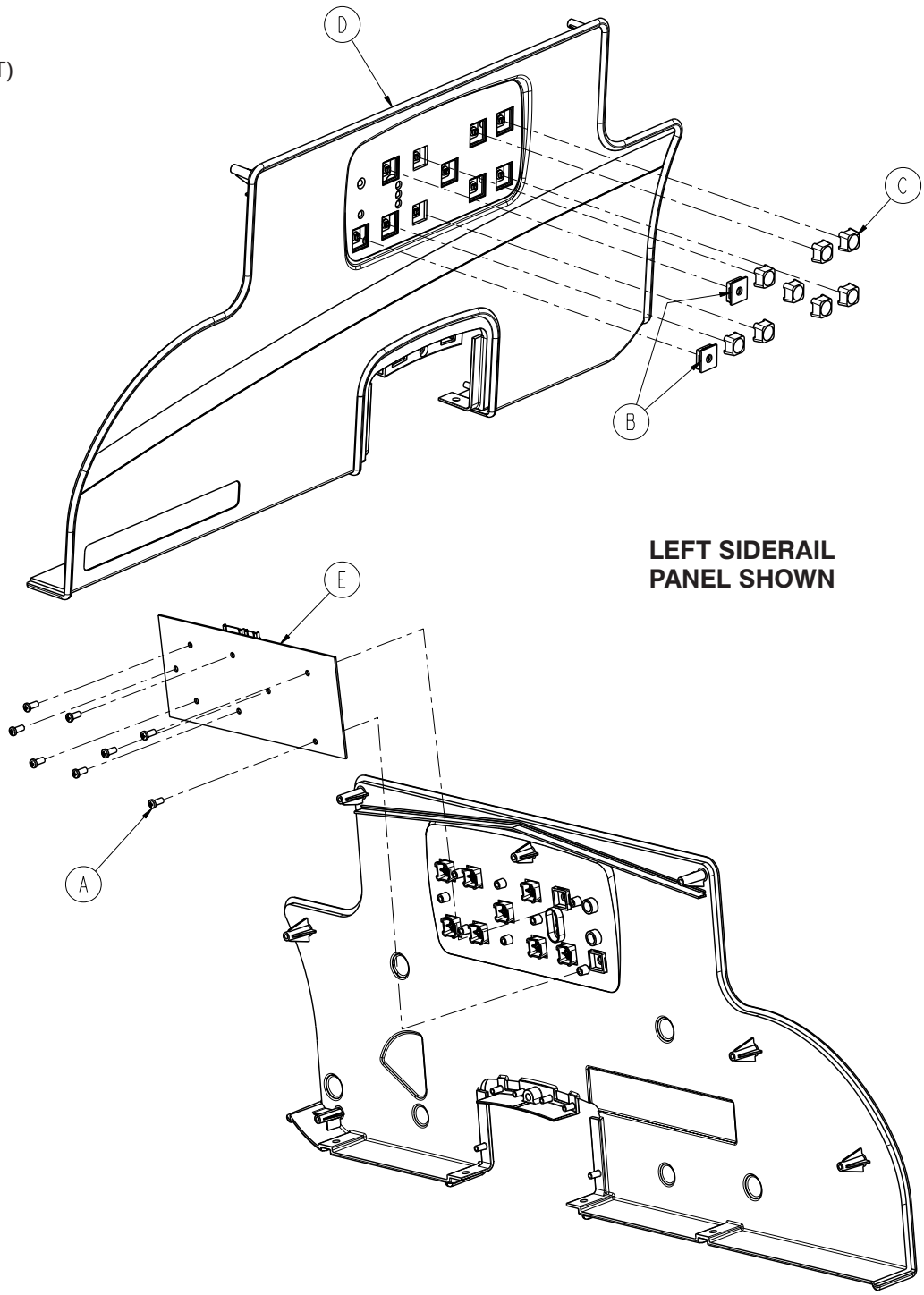

Item	Part No.	Part Name	Qty.
A	0023-112-000	Pan Head High/Low Tapping Screw	8
B	3001-400-522	Filler Cap	2
C	3001-400-953	Switch Cap	8
D	3006-400-127	Head End Siderail Cover, Left	1
	3006-400-227	Head End Siderail Cover, Right	1
E	3006-400-910	Outer Siderail	1

Return To Table of Contents

Head End Siderail Assembly, Inner Panel

For Reference Only
3006-400-130 (LEFT)
3006-400-230 (RIGHT)

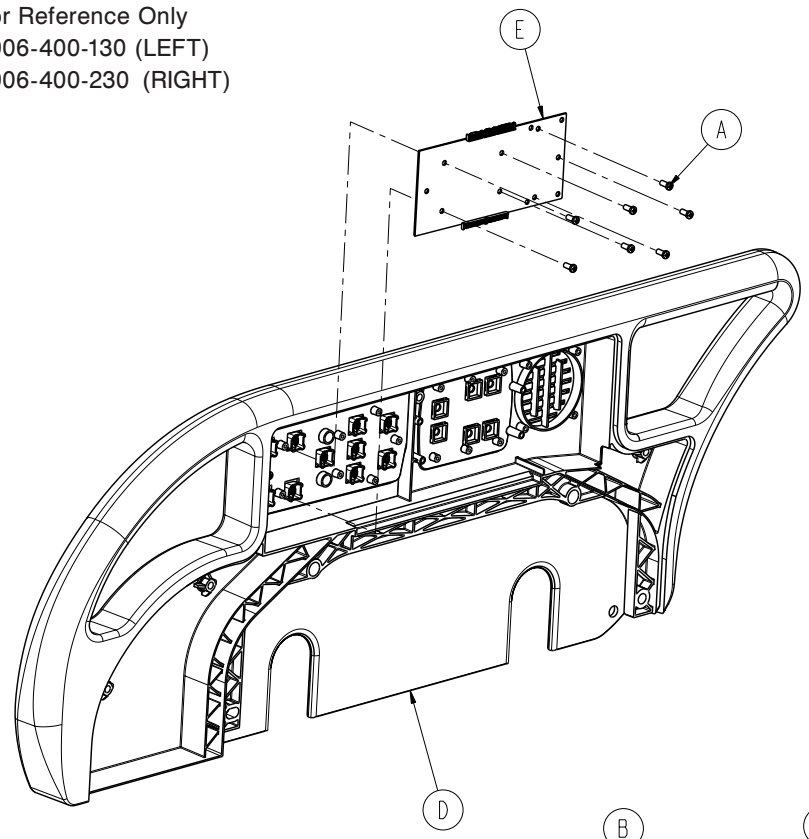

LEFT SIDERAIL PANEL SHOWN

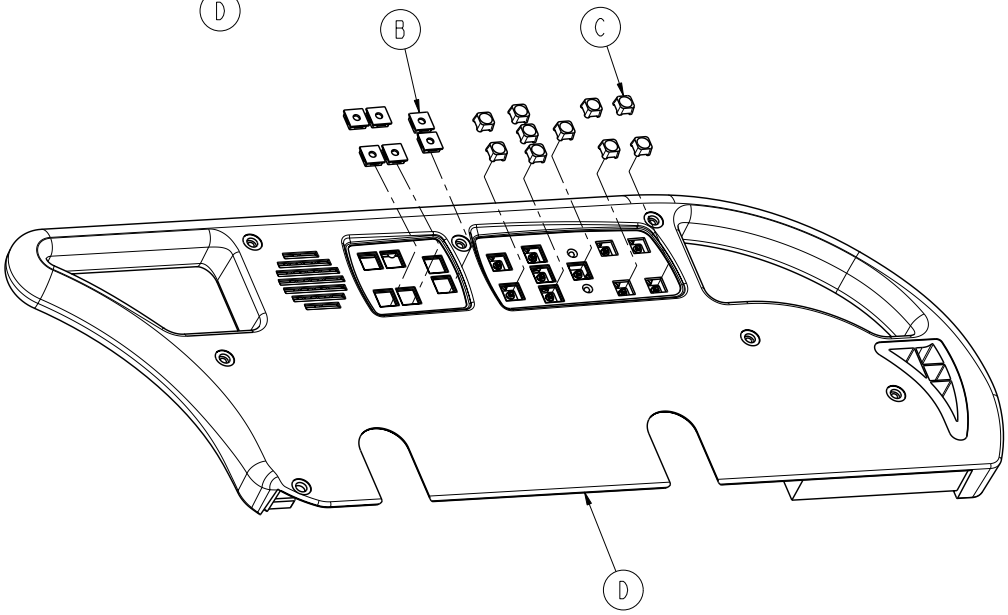

Item	Part No.	Part Name	Qty.
A	0023-112-000	Pan Head High/Low Tapping Screw	8
B	3001-400-522	Filler Cap	6
C	3001-400-953	Switch Cap	10
D	3006-400-115	Head End Toprail, Left	1
	3006-400-215	Head End Toprail, Right	1
E	3006-400-930	Main Siderail	1

Return To Table of Contents

Release Handle Assembly

For Reference Only: 3006-400-570

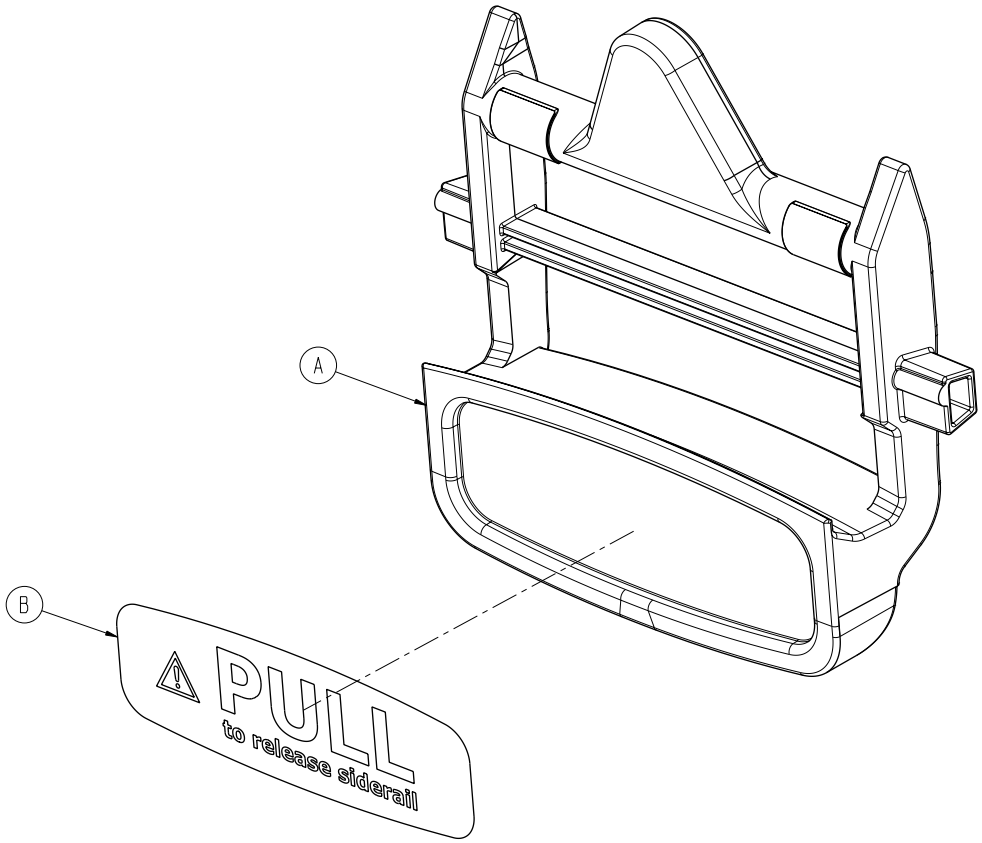

Item	Part No.	Part Name	Qty.
A	3006-400-565	Release Handle	1
B	3006-400-657	Siderail Release Label	1

Return To Table of Contents

Siderail Ass'y, *i*Bed® Awareness Option, HE, Left - 3006-400-100

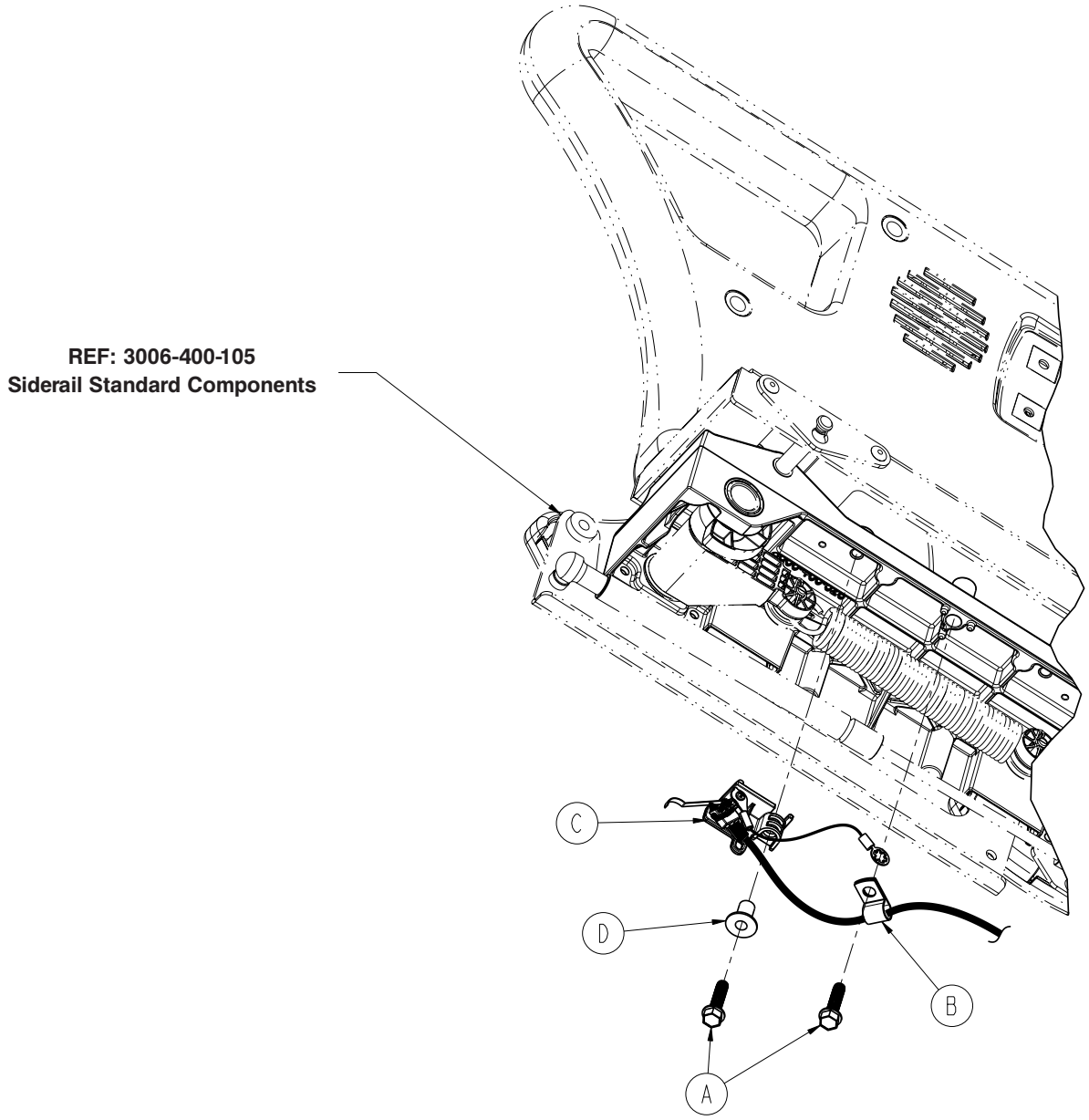

Item	Part No.	Part Name	Qty.
A	0023-123-000	Hex Washer Head Screw	2
B	0058-105-000	P-Clamp	1
C	3006-400-120	Siderail Switch Assembly, Head Left	1

Return To Table of Contents

Siderail Ass'y, *i*Bed® Awareness Option, HE, Right - 3006-400-200

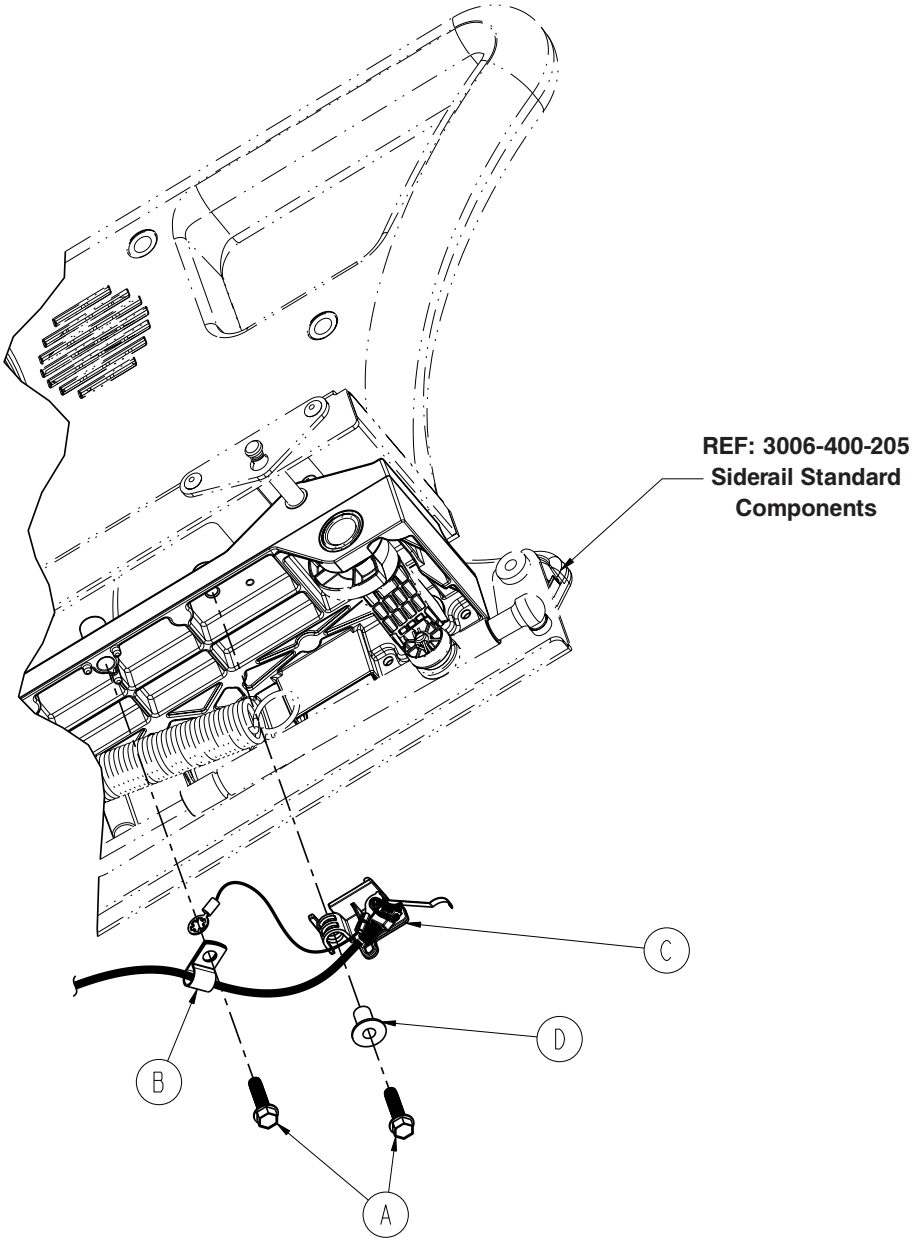

Item	Part No.	Part Name	Qty.
A	0023-123-000	Hex Washer Head Screw	2
B	0058-105-000	P-Clamp	1
C	3006-400-220	Siderail Switch Assembly, Head Right	1

Return To Table of Contents

Switch Assembly, *i*Bed® Awareness Option, Head End, 3006-400-120 (Left) / 3006-400-220 (Right)

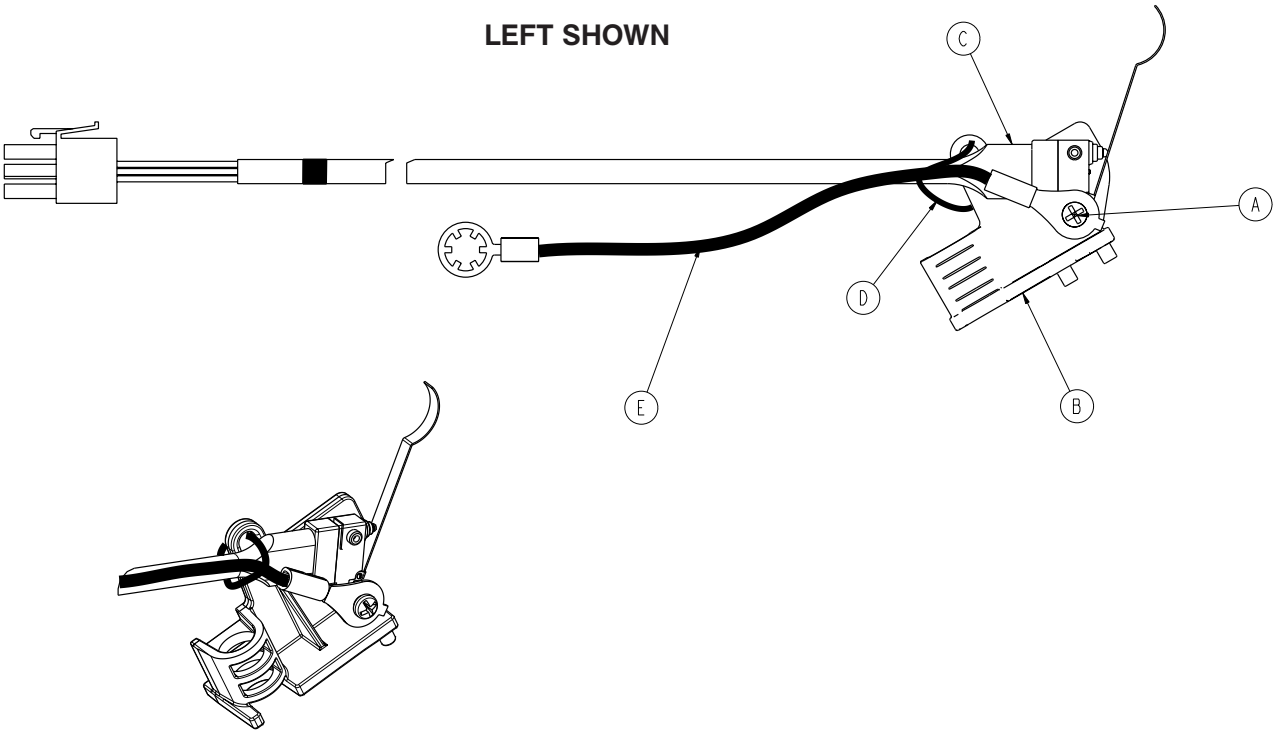

Head End Left - 3006-400-120 / Head End Right - 3006-400-220

Item	Part No.	Part Name	Qty.
A	0023-294-000	High-Low Tapping Screw	1
B	3006-400-558	Switch Holder, Left	1
	3006-400-559	Switch Holder, Right	1
D	3006-400-802	Head End Siderail Switch Cable	1

Return To Table of Contents

Foot End Siderail Assembly

For Reference Only:
3006-400-300 (LH)
3006-400-400 (RH)

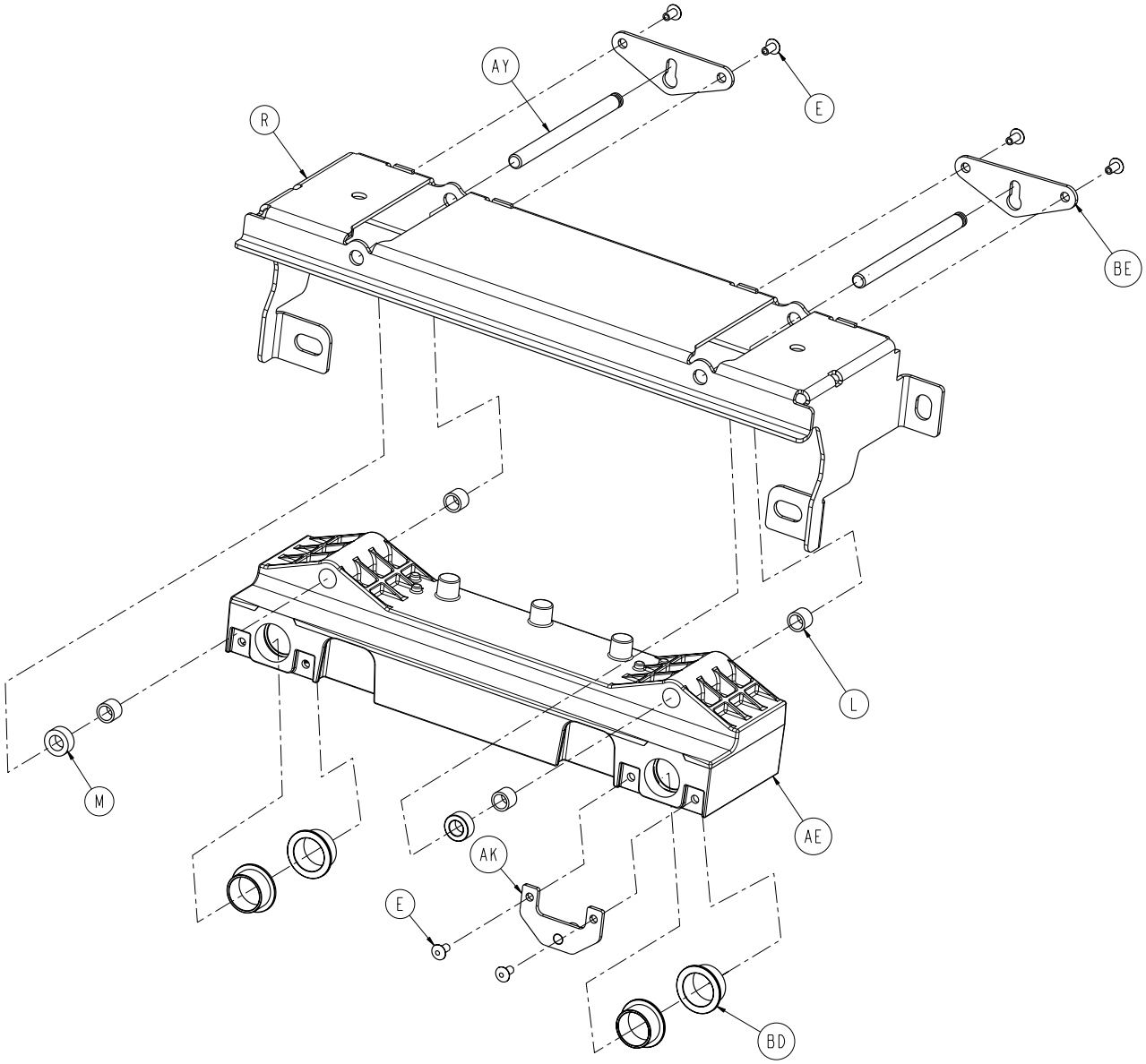

(LEFT SIDERAIL SHOWN)

Return To Table of Contents

Foot End Siderail Assembly

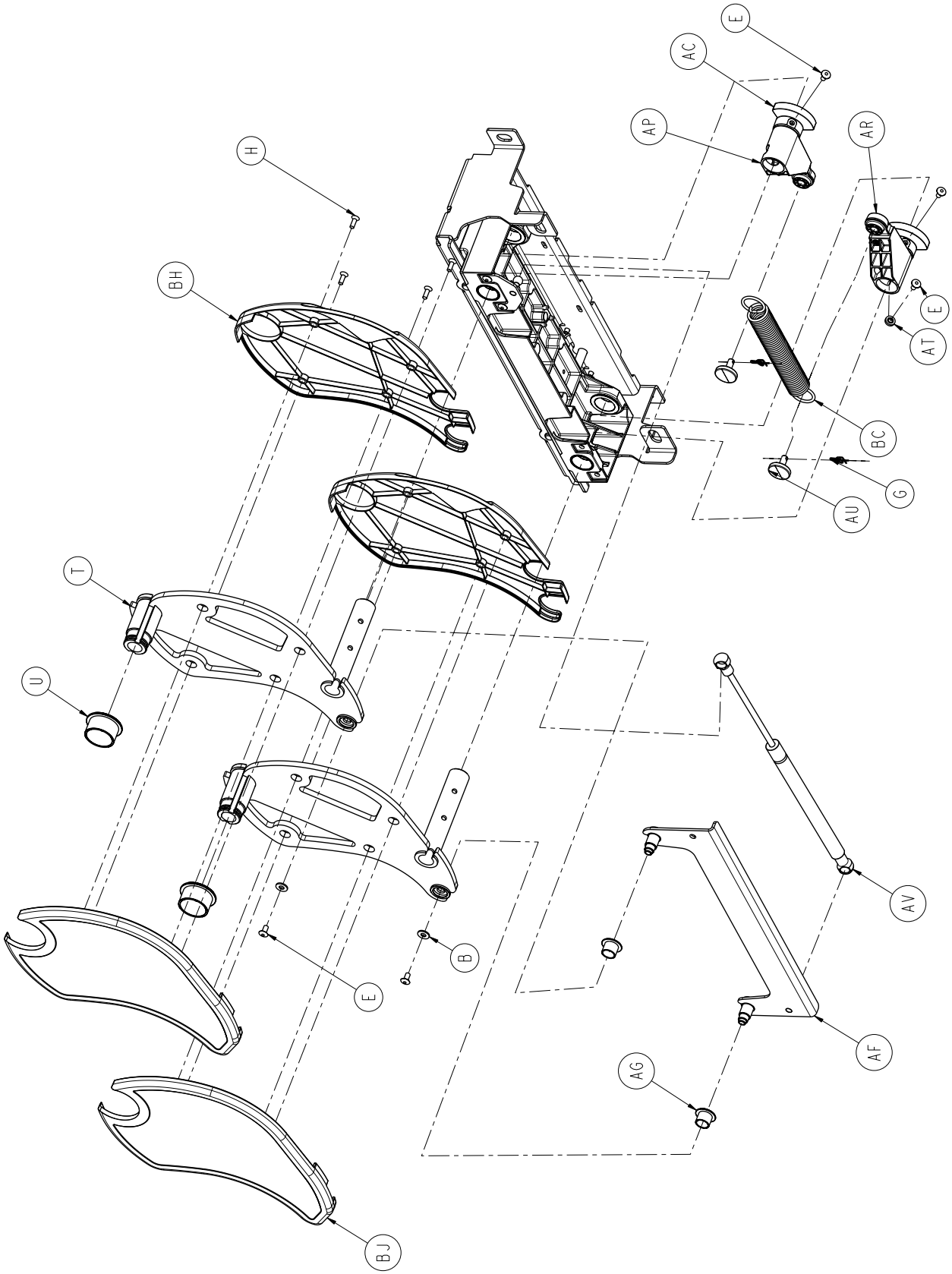

Return To Table of Contents

Foot End Siderail Assembly

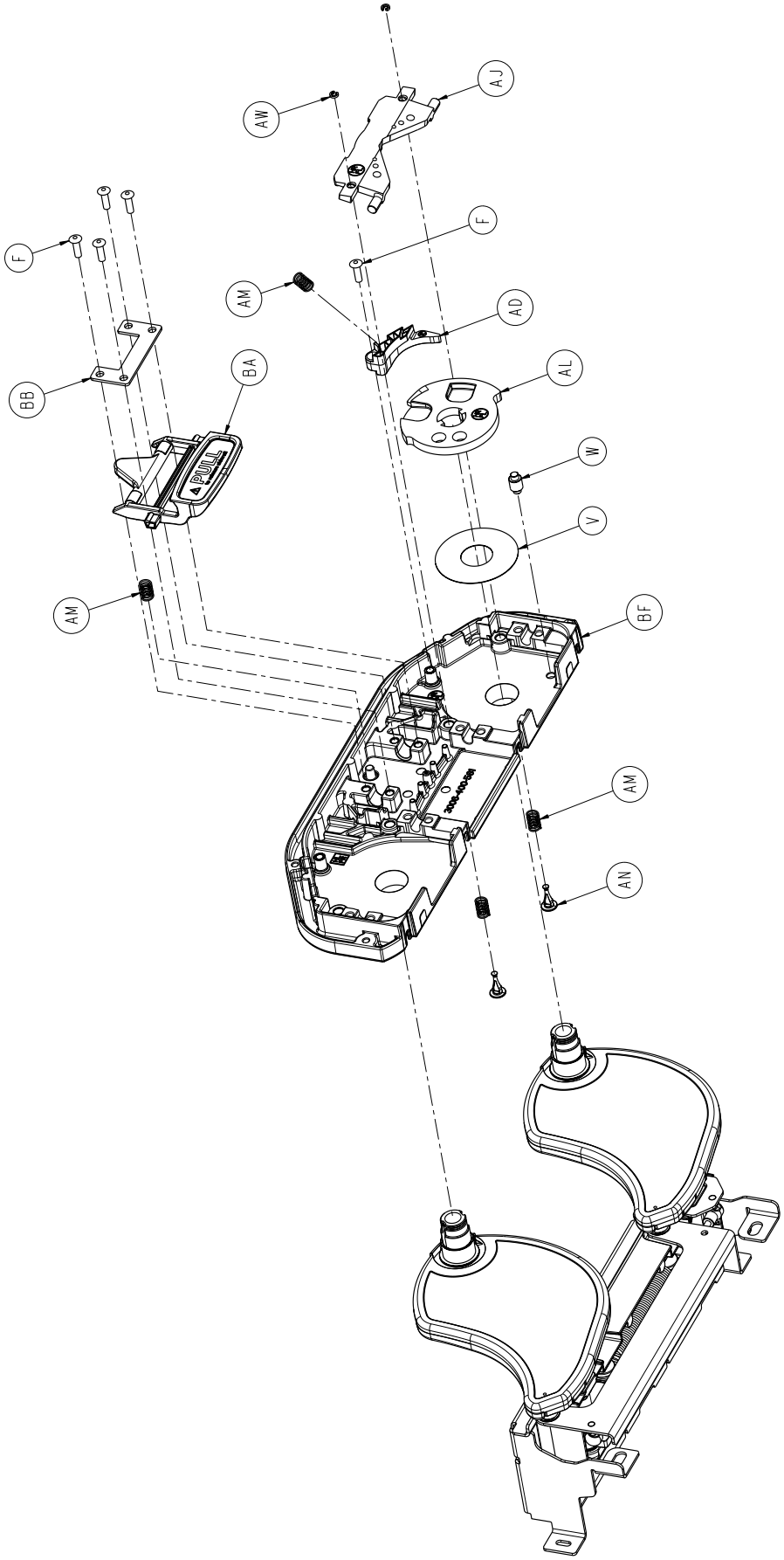

Return To Table of Contents

Foot End Siderail Assembly

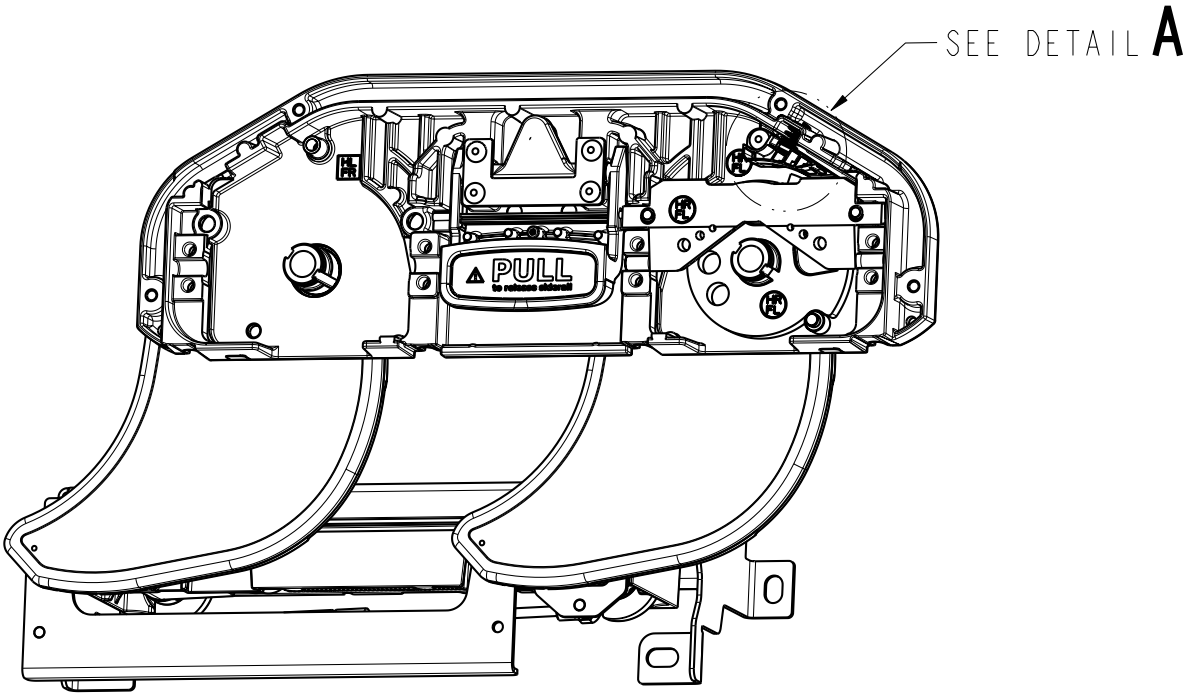

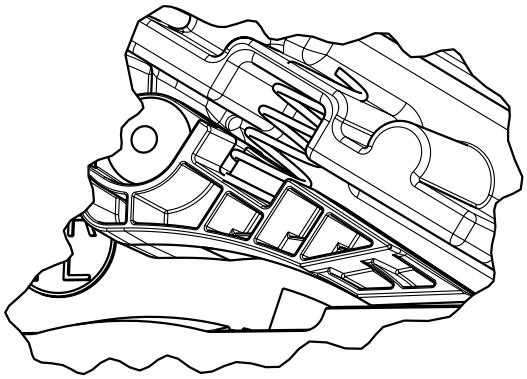

DETAIL A

Return To Table of Contents

Foot End Siderail Assembly

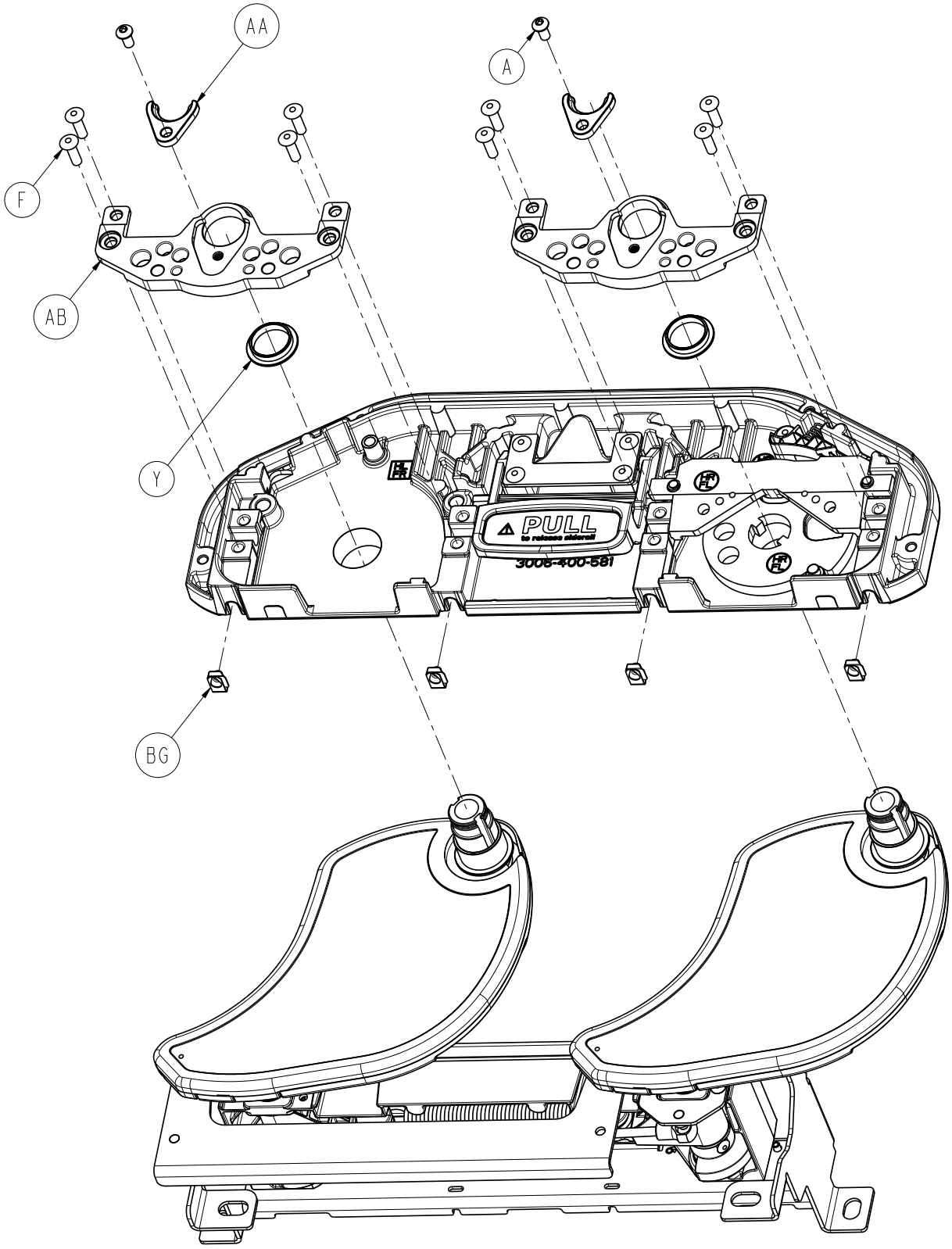

Return To Table of Contents

Foot End Siderail Assembly

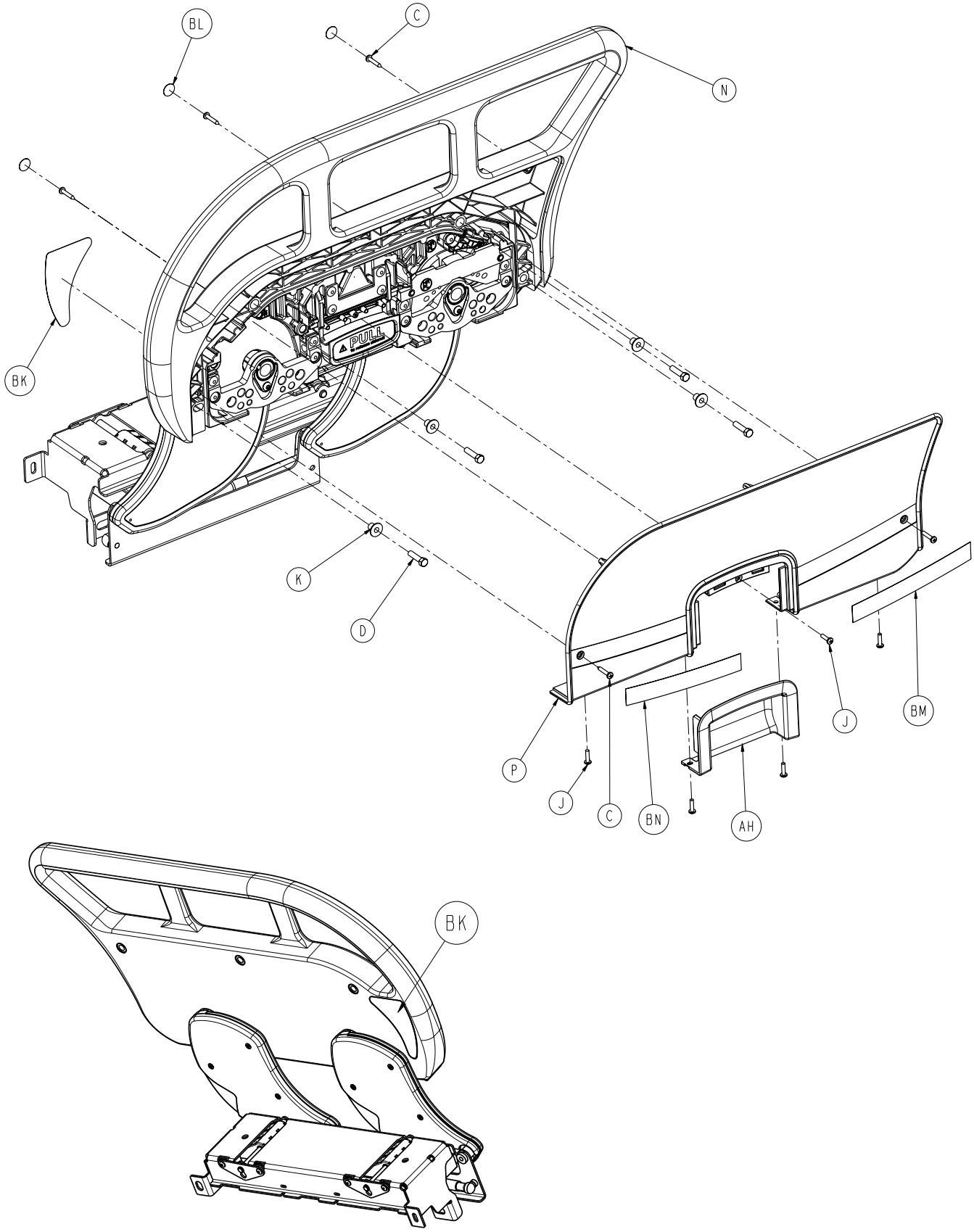

Return To Table of Contents

Foot End Siderail Assembly, Common Components - (Reference Only)

Left Standard Components - 3006-400-300

Item	Part No.	Part Name	Qty.
A	0004-589-000	Button Head Cap Screw	2
B	0011-302-000	Washer	2
C	0023-076-000	Pan Head Tapping Screw	5
D	0003-392-000	Hex Head Machine Screw	4
E	0025-079-000	Dome Head Rivet	11
F	0025-147-000	Pop Rivet	13
G	0027-020-000	Rue Ring Cotter	2
H	0001-072-000	Flat Head Machine Screw	8
J	0050-005-000	Pan Head Machine Screw	5
K	3006-400-574	Siderail Spacer	4
L	3000-400-574	Sleeve Bearing	4
M	3006-400-495	Siderail Spacer	2
N	3006-400-320	Foot End Toprail, Left	1
P	3006-400-327	Foot End Siderail Cover, Left	1
R	3006-400-499	Foot End Mounting Bracket	1
T	3006-400-510	Arm Weldment	2
U	3006-400-513	Bearing	2
V	3006-400-514	Pivot Washer	1
W	3006-400-516	Hard Stop Pin	1
Y	3006-400-517	Bearing	2
AA	3006-400-518	Pivot Retainer Clip	2
AB	3006-400-523	Latch/Shaft Retainer	2
AC	3006-400-524	Pivot Retainer Sleeve	2
AD	3006-400-525	Bypass Arm	1
AE	3006-400-528	Machined Siderail Carrier	1
AF	3006-400-530	Timing Link Weldment	1
AG	3006-400-532	Bearing	2
AH	3006-400-533	Release Handle Accent Panel	1
AJ	3006-400-536	Latch Plate	1
AK	3006-400-540	Gas Spring Mounting Bracket	1
AL	3006-400-541	Latch Disk	1
AM	3006-400-549	Latch Return Spring	4
AN	3006-400-551	Spring Plunger	2
AP	3006-400-552	Spring Arm, A	1
AR	3006-400-553	Spring Arm, B	1
AT	3006-400-551	Spring Arm Stop	1
AU	3006-400-557	Spring Arm Cap	2
AV	3006-400-560	Gas Spring	1
AW	3006-400-561	Spring Plunger Clip	2
AY	3006-400-564	Glide Rod	2
BA	3006-400-570	Release Handle Assembly	1
BB	3006-400-566	Handle Retainer Plate	1
BC	3006-400-567	Extension Spring	1
BD	3006-400-568	Bearing	4
BE	3006-400-569	Glide Rod Restraint	2
BF	3006-400-581	Machined Support Plate	1
BG	3006-400-584	Speed Nut	4
BH	3006-400-628	Inner Arm Cover	2
BJ	3006-400-629	Outer Arm Cover	2
BK	3006-400-107	Head End & Foot End Blank Siderail Label, Left	1
BL	3006-400-522	Siderail Fastener Cover Label	3
BM	3006-400-301	Foot Siderail Label	1
BN	3006-400-302	Foot LH Siderail Label	1

Return To Table of Contents

Foot End Siderail Assembly, Common Components - (Reference Only)

Right Standard Components - 3006-400-400

Item	Part No.	Part Name	Qty.
A	0004-589-000	Button Head Cap Screw	2
B	0011-302-000	Washer	2
C	0023-076-000	Pan Head Tapping Screw	5
D	0003-392-000	Hex Head Machine Screw	4
E	0025-079-000	Dome Head Rivet	11
F	0025-147-000	Pop Rivet	13
G	0027-020-000	Rue Ring Cotter	2
H	0001-072-000	Flat Head Machine Screw	8
J	0050-005-000	Pan Head Machine Screw	5
K	3006-400-574	Siderail Spacer	4
L	3000-400-557	Sleeve Bearing	4
M	3006-400-495	Siderail Spacer	2
N	3006-400-420	Toprail	1
P	3006-400-427	Siderail Cover	1
R	3006-400-499	Mounting Bracket	1
T	3006-400-515	Arm Weldment	2
U	3006-400-513	Bearing	2
V	3006-400-514	Pivot Washer	1
W	3006-400-516	Hard Stop Pin	1
Y	3006-400-517	Bearing	2
AA	3006-400-518	Pivot Retainer Clip	2
AB	3006-400-523	Latch/Shaft Retainer	2
AC	3006-400-524	Pivot Retainer Sleeve	2
AD	3006-400-505	Bypass Arm	1
AE	3006-400-528	Machined Siderail Carrier	1
AF	3006-400-535	Timing Link Weldment	1
AG	3006-400-532	Bearing	2
AH	3006-400-533	Release Handle Accent Panel	1
AJ	3006-400-534	Latch Plate	1
AK	3006-400-540	Gas Spring Mounting Bracket	1
AL	3006-400-537	Latch Disk	1
AM	3006-400-549	Latch Return Spring	4
AN	3006-400-551	Spring Plunger	2
AP	3006-400-552	Spring Arm, A	1
AR	3006-400-553	Spring Arm, B	1
AT	3006-400-554	Spring Arm Stop	1
AU	3006-400-557	Spring Arm Cap	2
AV	3006-400-560	Gas Spring	1
AW	3006-400-561	Spring Plunger Clip	2
AY	3006-400-564	Glide Rod	2
BA	3006-400-570	Release Handle Assembly	1
BB	3006-400-566	Retainer Plate Handle	1
BC	3006-400-567	Extension Spring	1
BD	3006-400-568	Bearing	4
BE	3006-400-569	Glide Rod Restraint	2
BF	3006-400-581	Machined Support Plate	1
BG	3006-400-584	Speed Nut	4
BH	3006-400-618	Inner Arm Cover	2
BJ	3006-400-619	Outer Arm Cover	2
BK	3006-400-207	Head End & Foot End Blank Siderail Label, Right	1
BL	3006-400-522	Siderail Fastener Cover Label	3
BM	3006-400-401	Foot Siderail Label	1
BN	3006-400-402	Foot RH Siderail Label	1

Return To Table of Contents

Siderail Ass'y, *i*Bed® Awareness Option, FE Left - 3006-400-305

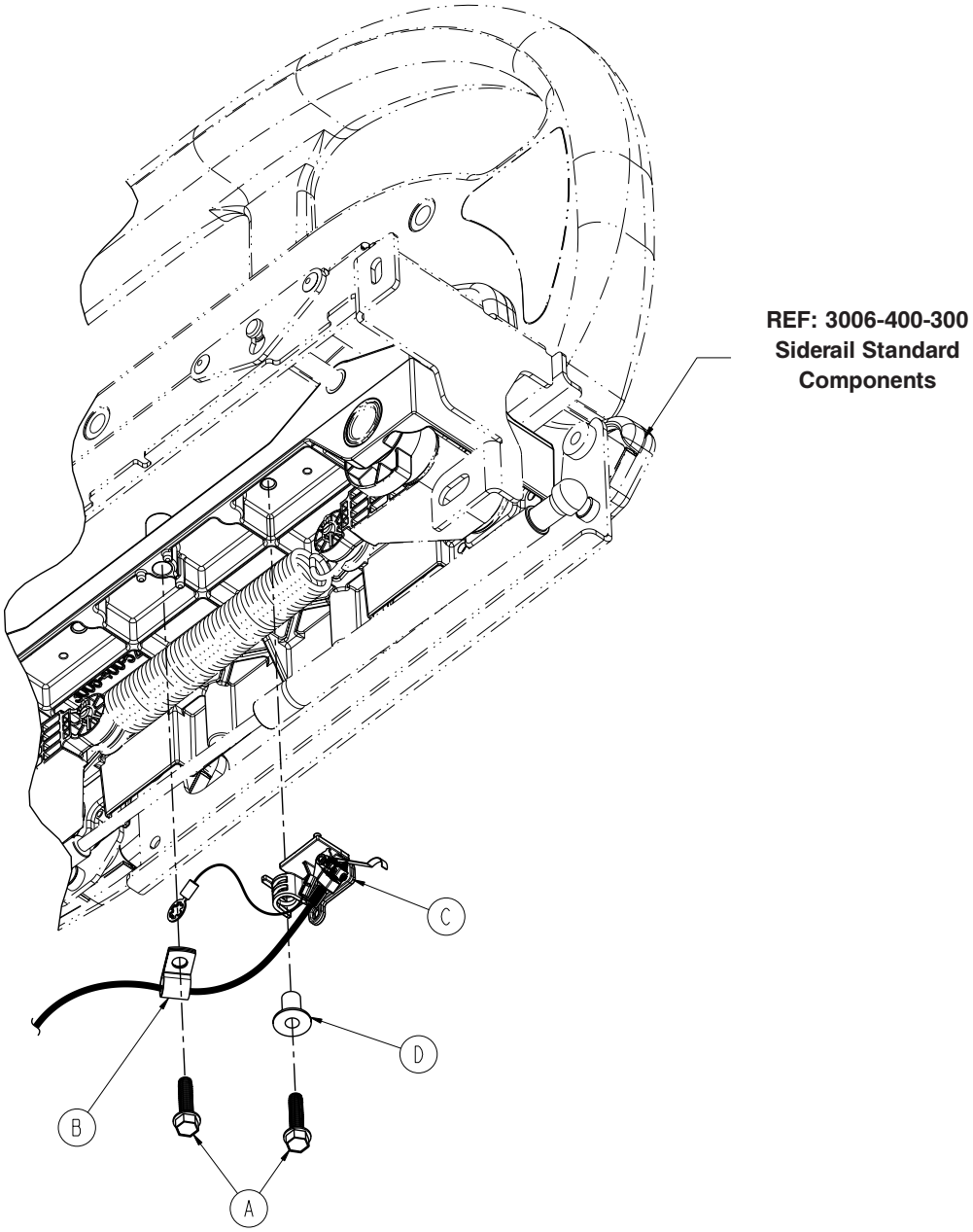

Item	Part No.	Part Name	Qty.
A	0023-123-000	Hex Washer Head Screw	2
B	0058-105-000	P-Clamp	1
C	3006-400-315	Siderail Switch Assembly, FE, Left	1

Return To Table of Contents

Siderail Ass'y, *i*Bed® Awareness Option, FE, Right - 3006-400-405

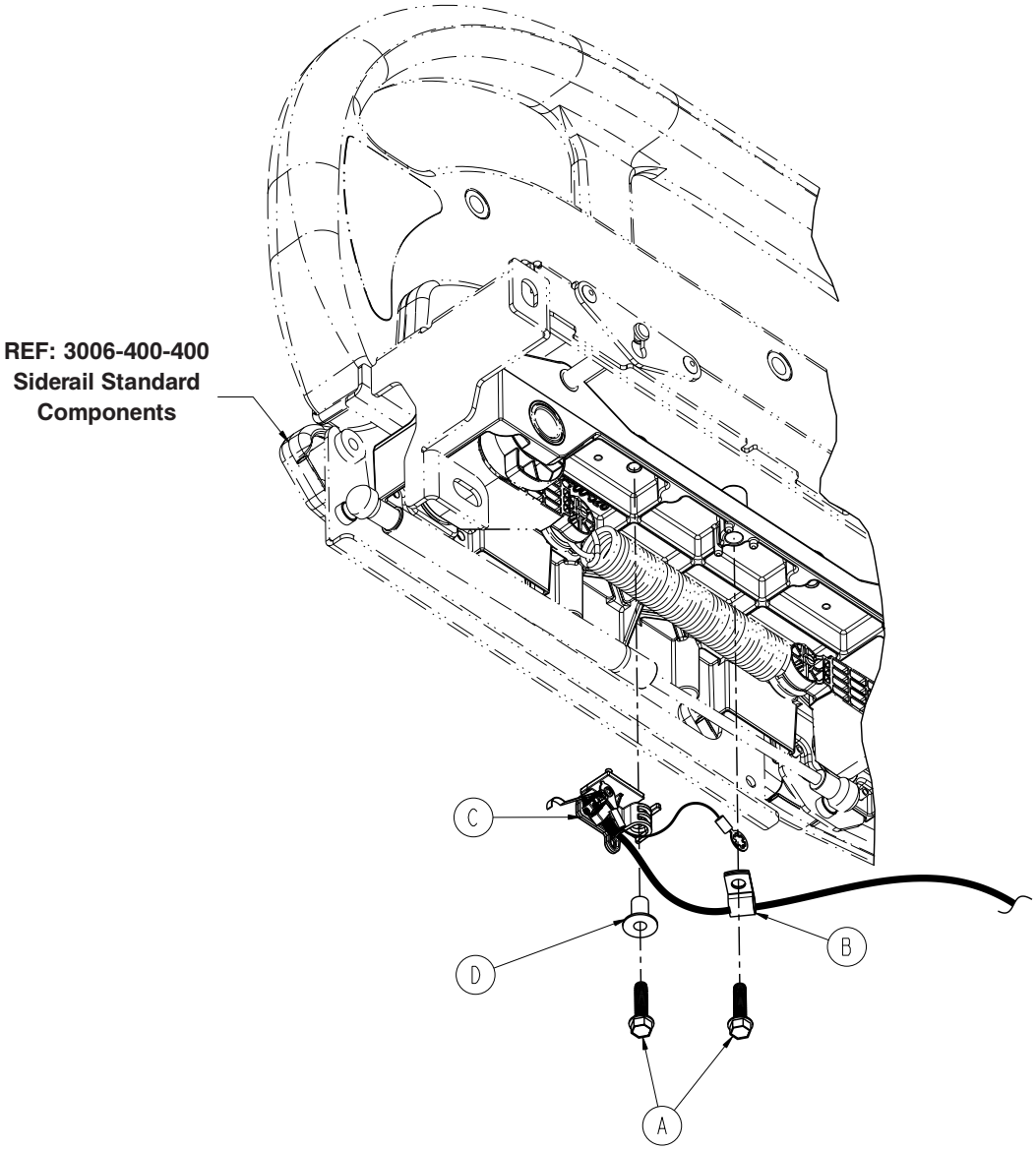

Item	Part No.	Part Name	Qty.
A	0023-123-000	Hex Washer Head Screw	2
B	0058-105-000	P-Clamp	1
C	3006-400-415	Siderail Switch Assembly, FE, Right	1

Return To Table of Contents

Switch Assembly, *i*Bed® Awareness Option, Foot End, 3006-400-315 (Left) / 3006-400-415 (Right)

LEFT SHOWN

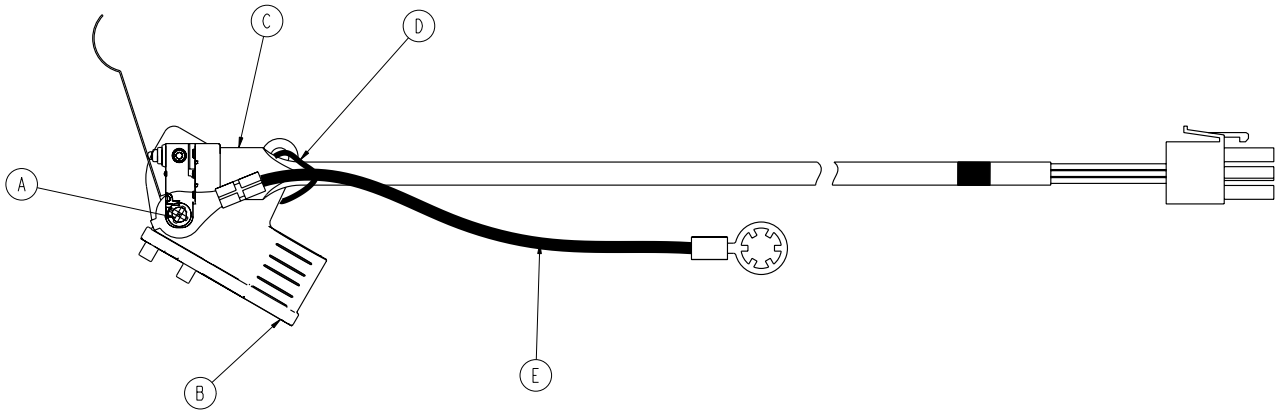

Foot End Left - 3006-400-315 / Foot End Right - 3006-400-415

Item	Part No.	Part Name	Qty.
A	0023-294-000	High-Low Tapping Screw	1
B	3006-400-558	Switch Holder, Left	1
	3006-400-559	Switch Holder, Right	1
D	3006-400-801	Head End Siderail Switch Cable	1

Return To Table of Contents

PENDANT - MOTION/NURSE CALL
(3006-315-011)

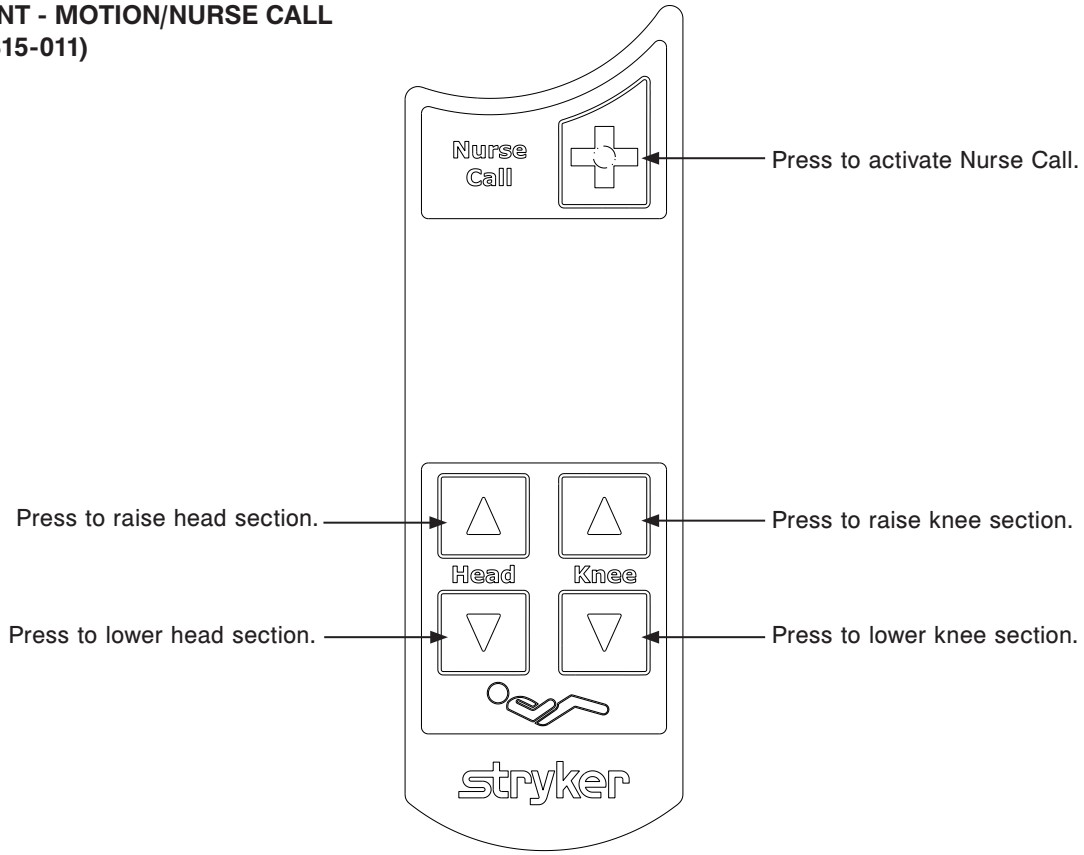

PENDANT - MOTION/NURSE CALL/SMART TV (DIGITAL)
(3006-315-012)

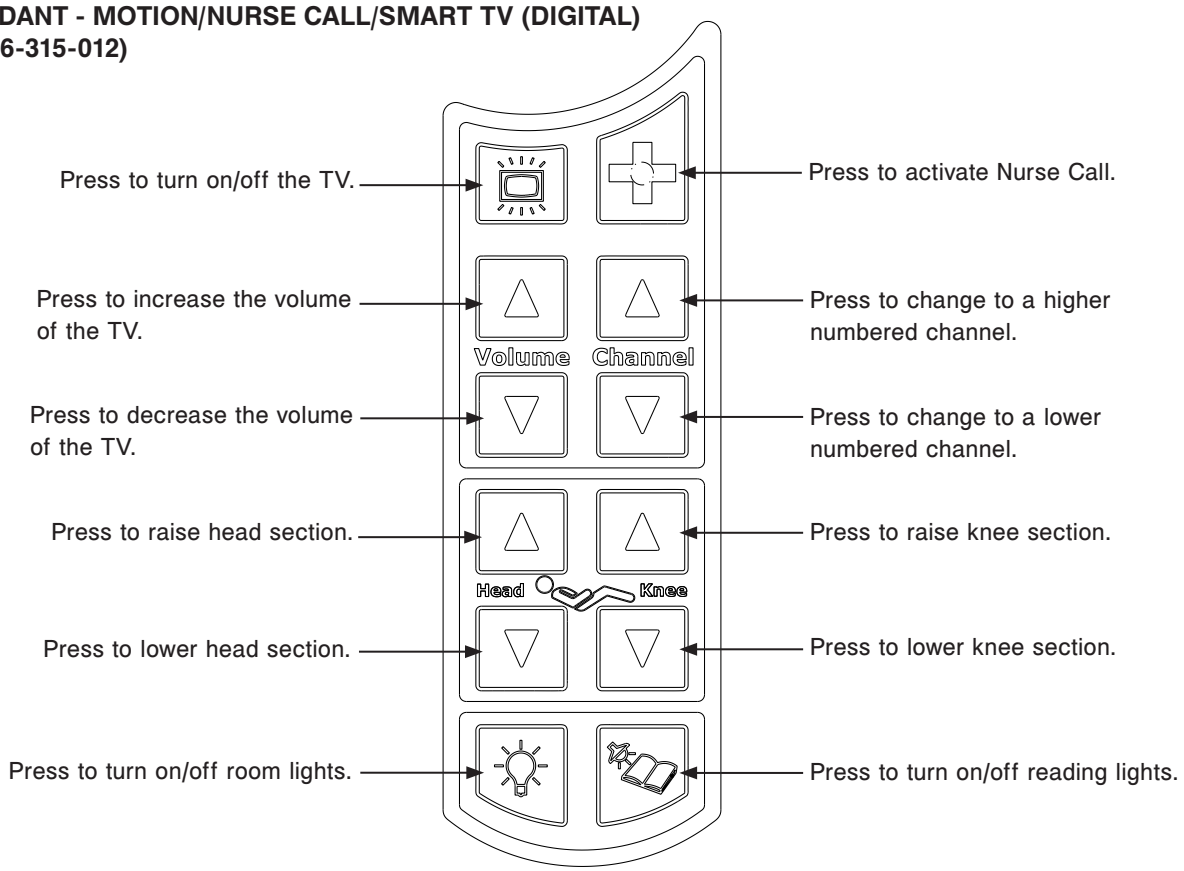

Return To Table of Contents

Notes

Footboard Assembly, Standard

For Reference Only: 3006-502-000

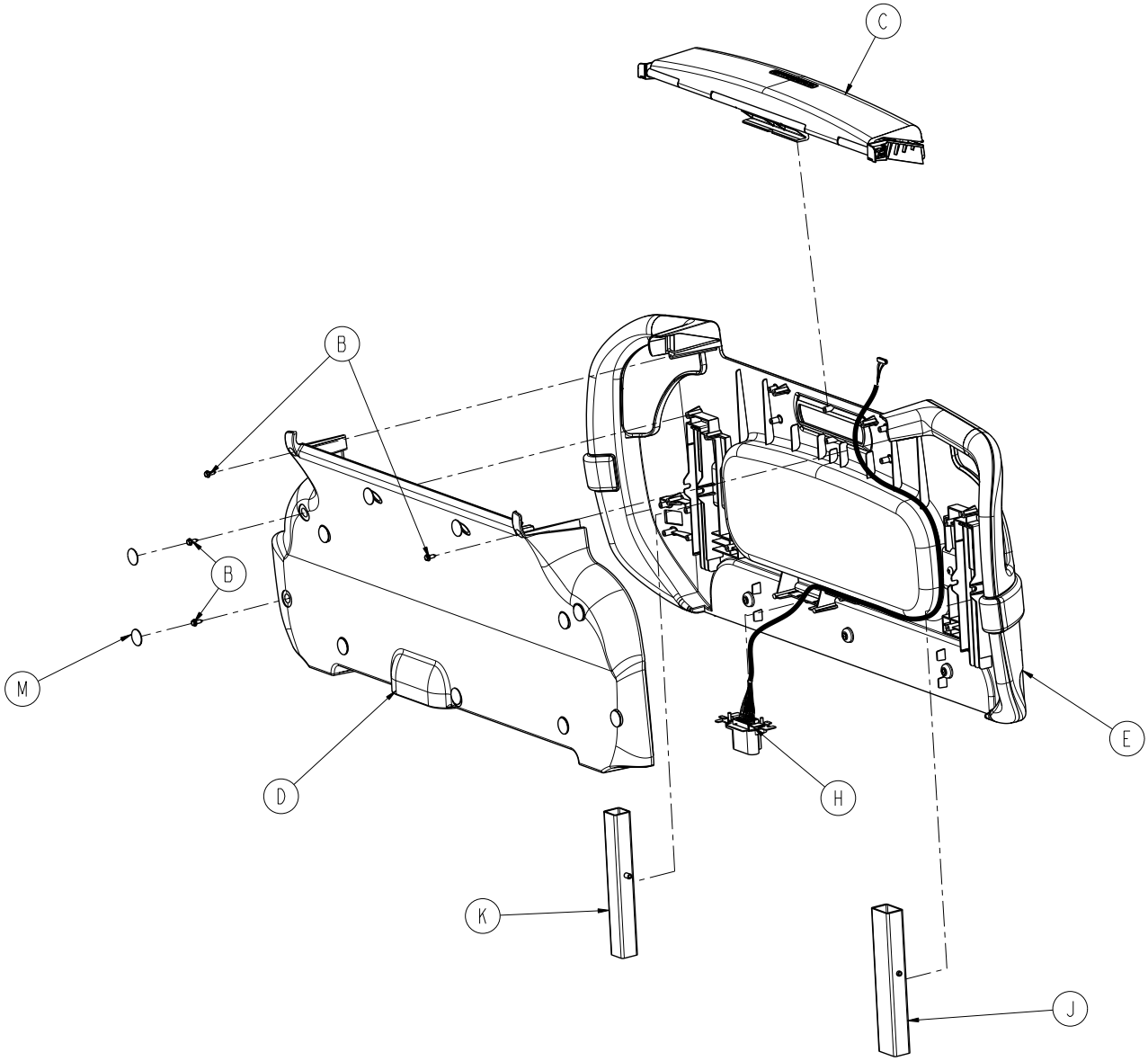

Return To Table of Contents

Footboard Assembly, Standard

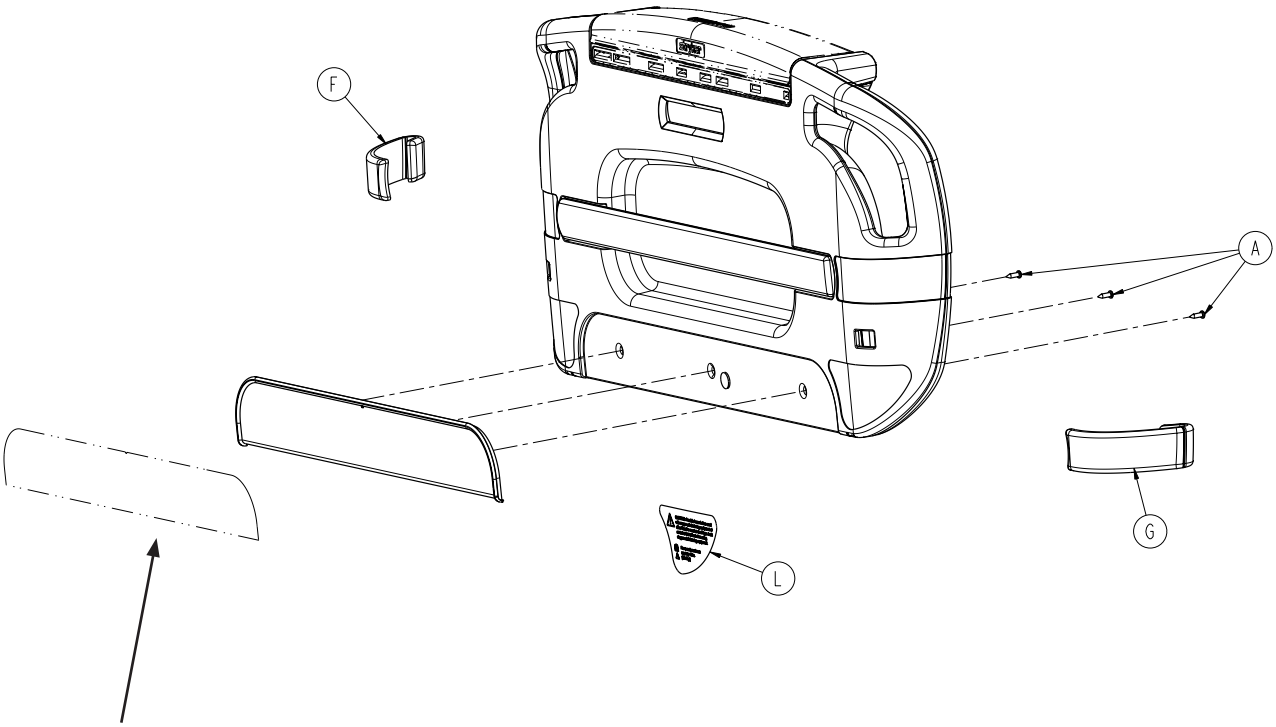

OPTIONAL ACCENT PANEL
(Not included with
Footboard Assembly)

Hard Rock Maple	3006-050-441
Fine Oak	3006-050-442
Port Maple	3006-050-443
Wild Cherry	3006-050-446
Cayenne Maple	3006-050-447
Honey Maple	3006-050-448
Select Cherry	3006-050-449
Sand White (Standard)	3006-050-450

Item	Part No.	Part Name	Qty.
A	0023-319-000	Hex Washer Head Tapping Screw	3
B	0023-318-000	Pan Head Screw	13
C	3006-501-011	Module Footboard Assembly	1
D	3006-500-112	Footboard Cover	1
E	3006-500-010	Footboard Pump Rack Assembly	1
F	3006-500-017	Footboard Bumper, Right	1
G	3006-500-018	Footboard Bumper, Left	1
H	3006-500-030	Footboard Connector Assembly	1
J	3006-500-050	Guide Tube - Rectangular Assembly	1
K	3006-500-055	Guide Tube - Square Assembly	1
L	3006-508-010	Oxygen Warning Label	1
M	3006-508-011	Footboard Screw Cover Label	11

*** Kit, Footboard Assembly, Front Shell Only - 3006-700-100**

Return To Table of Contents

Footboard Module Assembly

For Reference Only: 3006-501-011

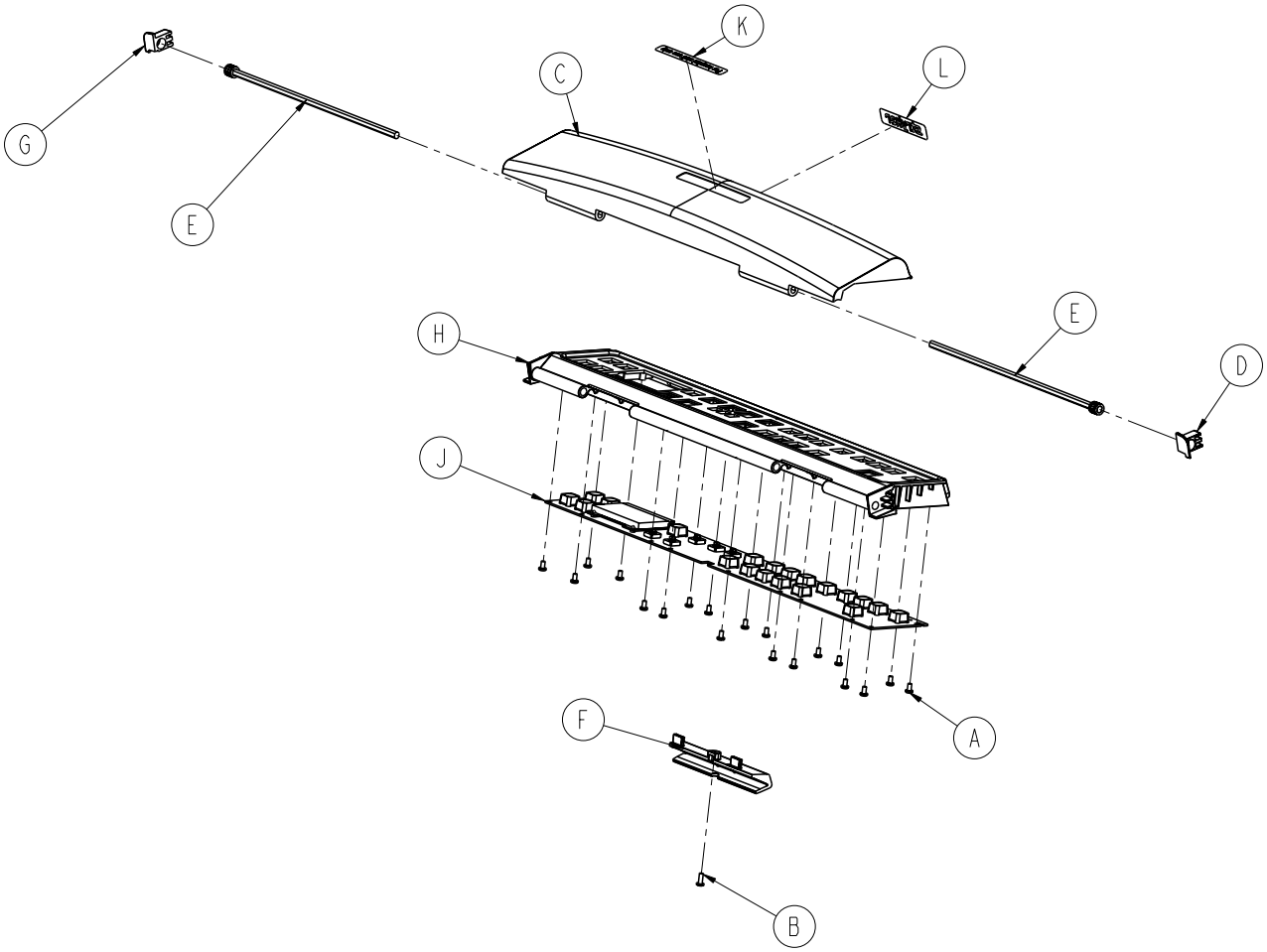

Item	Part No.	Part Name	Qty.
A	0023-087-000	Pan Head Tapping Screw	19
B	0023-103-000	Pan Head Tapping Screw	1
C	3006-500-001	Footboard Lid	1
D	3006-500-028	Bushing, Right	1
E	3006-500-029	PCB Shaft Damper Weldment	2
F	3006-500-031	PCB Mount Support	1
G	3006-500-032	Bushing, Left	1
H	3006-500-202	Footboard PCB Support	1
J	3006-501-900	Wireless Footboard PCB Assembly	1
K	3006-508-013	Lid, Hospital Staff Use Label	1
L	3006-508-014	Lid, Logo Label	1

Return To Table of Contents

Footboard Assembly, No Options

For Reference Only: 3006-500-104

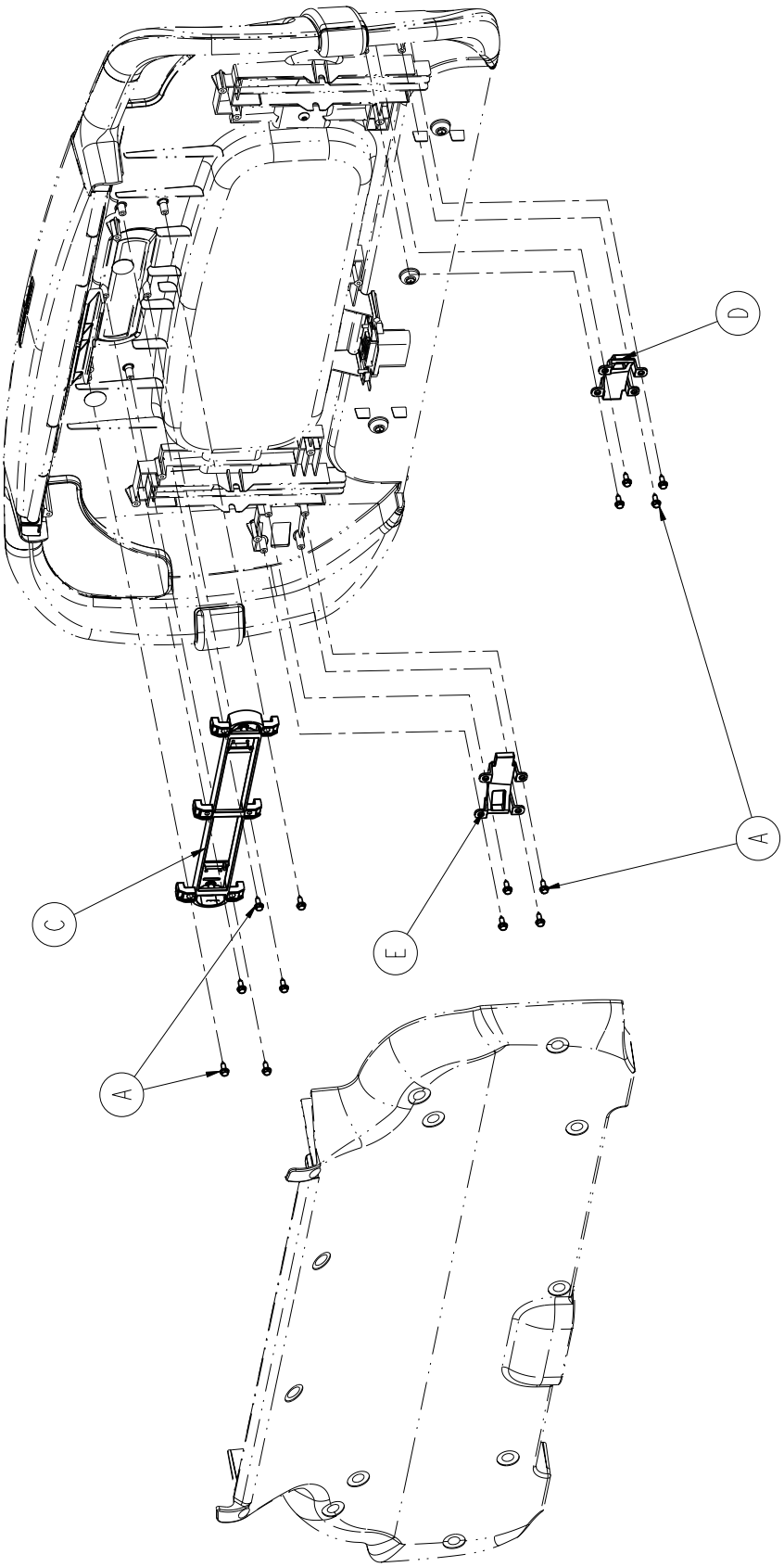

Return To Table of Contents

Footboard Assembly, No Options

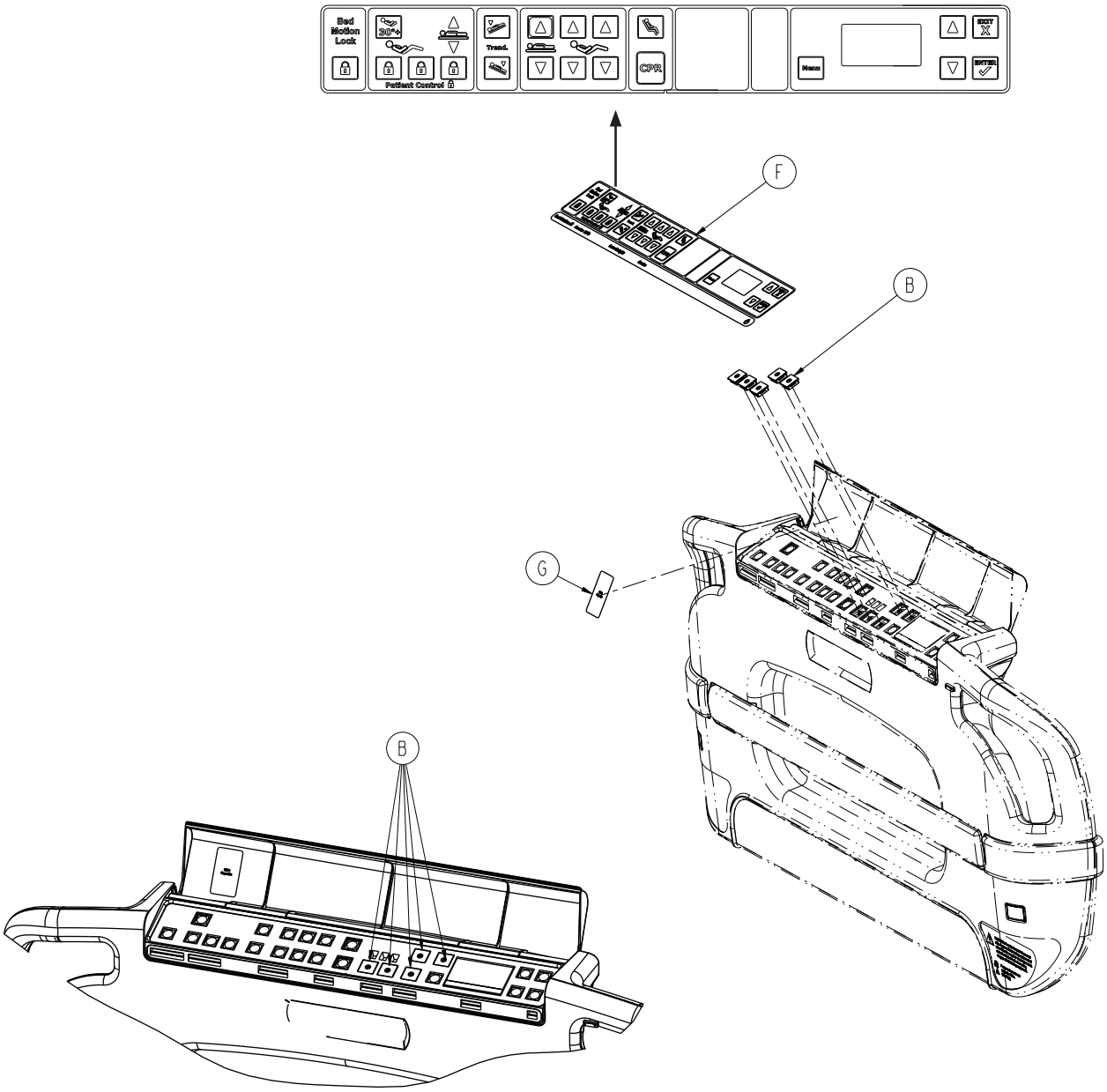

Footboard Assembly, No Options - 3006-500-104

Item	Part No.	Part Name	Qty.
A	0023-319-000	Hex Washer Head Tapping Screw	14
B	3001-400-522	Filler Cap	5
C	3006-500-007	Center Lens Assembly	1
D	3006-500-081	Non-LBS Lens, Blank Inserts, RH	1
E	3006-500-082	Non-LBS Lens, Blank Inserts, LH	1
F	3006-508-004	Footboard Label, No Scale, No Bed Exit	1
G	3006-508-105	Lable, WiFi Capable	1

*** Kit, Footboard Assembly, No Options - 3006-700-131**

Return To Table of Contents

Footboard Assembly, Bed Exit Option

For Reference Only: 3006-500-105

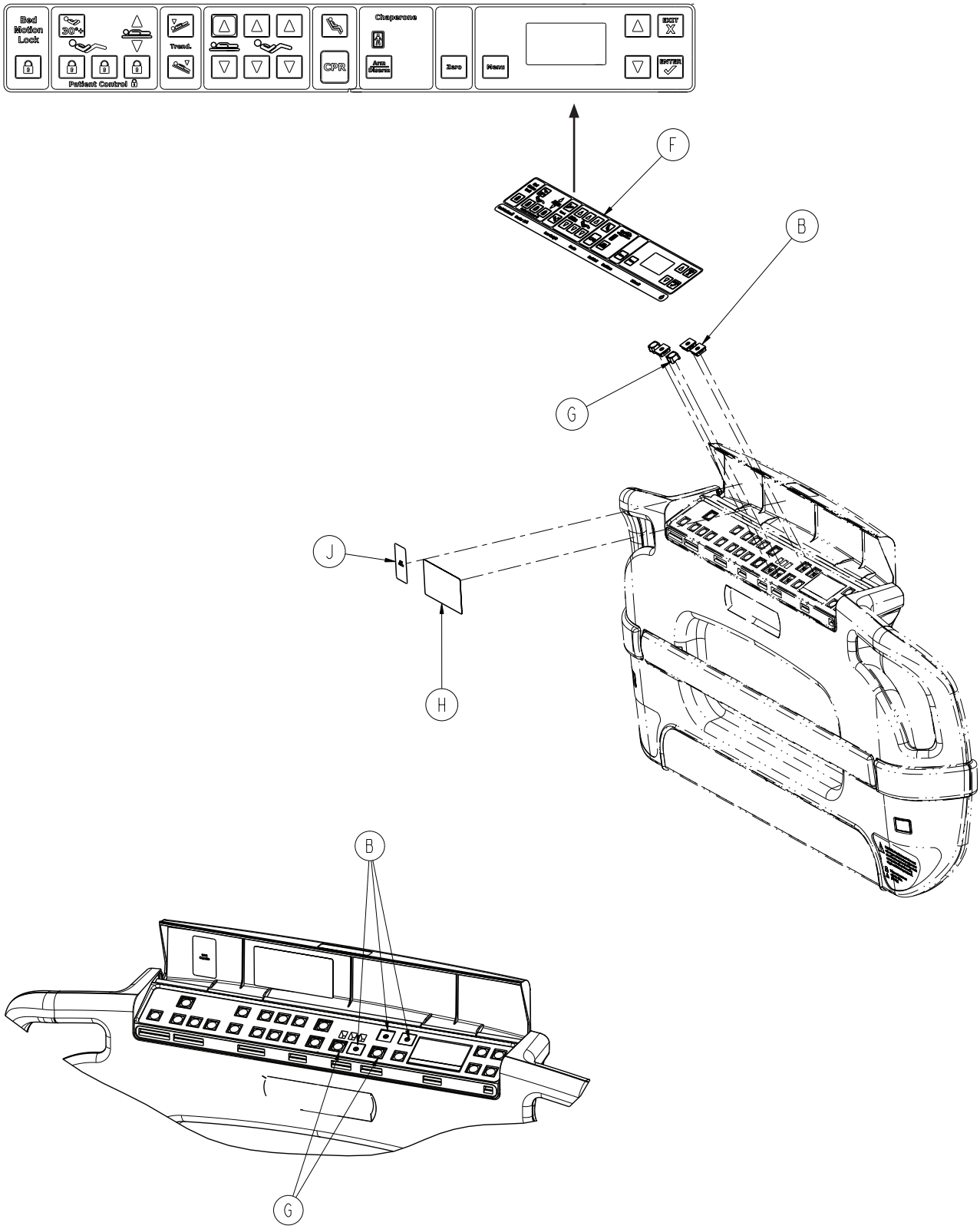

FILLER AND SWITCH CAP PLACEMENT

Return To Table of Contents

Footboard Assembly, Bed Exit Option - 3006-501-105

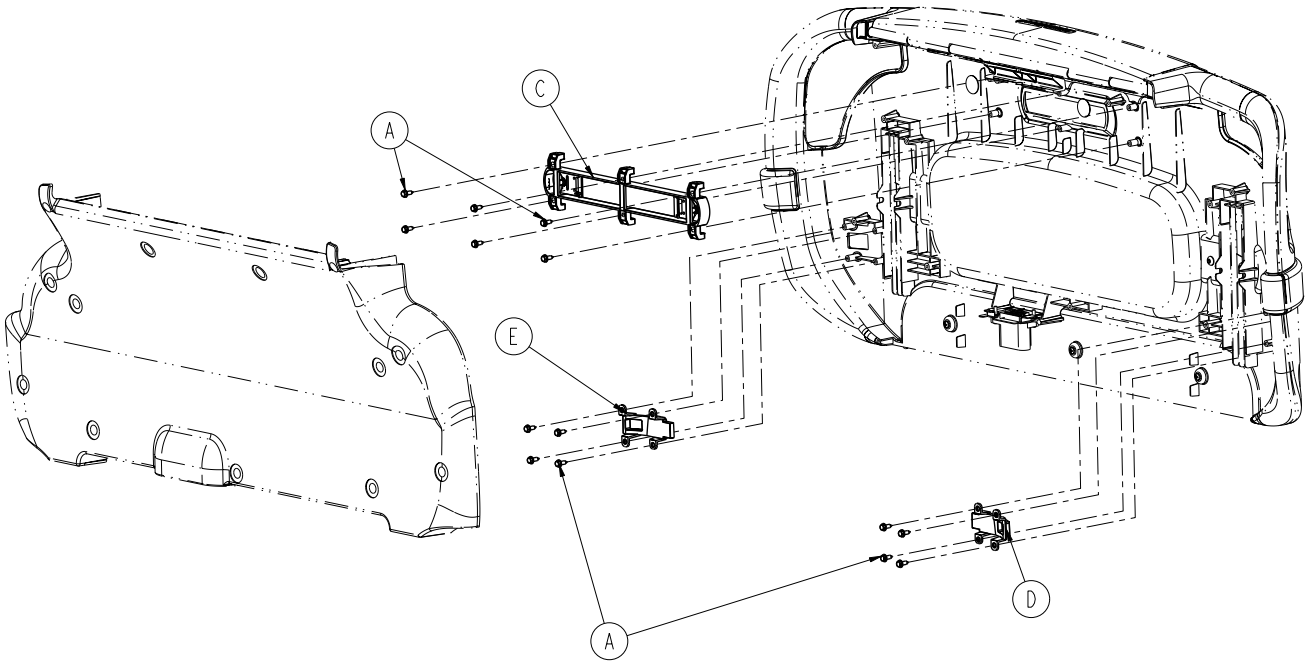

Footboard Assembly, Bed Exit Option - 3006-500-105

Item	Part No.	Part Name	Qty.
A	0023-319-000	Hex Washer Head Tapping Screw	14
B	3001-400-522	Filler cap	3
C	3006-500-007	Center Lens Assembly	1
D	3006-500-081	Non-LBS Lens Blank Insert, RH	1
E	3006-500-082	Non-LBS Lens Blank Insert, LH	1
F	3006-508-005	Footboard Label, Bed Exit, No Scale	1
G	3001-400-953	Switch Cap	2
H	3006-508-109	Label, Bed Exit	1
J	3006-508-105	Label, WiFi Capable	1

*** Kit, Footboard Assembly, Single Zone Bed Exit - 3006-700-132**

Return To Table of Contents

Footboard Assembly, Bed Exit/Scale Option

For Reference Only: 3006-500-107

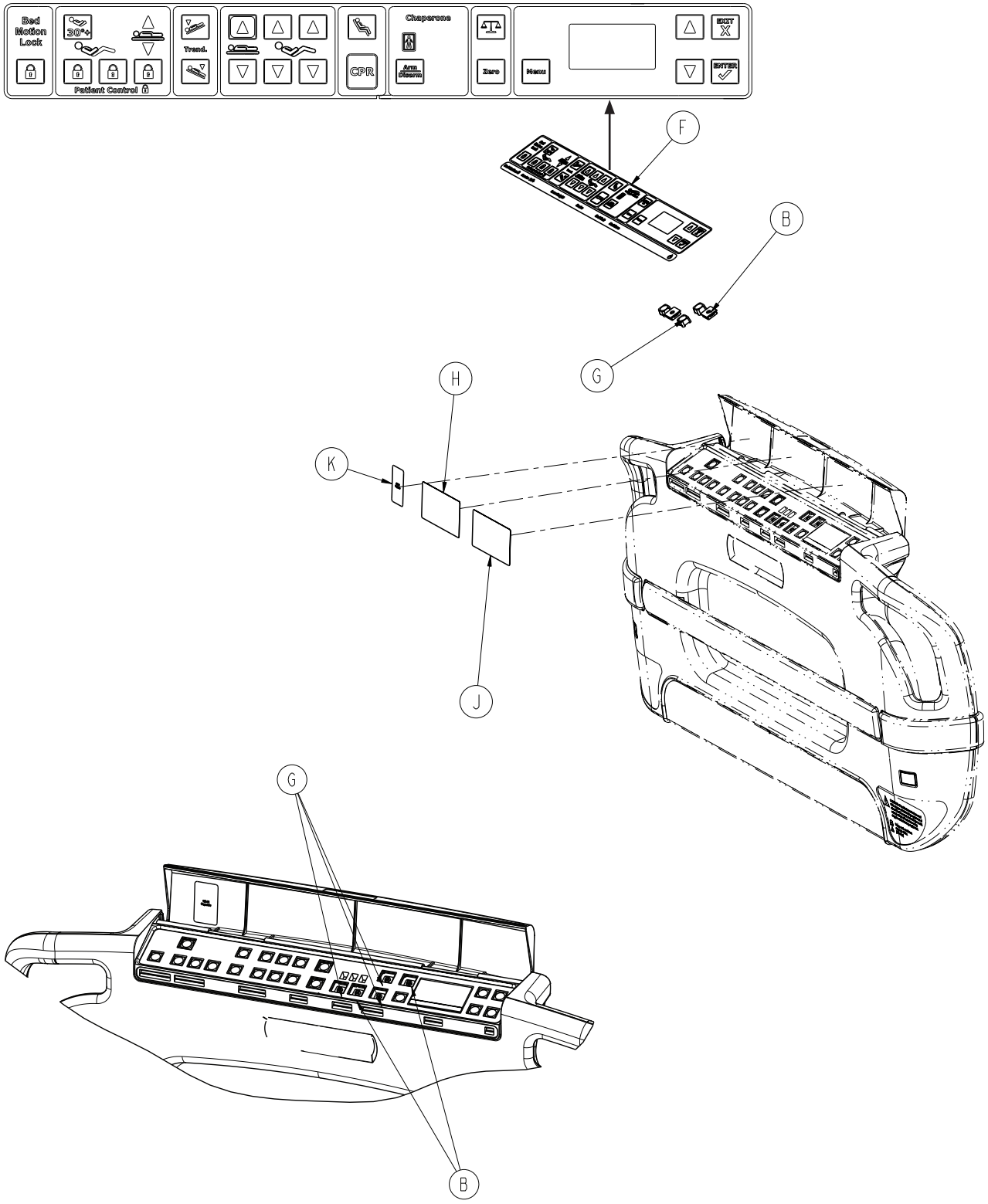

FILLER AND SWITCH CAP PLACEMENT

Return To Table of Contents

Footboard Assembly, Bed Exit/Scale Option

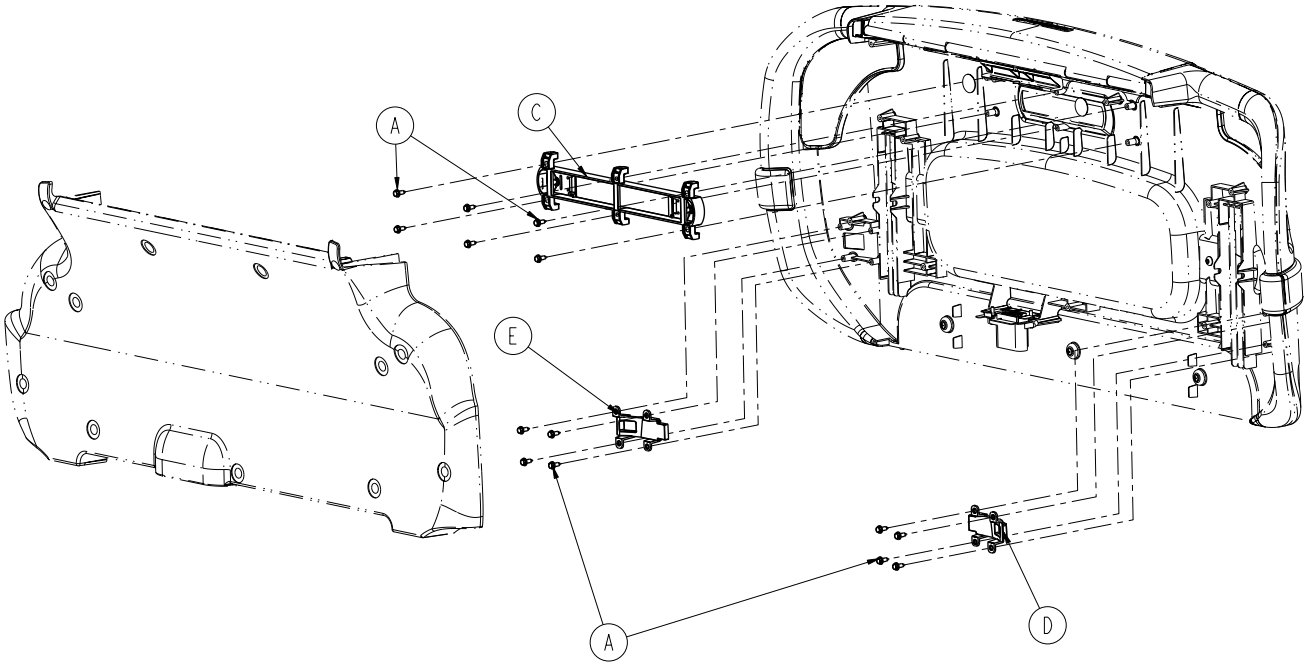

Footboard Assembly, Bed Exit/Scale Option - 3006-500-107

Item	Part No.	Part Name	Qty.
A	0023-319-000	Hex Washer Head Tapping Screw	14
B	3001-400-522	Filler cap	2
C	3006-500-007	Center Lens Assembly	1
D	3006-500-081	Non-LBS Lens Blank Insert, RH	1
E	3006-500-082	Non-LBS Lens Blank Insert, LH	1
F	3006-508-007	Footboard Label, Bed Exit, Scale	1
G	3001-400-953	Switch Cap	3
H	3006-508-109	Label, Bed Exit	1
J	3006-508-107	Label, Scale	1
K	3006-508-105	Label, WiFi Capable	1

*** Kit, Footboard Assembly, Single Zone Bed Exit/Scale - 3006-700-133**

Return To Table of Contents

Footboard Assembly, Bed Exit/Zone Control Option

For Reference Only: 3006-500-106

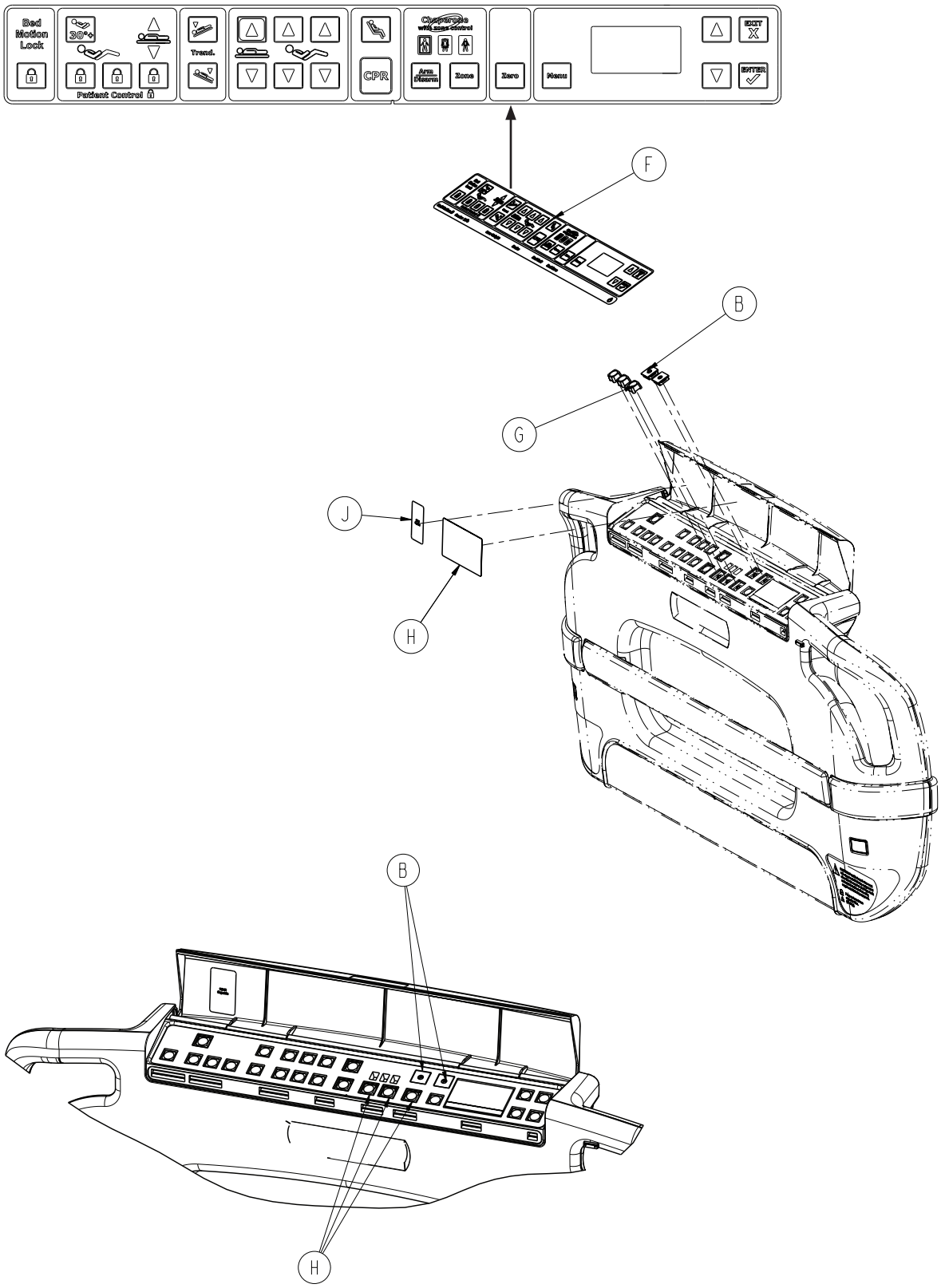

FILLER AND SWITCH CAP PLACEMENT

Return To Table of Contents

Footboard Assembly, Bed Exit/Zone Control Option

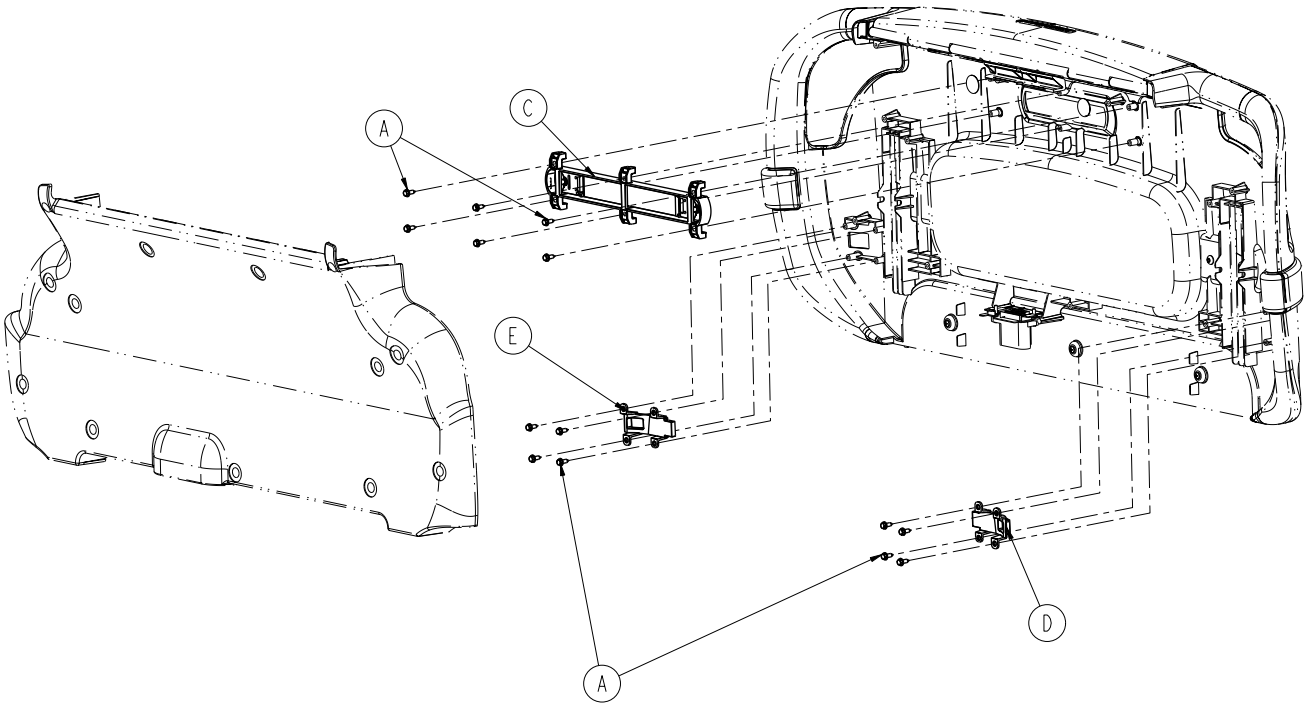

Footboard Assembly, Bed Exit/Zone Control Option - 3006-500-106

Item	Part No.	Part Name	Qty.
A	0023-319-000	Hex Washer Head Tapping Screw	14
B	3001-400-522	Filler Cap	2
C	3006-500-007	Center Lens Assembly	1
D	3006-500-081	Non-LBS Lens Blank Insert, RH	1
E	3006-500-082	Non-LBS Lens Blank Insert, LH	1
F	3006-508-006	Footboard Label, Bed Exit with Zone Control	1
G	3001-400-953	Switch Cap	3
H	3006-508-106	Label, Bed Exit with Zone Control	1
J	3006-508-105	Label, WiFi Capable	1

*** Kit, Footboard Assembly, Multi-Zone Bed Exit - 3006-700-134**

Return To Table of Contents

Footboard Assembly, Bed Exit/Scale/Zone Option

For Reference Only: 3006-500-109

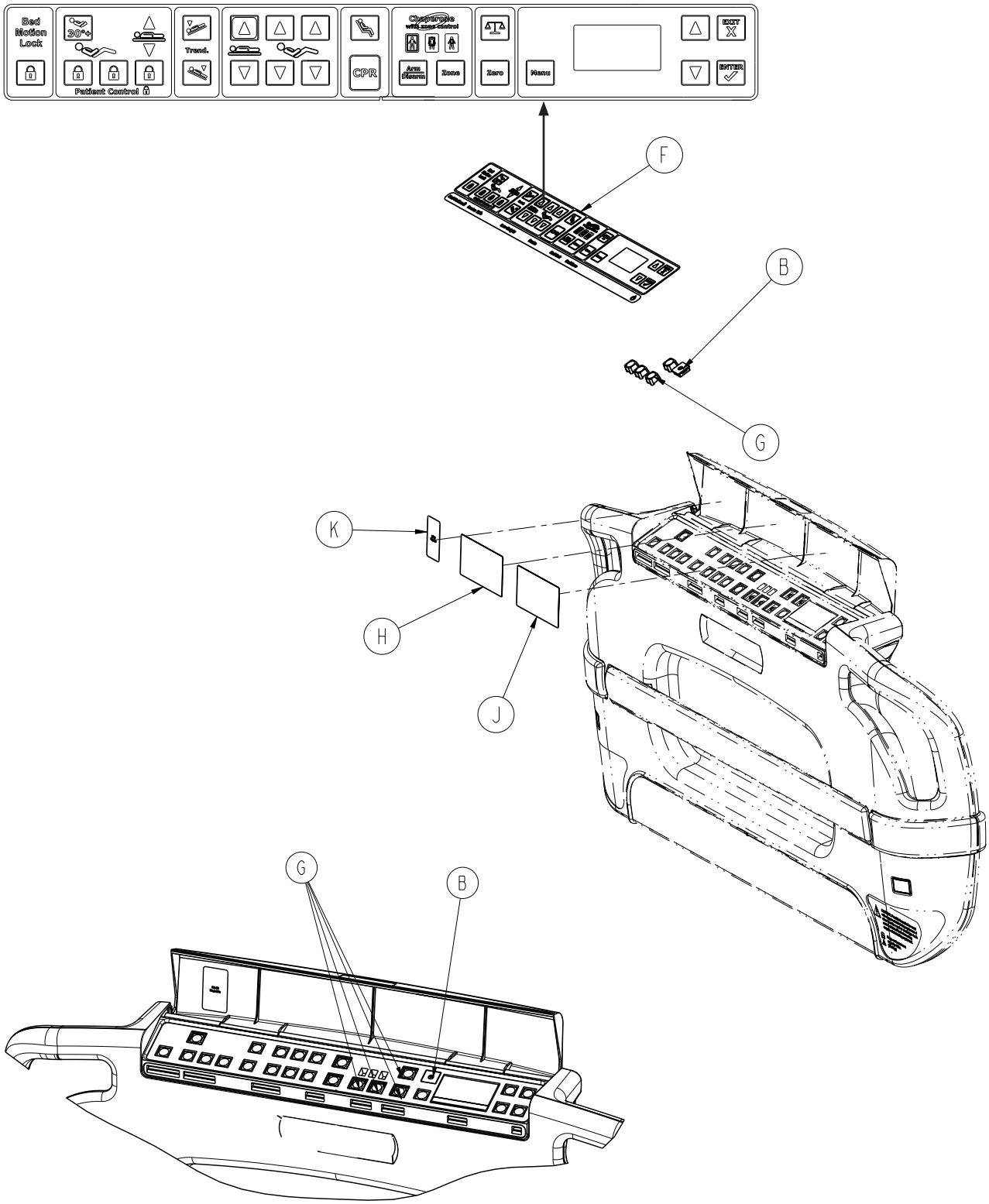

FILLER AND SWITCH CAP PLACEMENT

Return To Table of Contents

Footboard Assembly, Bed Exit/Scale/Zone Option

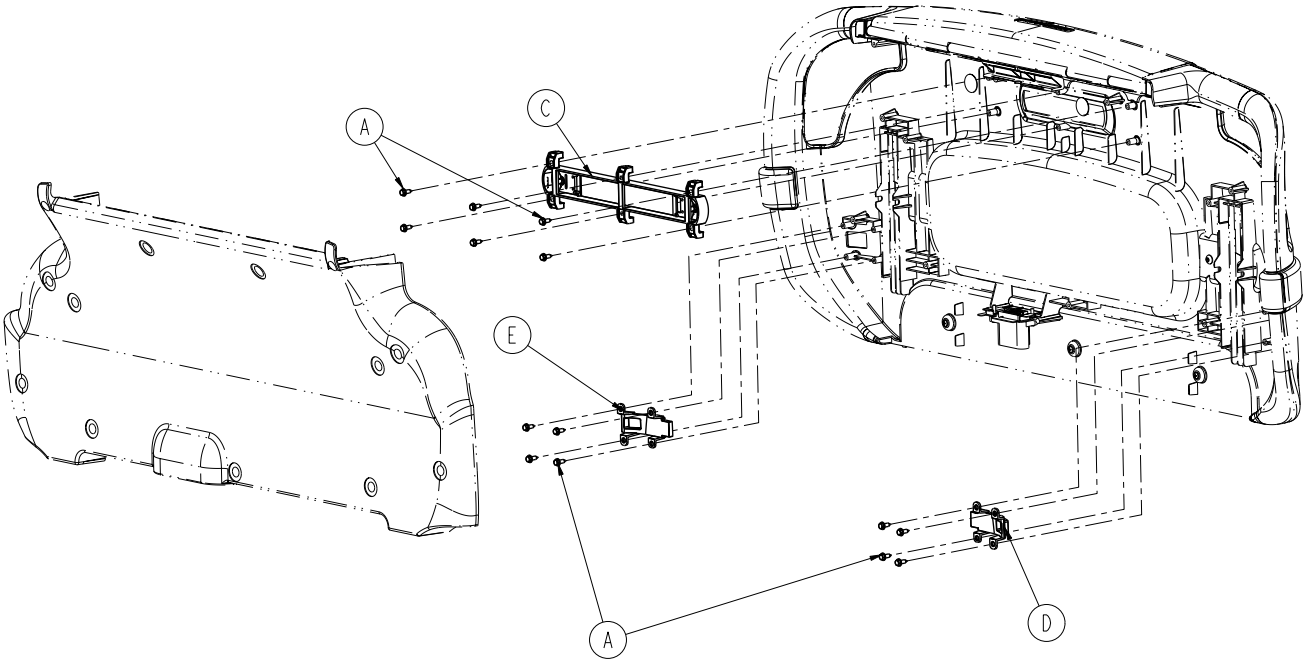

Footboard Assembly, Bed Exit/Scale/Zone Control Option - 3006-500-109

Item	Part No.	Part Name	Qty.
A	0023-319-000	Hex Washer Head Tapping Screw	14
B	3001-400-522	Filler cap	1
C	3006-500-007	Center Lens Assembly	1
D	3006-500-081	Non-LBS Lens Blank Insert, RH	1
E	3006-500-082	Non-LBS Lens Blank Insert, LH	1
F	3006-508-009	Footboard Label, Bed Exit, Scale and Zone Control	1
G	3001-400-953	Switch Cap	4
H	3006-508-106	Label, Bed Exit with Zone Control	1
J	3006-508-107	Label, Scale	1
K	3006-508-105	Label, WiFi Capable	1

*** Kit, Footboard Assembly, Multi-Zone Bed Exit/Scale - 3006-700-135**

Return To Table of Contents

Footboard Assembly, *i*Bed® Awareness Option

(with Bed Exit, Scale and Zone Control)

For Reference Only: 3006-500-100

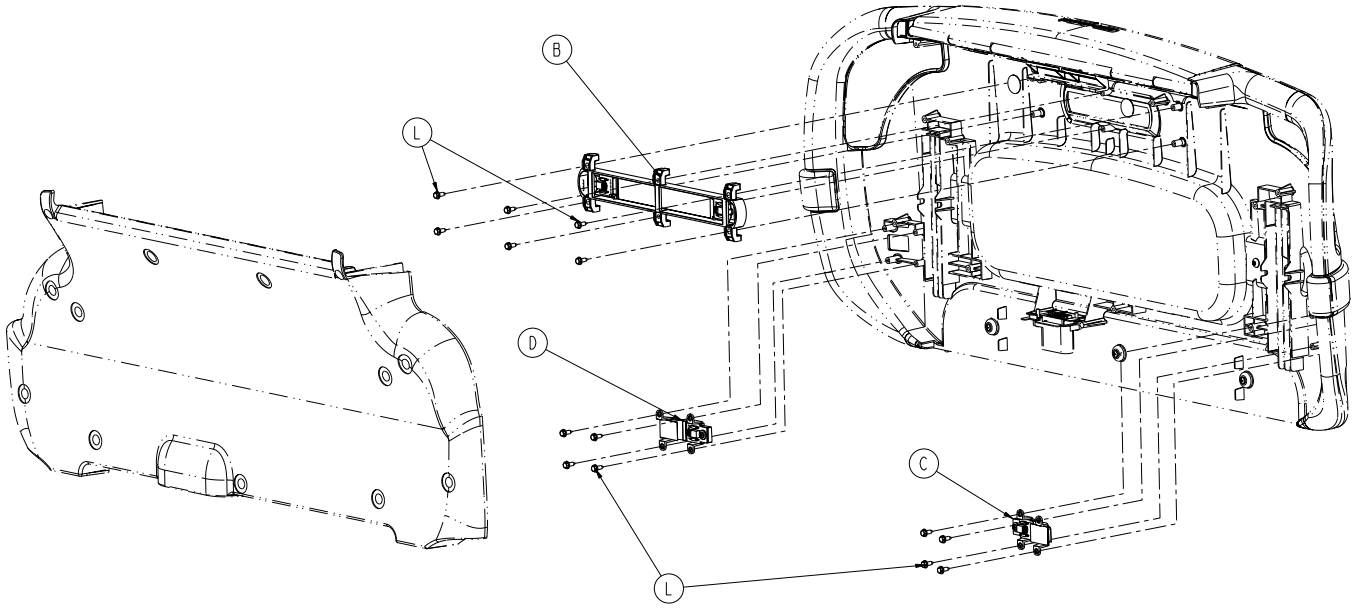

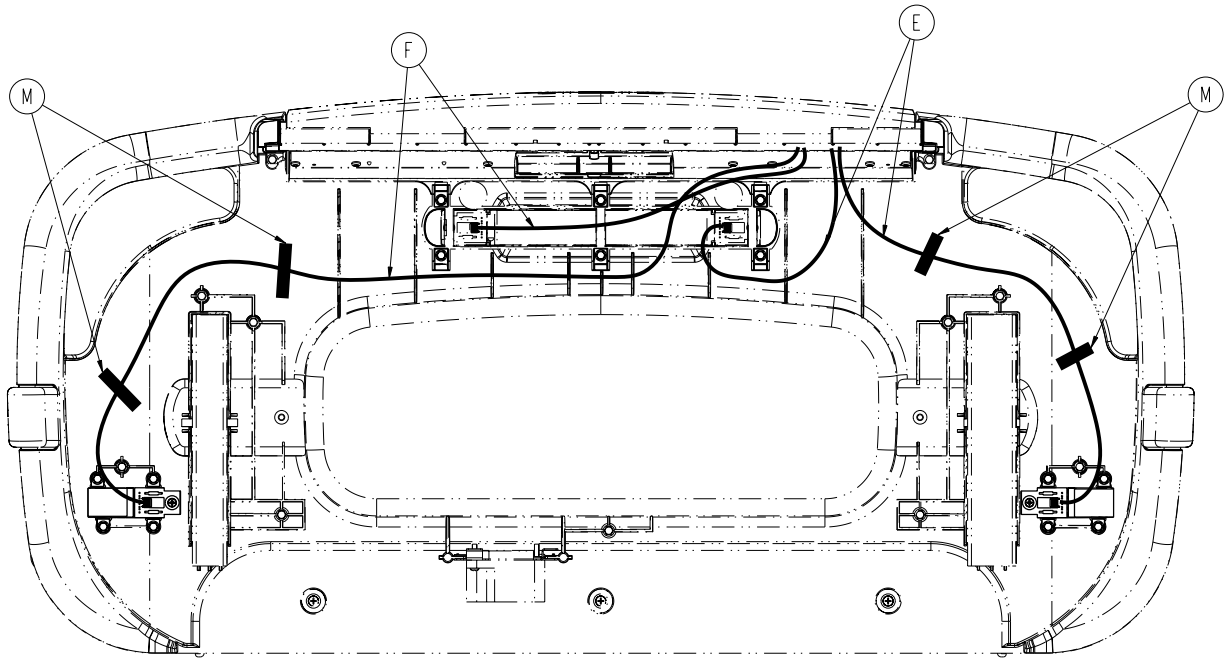

Return To Table of Contents

Footboard Assembly, *i*Bed® Awareness Option

(with Bed Exit, Scale and Zone Control)

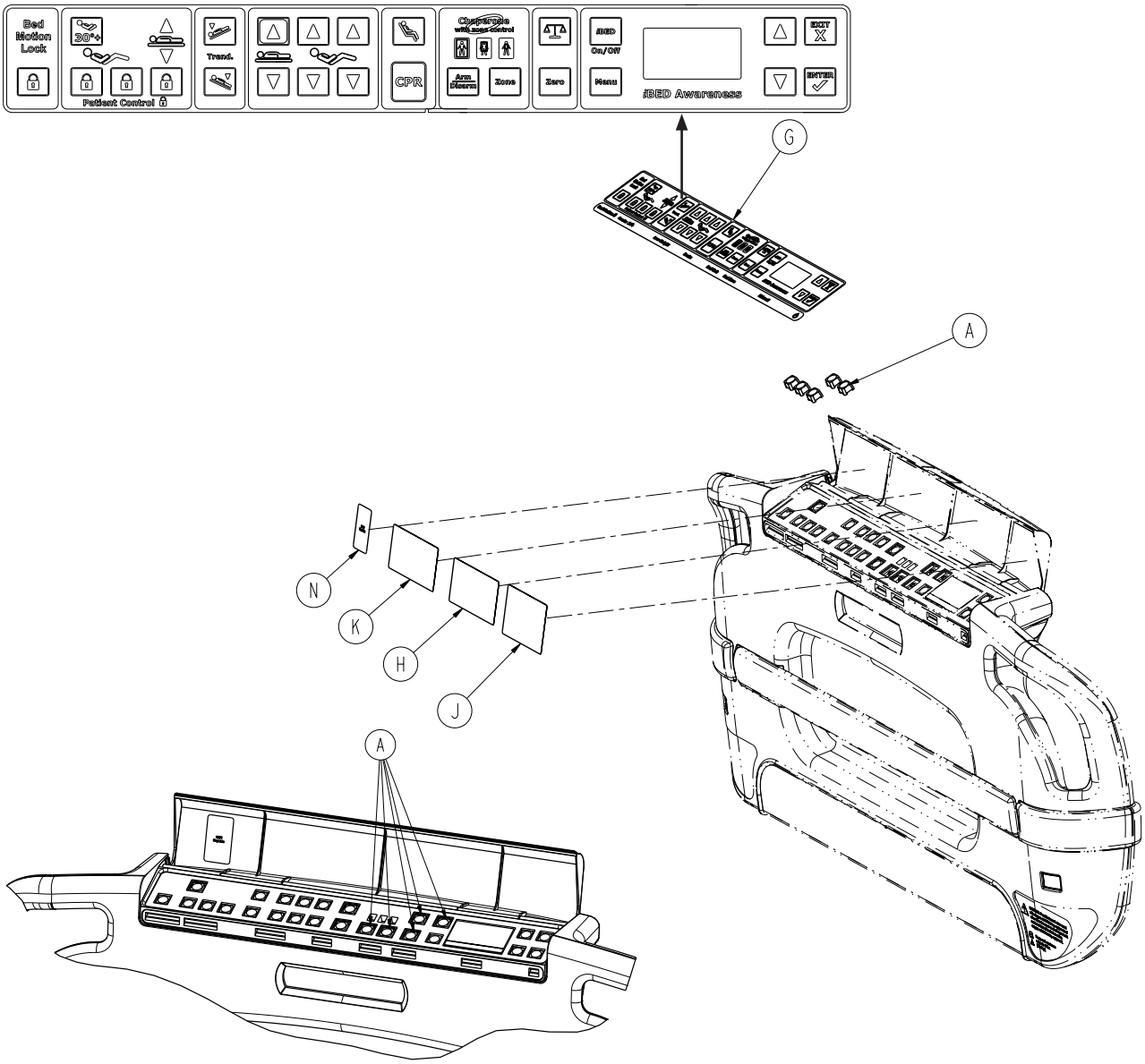

Footboard Assembly, *i*Bed® Awareness Option (with Bed Exit, Scale and Zone Control) - 3006-500-100

Item	Part No.	Part Name	Qty.
A	3001-400-953	Switch Cap	5
B	3006-500-008	Indicator Light Assembly	1
C	3006-500-080	Footboard Right Lens Assembly	1
D	3006-500-090	Footboard Left Lens Assembly	1
E	3006-500-804	Footboard Cable, Right Lens	1
F	3006-500-805	Footboard Cable, Left Lens	1
G	3006-508-002	Label, Bed Exit with Zone Control	1
H	3006-508-107	Label, Scale	1
J	3006-508-108	Label, Awareness	1
K	3006-508-106	Label, Bed Exit with Zone Control	1
L	0023-319-000	Hex Washer Head Tapping Screw	14
M	3006-400-208	Label, Cable Restraint	4
N	3006-508-105	Label, WiFi Capable	1

*** Kit, Footboard Assembly, *i*Bed® Awareness - 3006-700-136**

Return To Table of Contents

Headboard Assembly - 3006-600-010

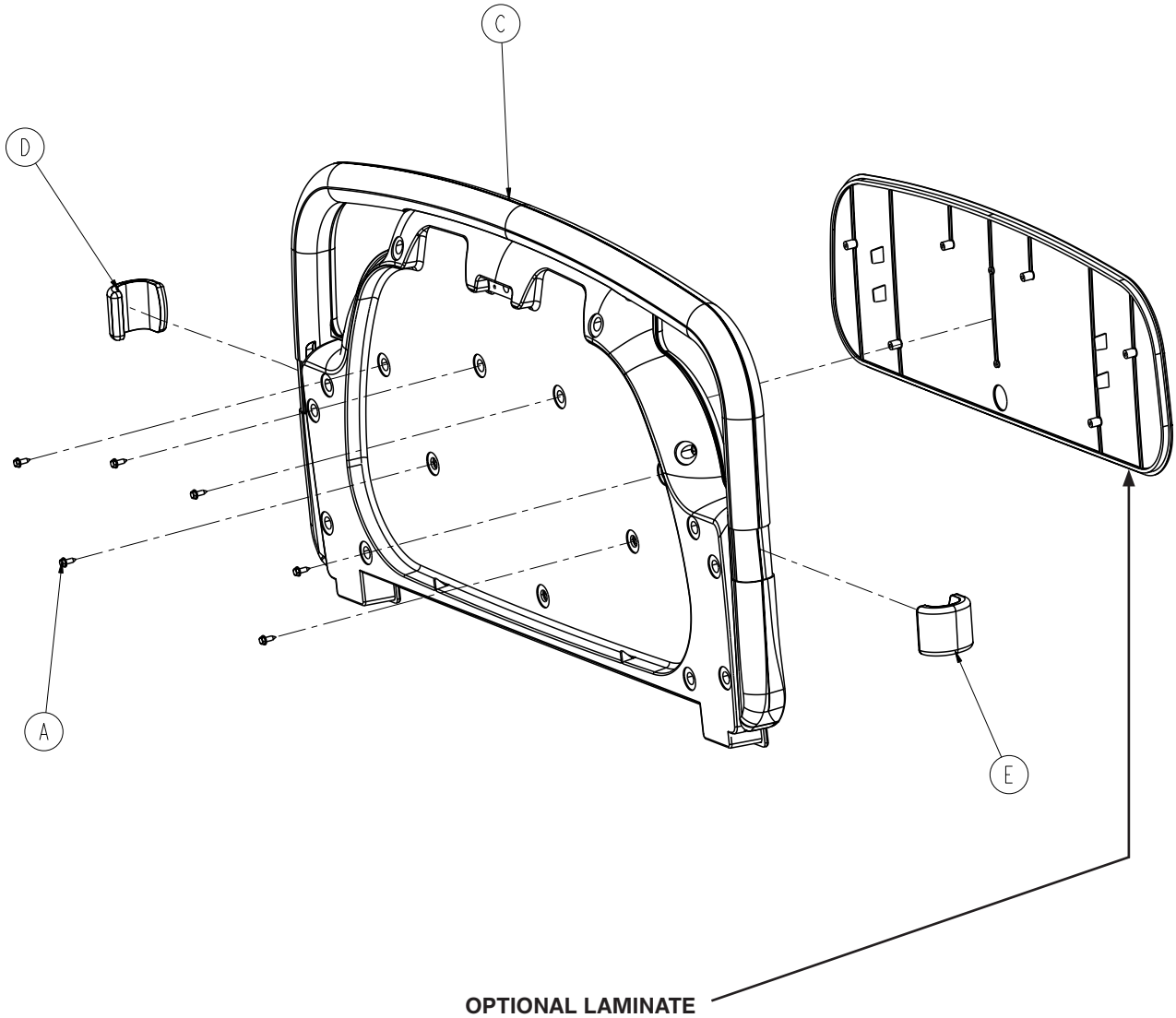

OPTIONAL LAMINATE
(Not included with
Headboard Assembly)

Hard Rock Maple	3006-060-441
Fine Oak	3006-060-442
Port Maple	3006-060-443
Wild Cherry	3006-060-446
Cayenne Maple	3006-060-447
Honey Maple	3006-060-448
Select Cherry	3006-060-449
Sand White (Standard)	3006-060-450

Return To Table of Contents

Headboard Assembly - 3006-600-010

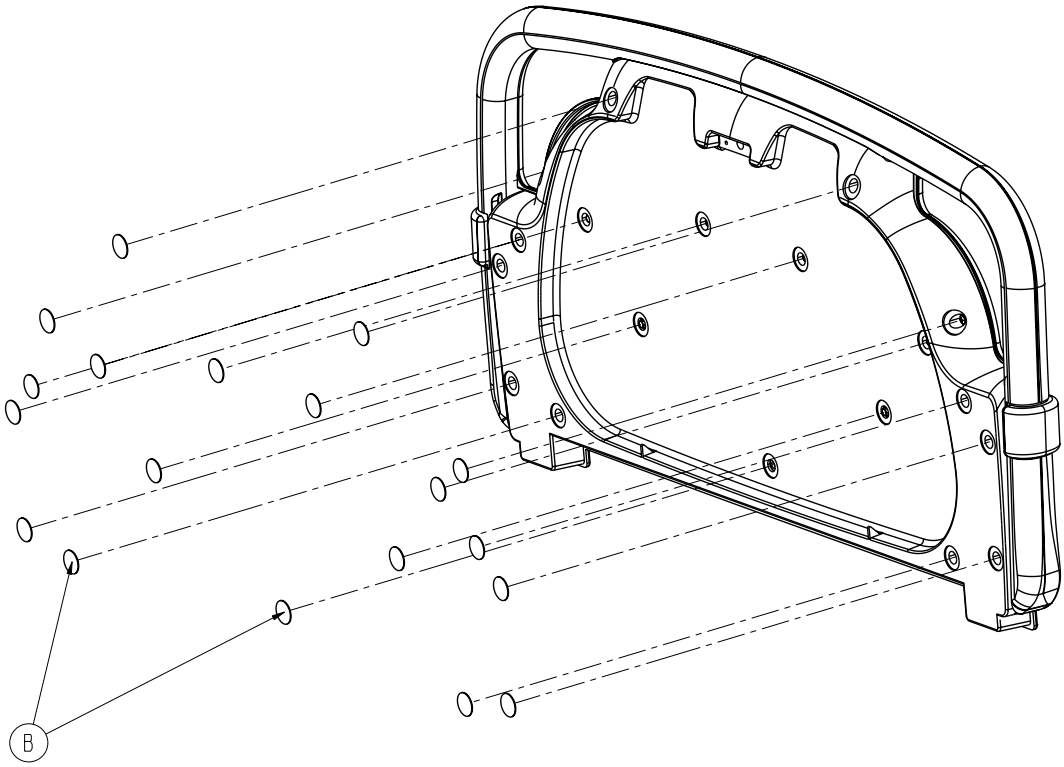

Item	Part No.	Part Name	Qty.
A	0023-319-000	Hex Washer Head Screw	6
B	3006-508-011	Footboard Screw Cover Label	19
C	3006-600-000	Headboard Ass'y, Standard Comp.	1
D	3006-600-017	Headboard Bumper, Right	1
E	3006-600-018	Headboard Bumper, Left	1

Return To Table of Contents

Optional Accessories

Accessory	Part Number	Page Reference
CPR Board Assembly	3006-626-010	page 401
Removable I.V. Pole and Mounting Assembly	3001-338-010	page 402
Removable I.V. Pole Assembly	3000-300-080	page 403
Two Stage I.V. Pole Assembly	2035-112-000	page 404
Dual Head End I.V. Pole Assembly	2035-113-000	page 405
Dual Head End I.V. Pole Assembly - Zoom®	2040-110-003	page 406
Two Stage I.V. Pole	2035-112-010 2035-113-011	page 407
I.V. Pole Latch Assembly	0785-035-103	page 408
Defibrillator Tray Assembly	3006-120-004	page 409
90˚ Power Cords	3001-334-860 3001-334-861 3001-334-862 3001-334-863	page 410
Upright Oxygen Bottle Holder Assembly	3006-150-000	page 411
Accessory Adapter Frame	3006-333-000	page 412
Patient Helper Assembly	3006-335-000	page 413
Patient Helper Roller Assembly	3006-335-005	page 414
Litter Roller Assembly	3006-345-000	page 415
Roller Assembly	3006-345-005	page 416
Bed Extender Assembly	3006-346-020	page 417
Bed Extender Mattress	3000-318-050	page 419
Traction Socket Extensions	3000-337-050 3000-337-450 3000-337-475 3000-337-850 3000-337-875	page 420

Return To Table of Contents

CPR Board Assembly - 3006-626-010

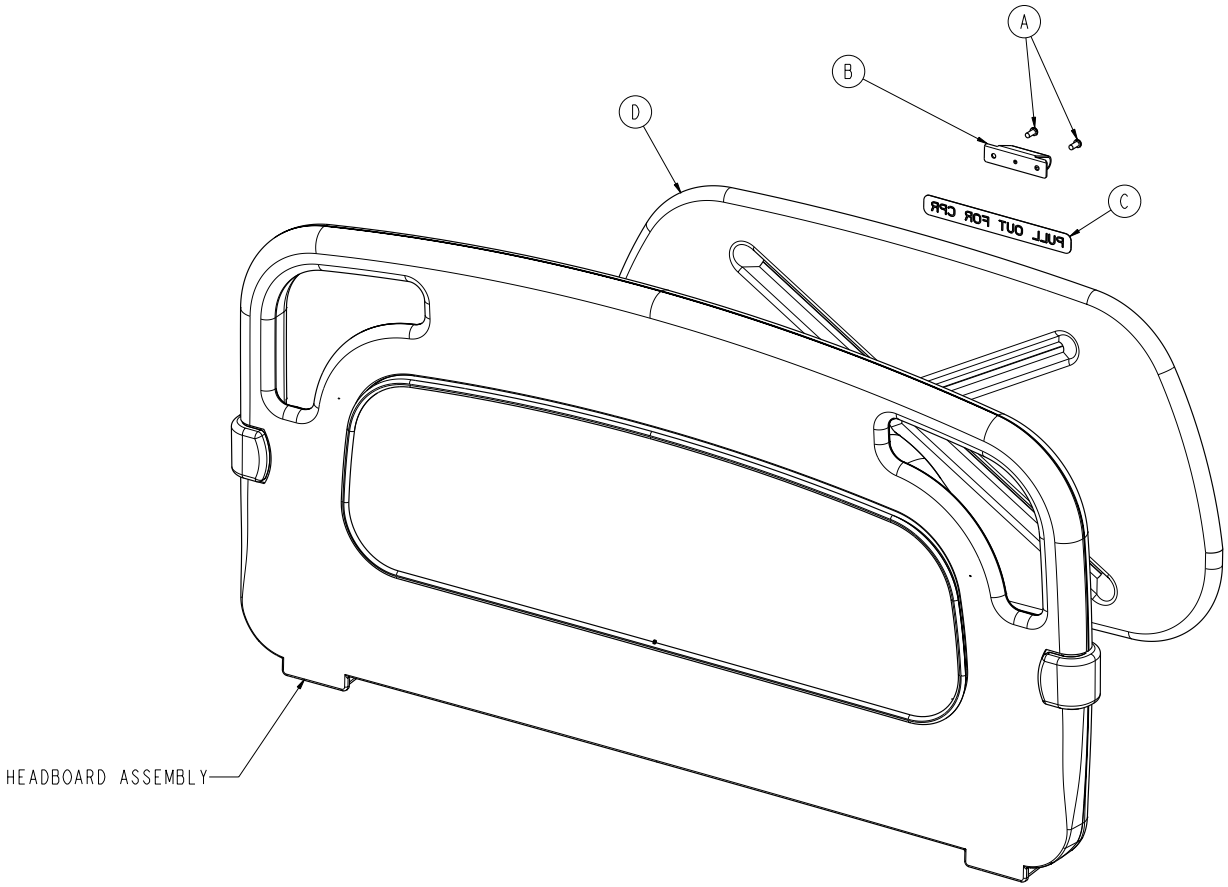

Item	Part No.	Part Name	Qty.
A	0023-088-000	Pan Head Tapping Screw	2
B	3006-526-002	CPR Headboard Clip	1
C	3006-526-003	CPR Board Label	1
D	3006-626-001	CPR Board	1

Return To Table of Contents

Removable I.V. Pole and Mounting Ass'y - 3001-338-010

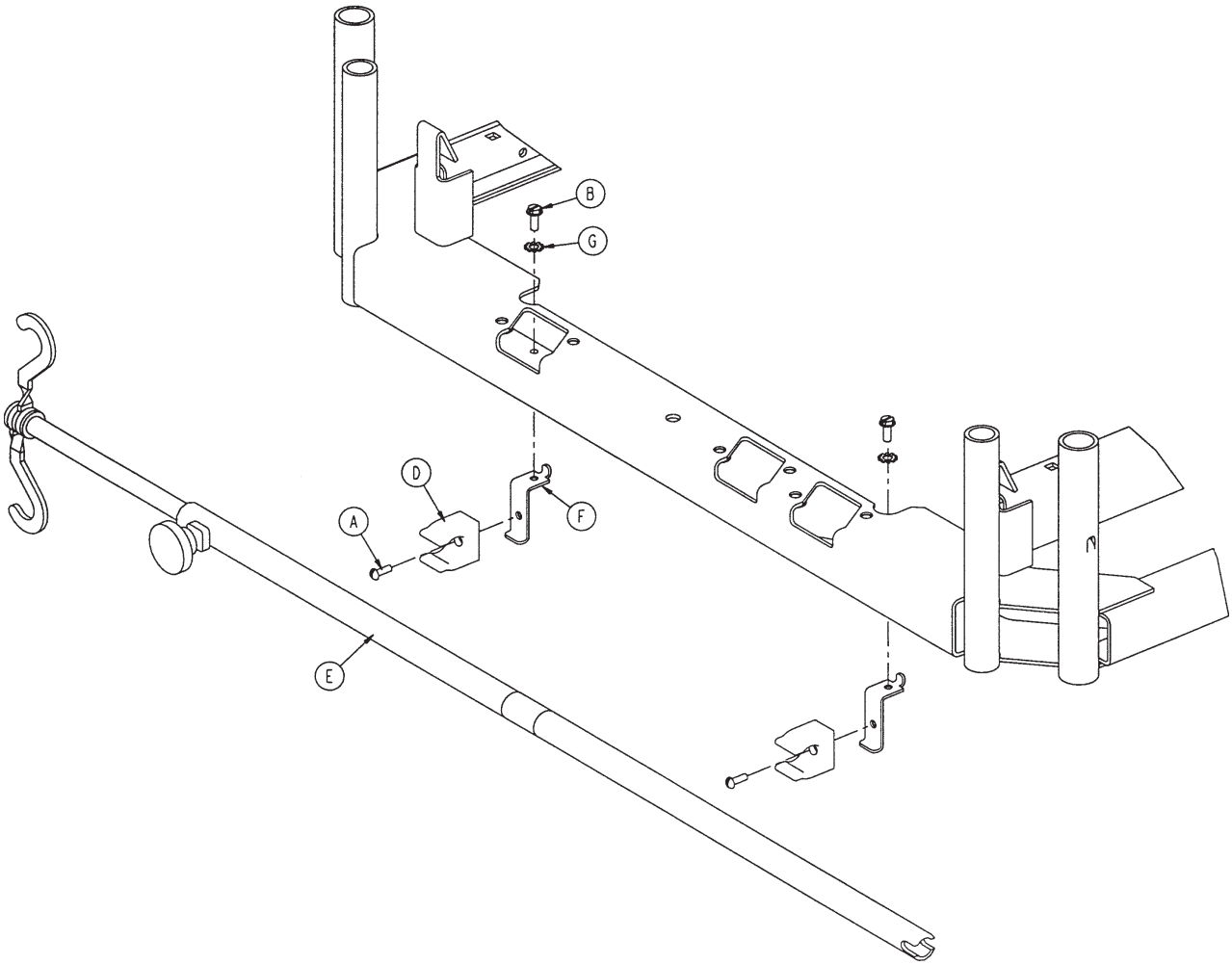

Item	Part No.	Part Name	Qty.
A	0002-031-000	Round Head Screw	2
B	0003-124-000	Hex Washer Head Screw	2
D	0958-001-224	I.V. Clip	2
E	3000-300-080	I.V. Pole Assembly	1
F	3001-300-087	Mounting Bracket	2
G	0013-018-000	External Tooth Lock Washer	2

Return To Table of Contents

Removable I.V. Pole Assembly - 3000-300-080

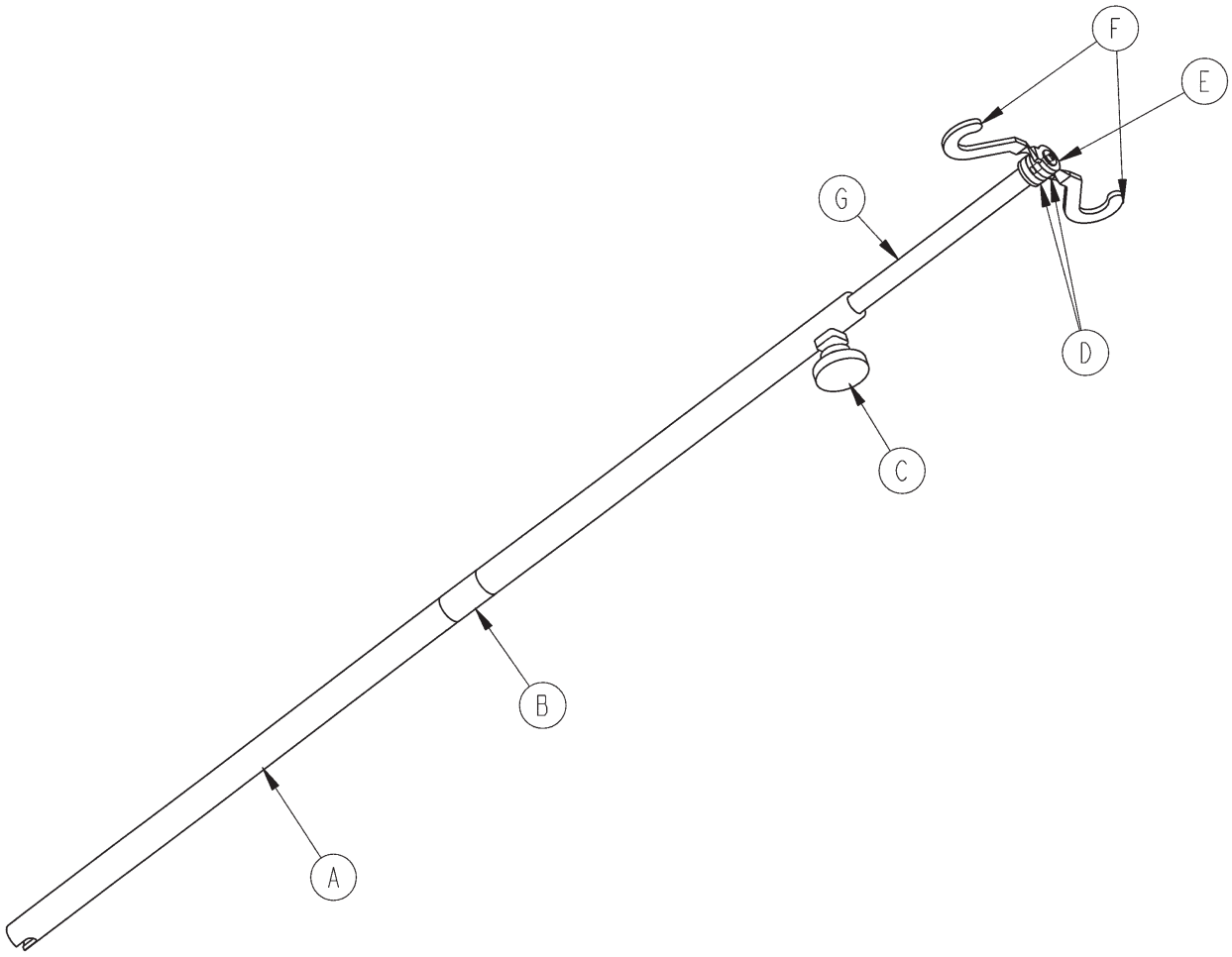

Item	Part No.	Part Name	Qty.
A	3000-300-081	Outer Tube	1
B	3000-300-089	Label	1
C	0024-050-000	Fluted Knob	1
D	0052-017-000	Spacer	2
E	0007-040-000	Phillips Truss Head Screw	1
F	1010-059-016	I.V. Hook	2
G	3000-300-085	Inner Tube Assembly	1

Return To Table of Contents

2-Stage I.V. Pole Assembly - 2035-112-000

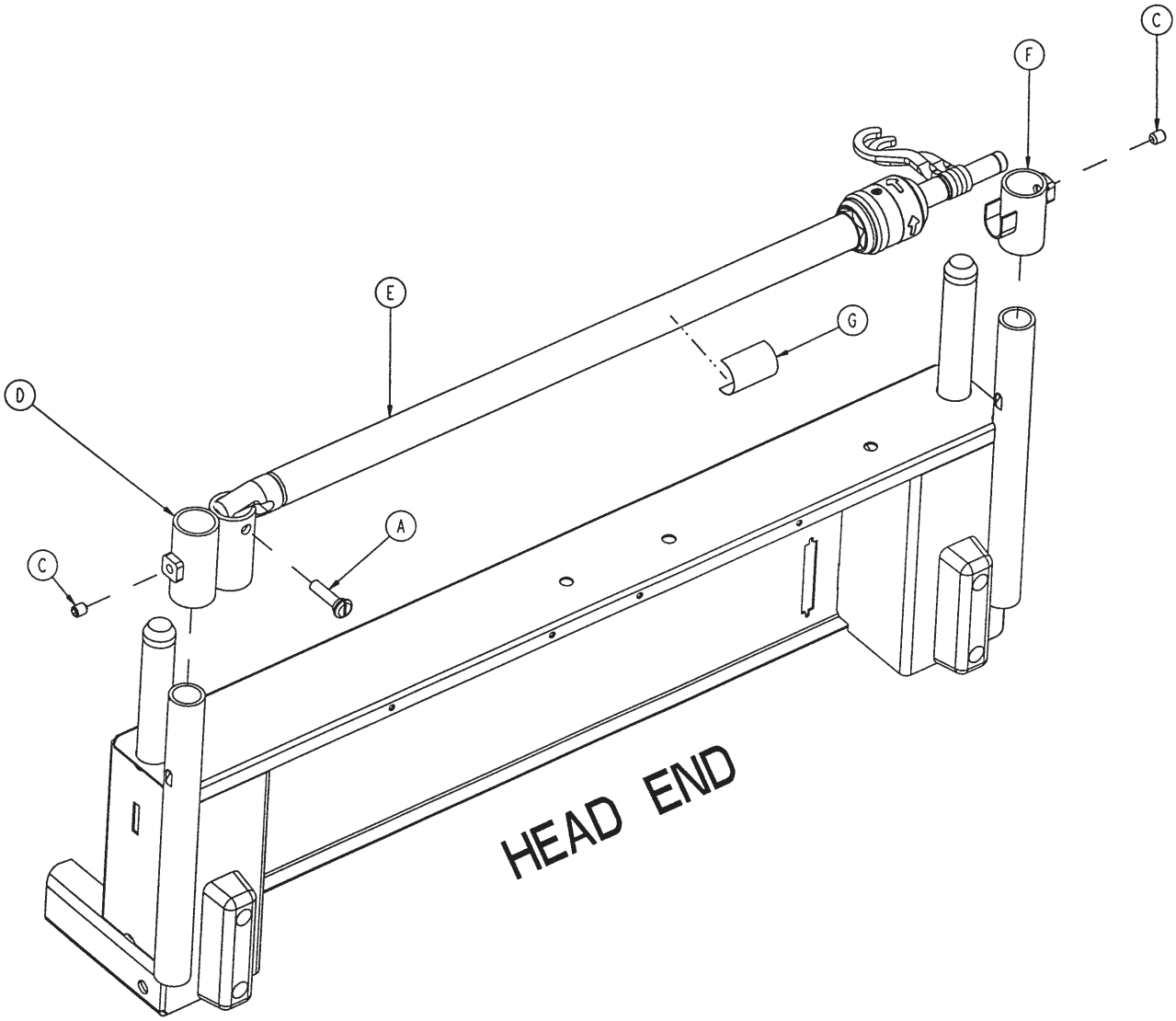

Item	Part No.	Part Name	Qty.
A	1015-024-035	Retaining Pin	1
C	0021-140-000	Set Screw	2
D	2035-112-001	I.V. Receptacle, HE, Left	1
E	2035-112-010	I.V. Pole Ass'y, HE, Left	1
F	3000-311-016	I.V. Rest	1
G	2035-112-110	Specification Label	1

Return To Table of Contents

Dual Head End I.V. Pole Assembly - 2035-113-000

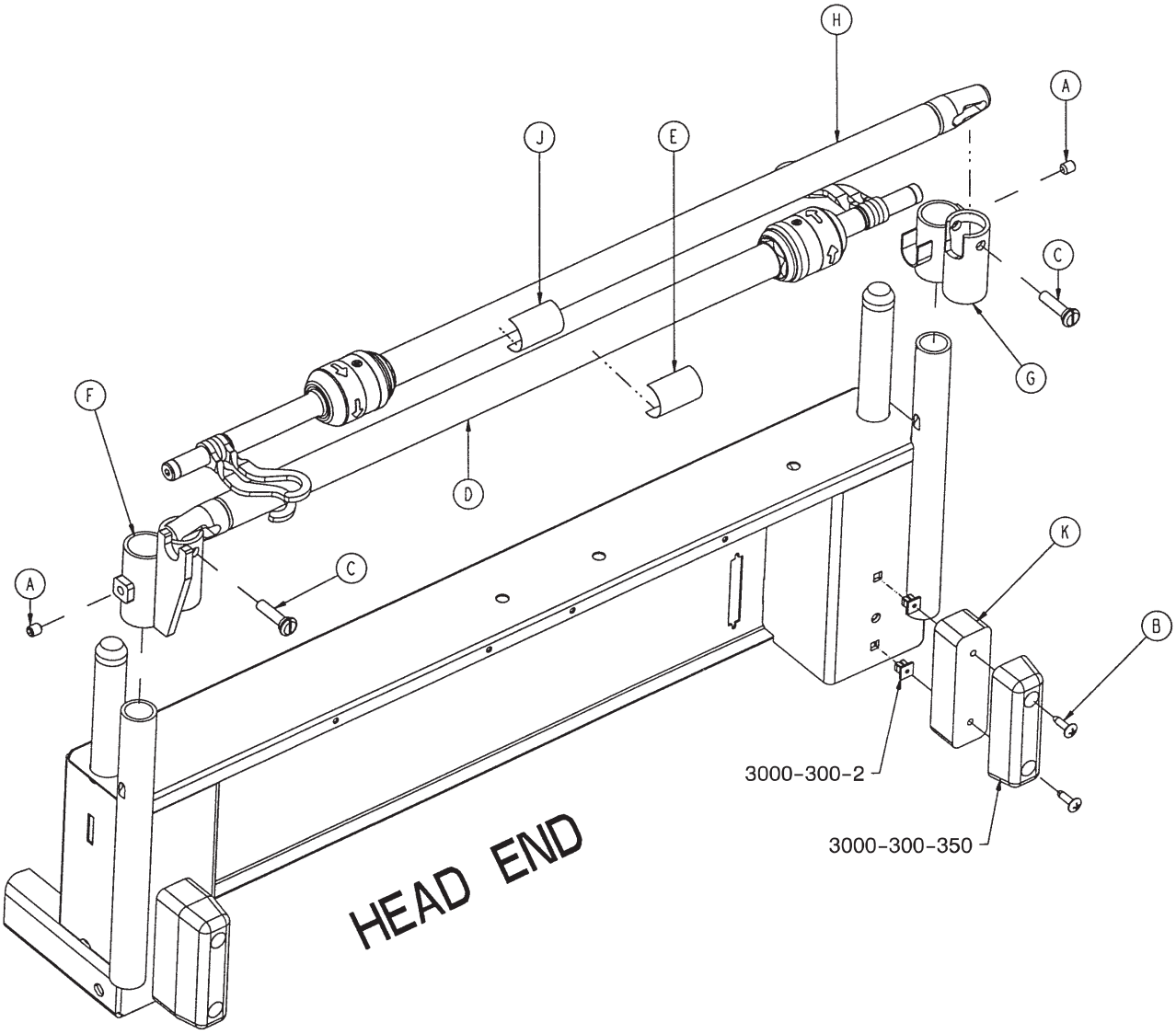

Item	Part No.	Part Name	Qty.
A	0021-140-000	Set Screw	2
B	0023-277-000	Truss Head Screw	4
C	1015-024-035	Retaining Pin	2
D	2035-112-010	I.V. Pole Ass'y, HE, Left	1
E	2035-112-110	Specification Label	1
F	2035-113-002	I.V. Receptacle, Dual HE, Left	1
G	2035-113-001	I.V. Receptacle, Dual HE, Right	1
H	2035-113-011	I.V. Pole Assembly, HE, Right	1
J	2035-113-111	Specification Label	1
K	2035-113-006	Head End Bumper Spacer	2

Return To Table of Contents

Dual Head End I.V. Pole Assembly - 2040-110-003

FOR Zoom® OPTION ONLY

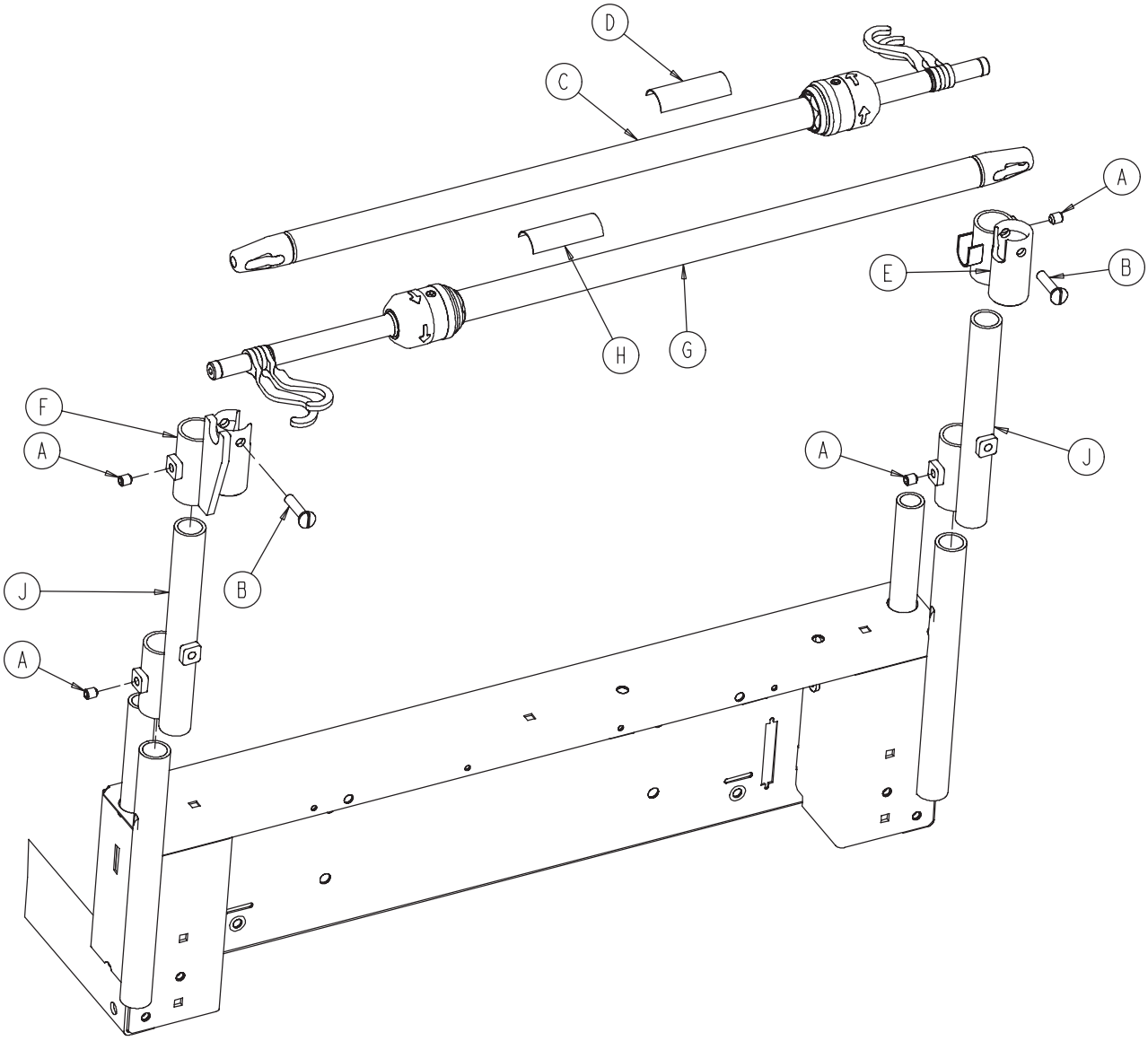

Item	Part No.	Part Name	Qty.
A	0021-140-000	Set Screw	4
B	1015-024-035	Retaining Pin	2
C	2035-112-010	I.V. Pole Assembly, Left	1
D	2035-11-110	Specification Label	1
E	2035-113-002	I.V. Receptacle, Dual HE, Right	1
F	2035-113-001	I.V. Receptacle, Dual HE, Left	1
G	2035-113-011	I.V. Pole Assembly, Right	1
H	2035-113-111	Specification Label	1
J	2040-110-002	I.V. Pole Extension	2

Return To Table of Contents

2-Stage I.V. Pole - 2035-112-010 & 2035-113-011

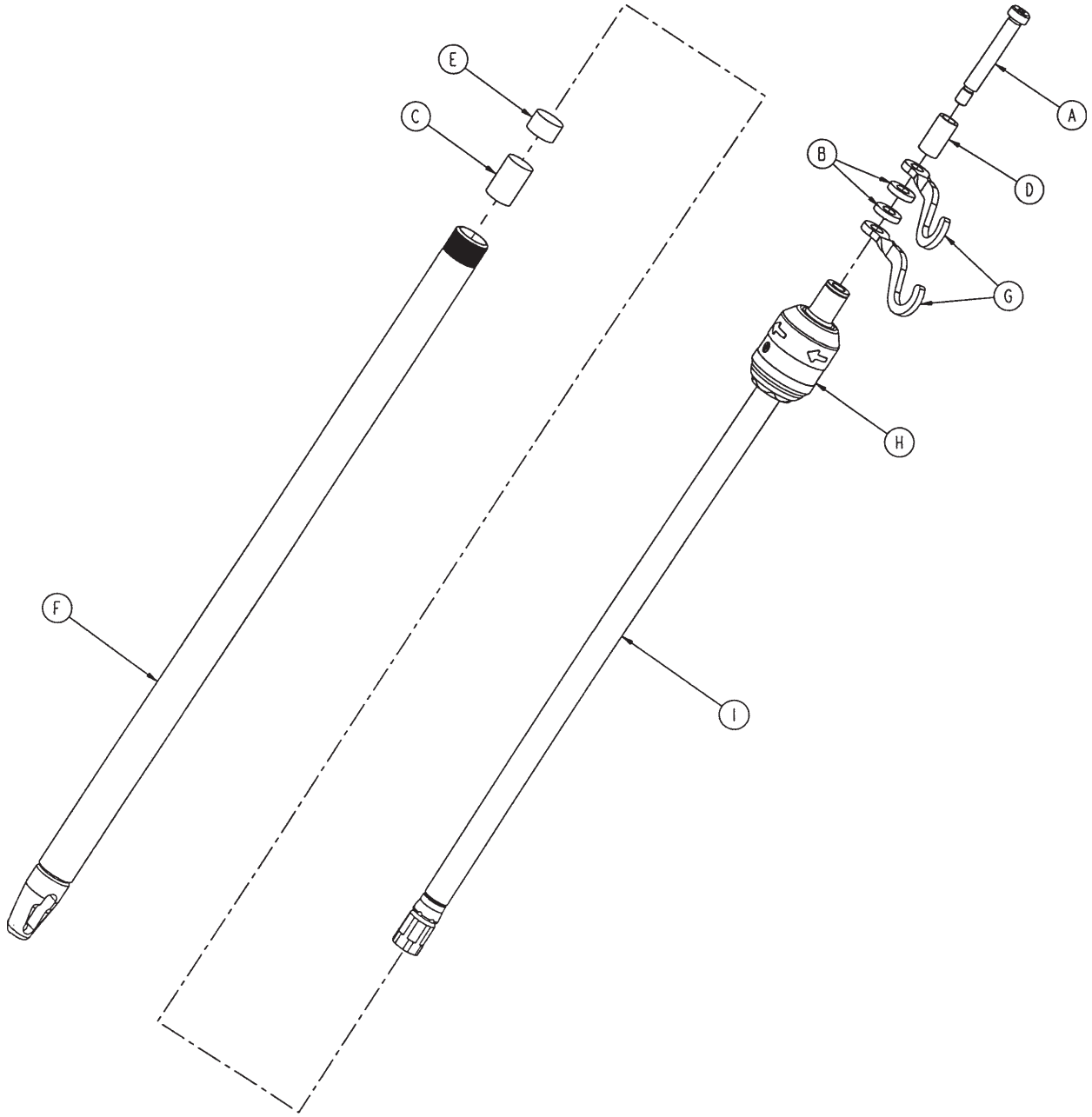

Left Side - 2035-112-010

Item	Part No.	Part Name	Qty.
A	0008-031-000	Socket Head Shoulder Screw	1
B	0052-017-000	Washer	2
C	0052-310-000	Spacer	1
D	0926-400-162	Spacer	1
E	1001-259-013	Dampener	1
F	1001-259-032	Base Tube Weldment	1
G	1010-259-016	I.V. Hook	2
H	0785-035-103	I.V. Pole Latch	1
I	1211-110-029	2nd Stage Assembly	1

Right Side - 2035-113-011

Item	Part No.	Part Name	Qty.
A	0008-031-000	Socket Head Shoulder Screw	1
B	0052-017-000	Washer	2
C	0052-311-000	Spacer	1
D	0926-400-162	Spacer	1
E	1001-259-013	Dampener	1
F	1001-259-032	Base Tube Weldment	1
G	1010-259-016	I.V. Hook	2
H	0785-035-103	I.V. Pole Latch	1
I	1211-110-029	2nd Stage Assembly	1

Return To Table of Contents

I.V. Pole Latch Assembly - 0785-035-103

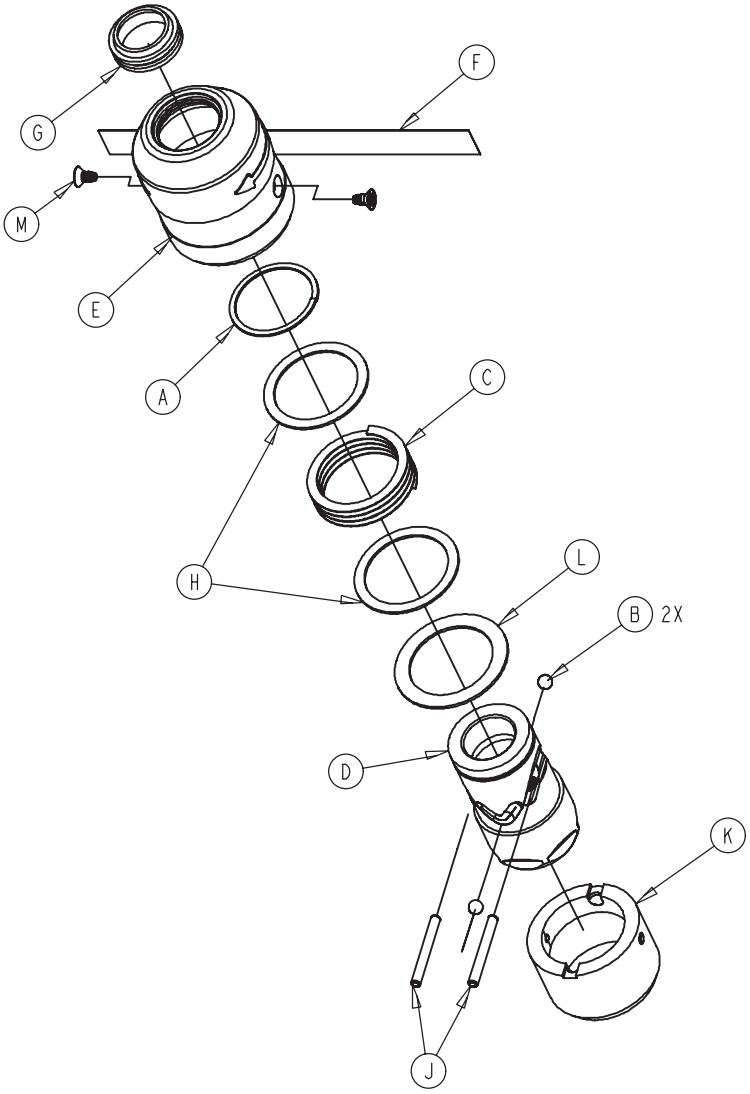

Item	Part No.	Part Name	Qty.
A	0028-167-000	Retaining Ring	1
B	0031-004-000	Steel Ball	2
C	0038-392-000	Wave Spring	1
D	0785-035-023	I.V. Latch ID Housing	1
E	0785-035-024	I.V. Latch OD Housing	1
F	0785-035-029	I.V. Release Label	2
G	1211-011-018	I.V. Latch Seal	2
H	1211-110-020	Washer	2
J	1211-110-021	I.V. Latch Locking Pin	2
K	1211-110-022	I.V. Latch Guide	1
L	1211-110-035	Washer	1
M	1211-110-036	Self-Tapping Screw	2

Return To Table of Contents

Defibrillator Tray Assembly - 3006-120-004

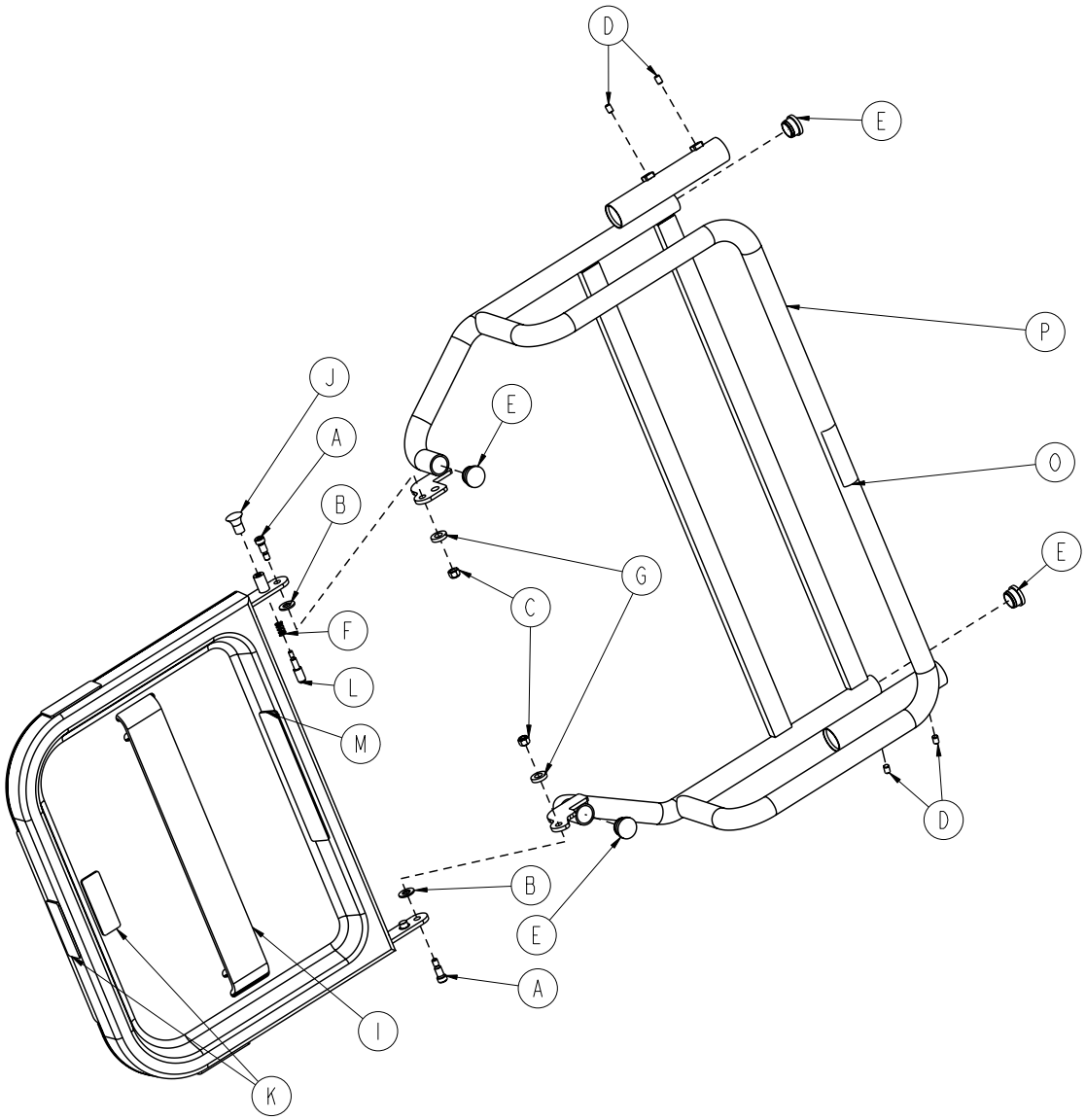

Item	Part No.	Part Name	Qty.
A	0008-049-000	Socket Head Shoulder Bolt	2
B	0014-020-000	Thrust Washer	1
C	0016-028-000	Fiberlock Nut	2
D	0021-017-000	Set Screw	4
E	0037-214-000	Hole Plug	4
F	0038-133-000	Spring	1
G	0052-017-000	Spacer	2
H	1010-050-019	“Push/Pull” Label	1
I	1010-050-021	Long Strap	1
J	1010-050-050	Knob	1
K	1010-050-057	Maximum Weight Label	4
L	1010-050-242	Lock Pin	1
M	2025-120-005	Equipment Label	1
N	3006-120-018	Tray Assembly	1
O	2040-090-001	Warning Label - Accessories	1
P	3006-120-003	Pivot Weldment Frame	1

Return To Table of Contents

90° Power Cord - 3001-334-010

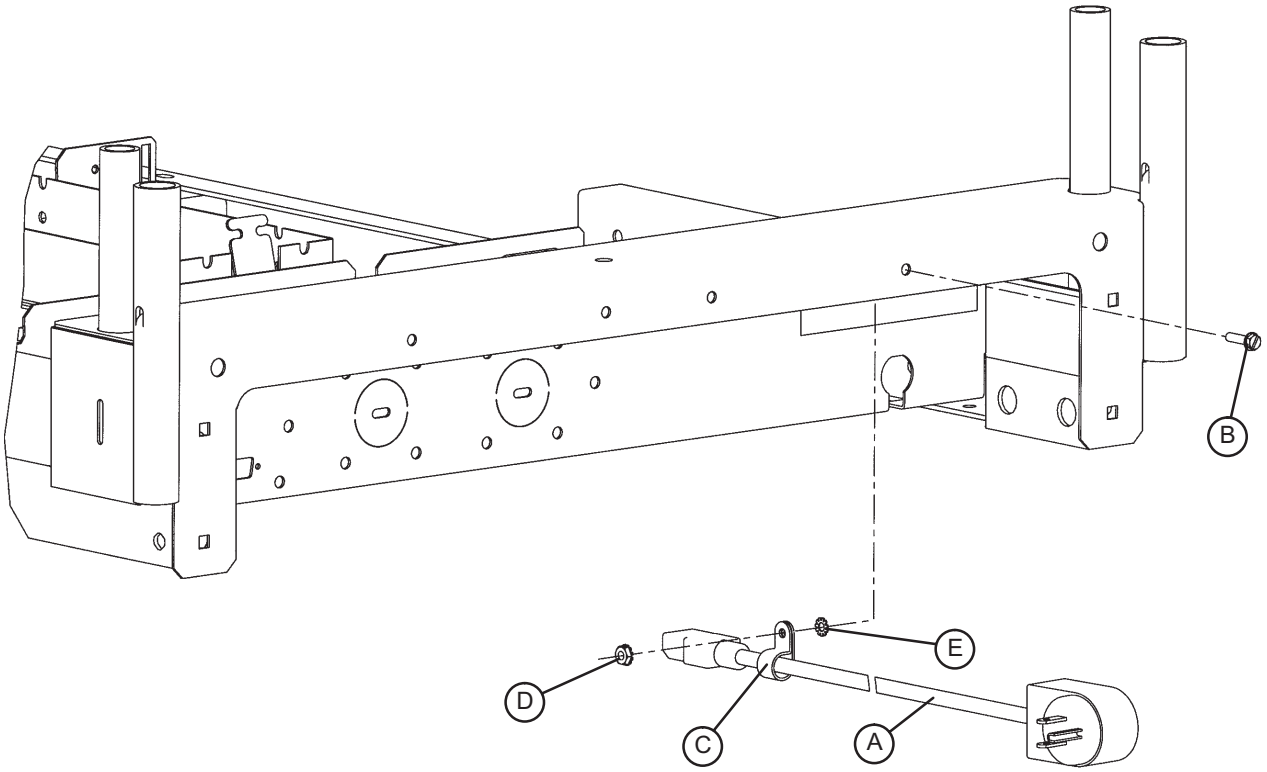

Item	Part No.	Part Name	Qty.
A	3001-334-860	90° Power Cord (12 O'Clock)	1
	3001-334-861	90° Power Cord (9 O'Clock)	1
	3001-334-862	90° Power Cord (6 O'Clock)	1
	3001-334-863	90° Power Cord (3 O'Clock)	1
B	0003-132-000	Hex Washer Head Screw	1
C	0034-022-000	Cable Clamp	1
D	0016-041-000	Kep Nut	1
E	0013-018-000	External Tooth Lock Washer	1

Return To Table of Contents

Upright Oxygen Bottle Holder Assembly - 3006-150-000

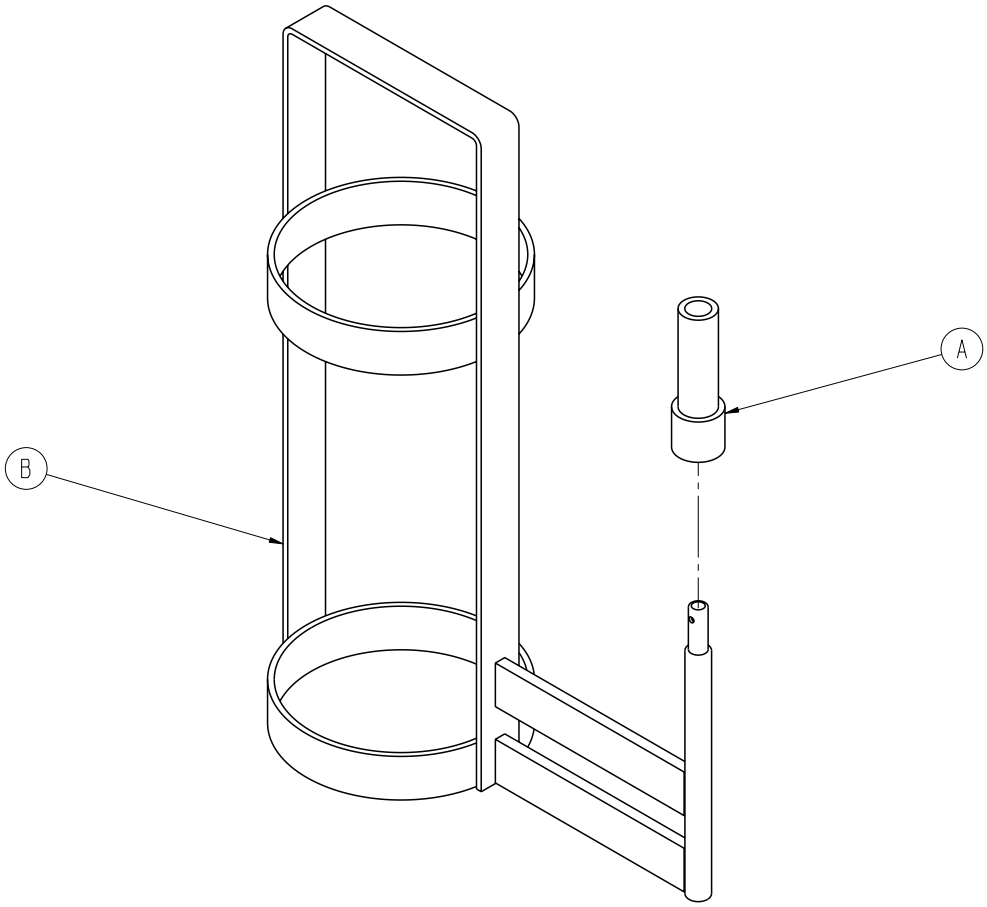

Item	Part No.	Part Name	Qty.
A	2025-150-001	Bottle Holder Adapter	1
B	3006-046-001	Upright Bottle Holder	1

Return To Table of Contents

Accessory Adapter Frame - 3006-333-000

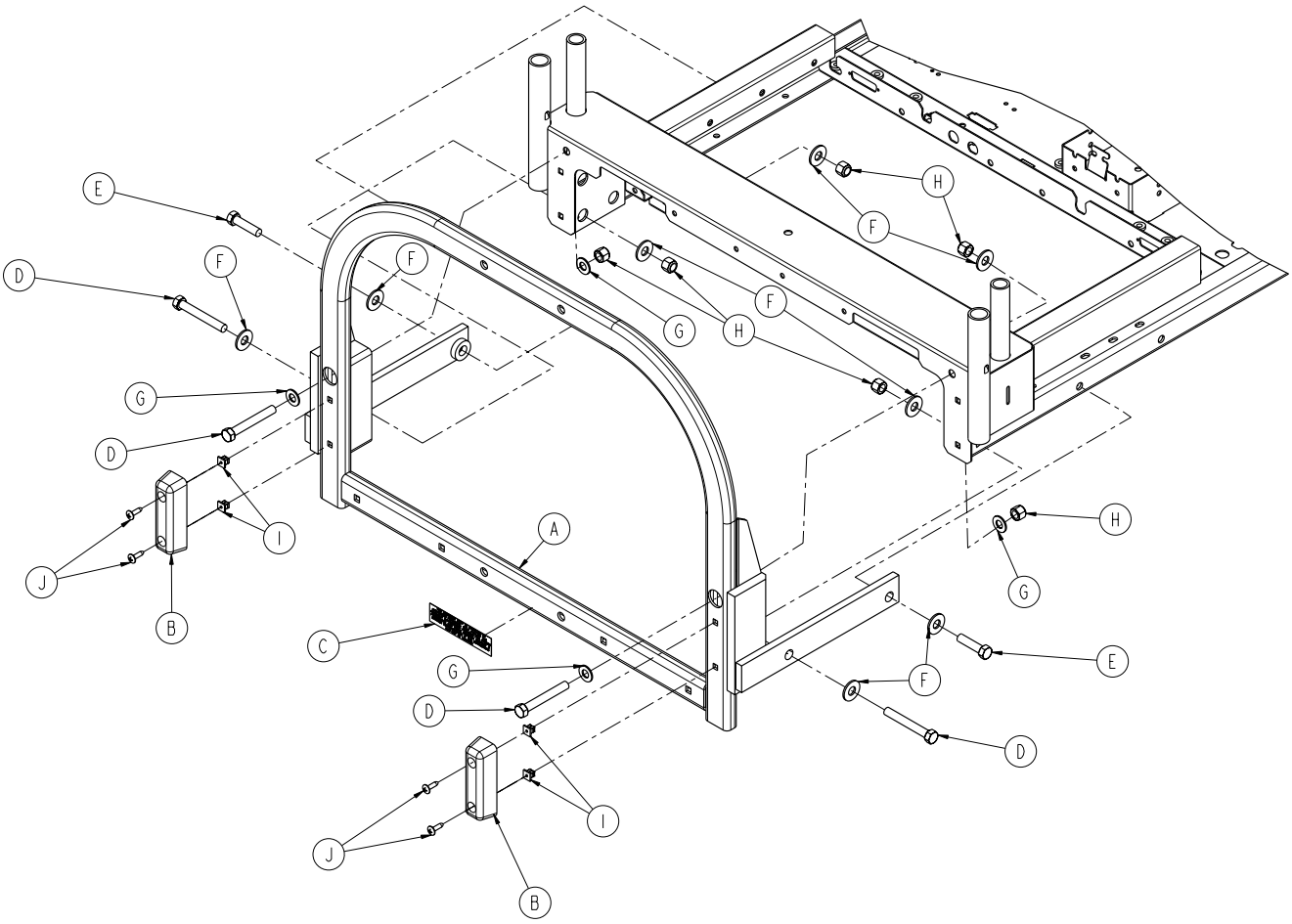

Item	Part No.	Part Name	Qty.
A	3006-334-010	Adapter Frame Assembly	1
B	3000-300-350	Head End Bumper	2
C	3000-333-015	Accessory Adapter Label	1
D	0003-031-000	Hex Head Cap Screw	4
E	0003-025-000	Hex Head Cap Screw	2
F	0011-361-000	3/8” Flat Washer	4
G	0011-004-000	Flat Washer	4
H	0016-035-000	Nylock Nut	6
I	3000-300-002	Plastic Clip Nut	4
J	0023-080-000	#10 x 3/4” Truss Head Screw	4

Return To Table of Contents

Patient Helper Assembly - 3006-335-000

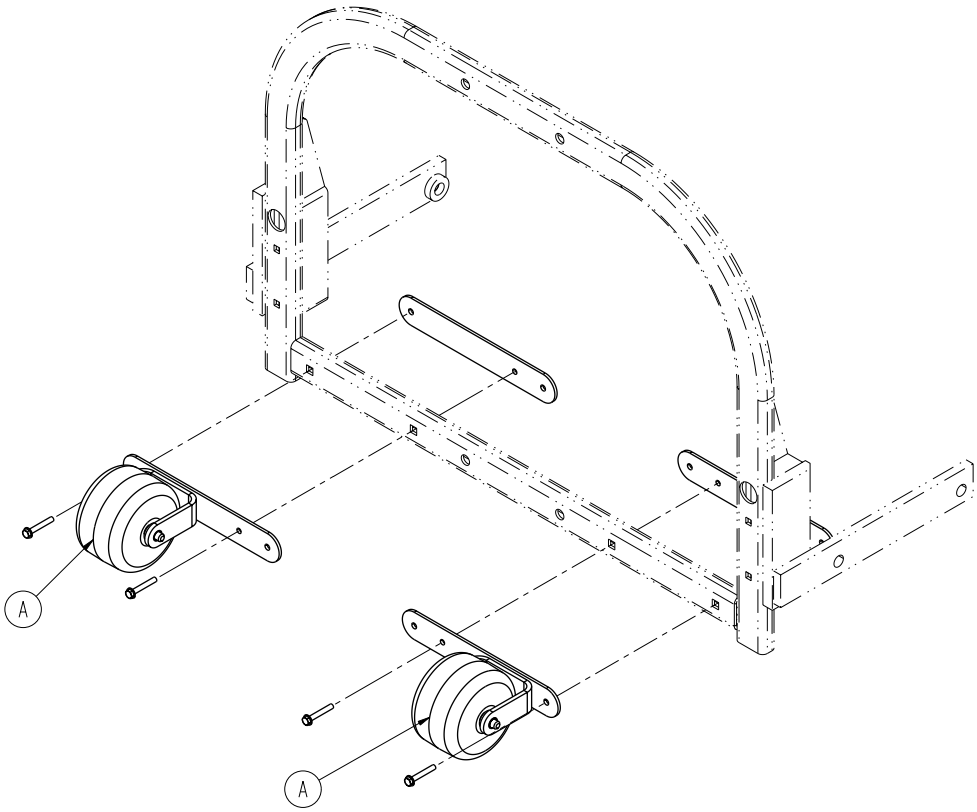

Item	Part No.	Part Name	Qty.
A	3006-335-005	Patient Helper Roller Assembly	2

Return To Table of Contents

Patient Helper Roller Assembly - 3006-335-005

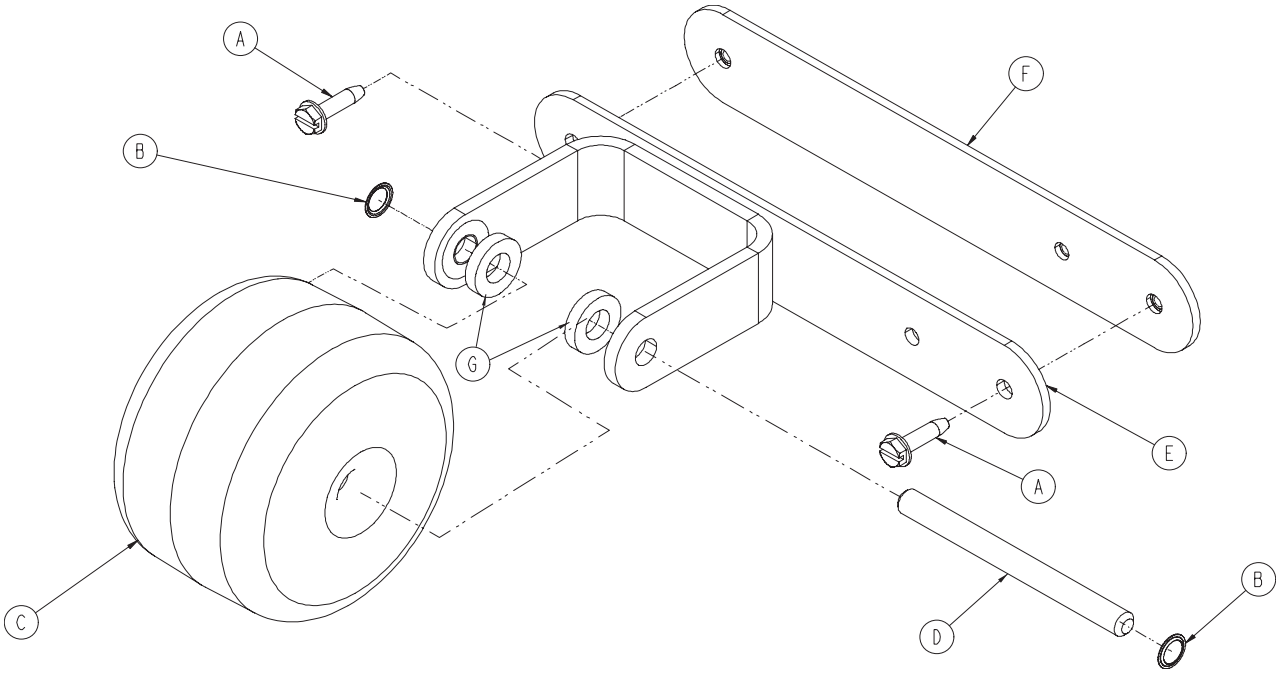

Item	Part No.	Part Name	Qty.
A	0003-369-000	Hex Washer Head Screw	2
B	0052-727-000	Grooveless Retainer Ring	2
C	3000-335-011	Roller Bumper	1
D	3000-335-012	Roller Shaft	1
E	3006-336-020	Roller Bracket	1
F	3006-336-025	Roller Mounting Plate	1
G	0052-017-000	Plastic Washer	2

Return To Table of Contents

Litter Roller Assembly - 3006-345-000

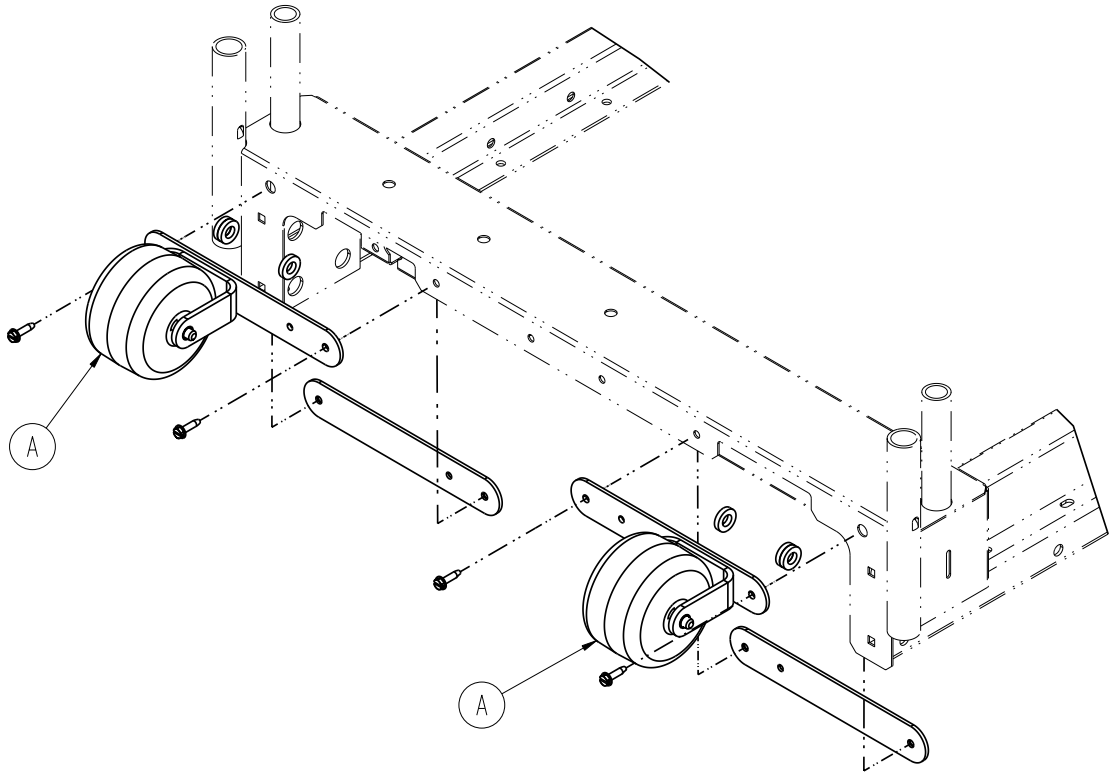

Item	Part No.	Part Name	Qty.
A	3006-345-005	Roller Assembly	2

Return To Table of Contents

Roller Assembly - 3006-345-005

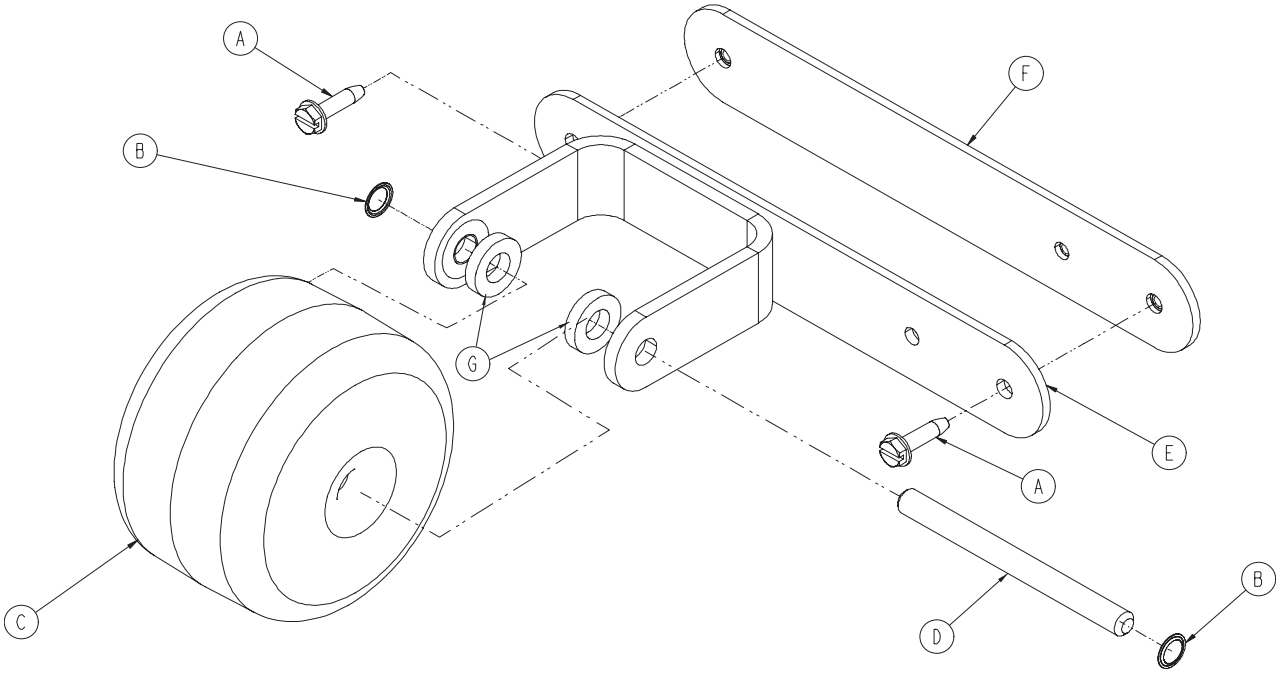

Item	Part No.	Part Name	Qty.
A	0003-225-000	Hex Washer Head Screw	2
B	0052-727-000	Grooveless Retainer Ring	2
C	3000-335-011	Roller Bumper	1
D	3000-335-012	Roller Shaft	1
E	3006-336-020	Roller Bracket	1
F	3006-336-025	Roller Mounting Plate	1
G	0052-017-000	Plastic Washer	2

Return To Table of Contents

Bed Extender Assembly - 3006-346-020

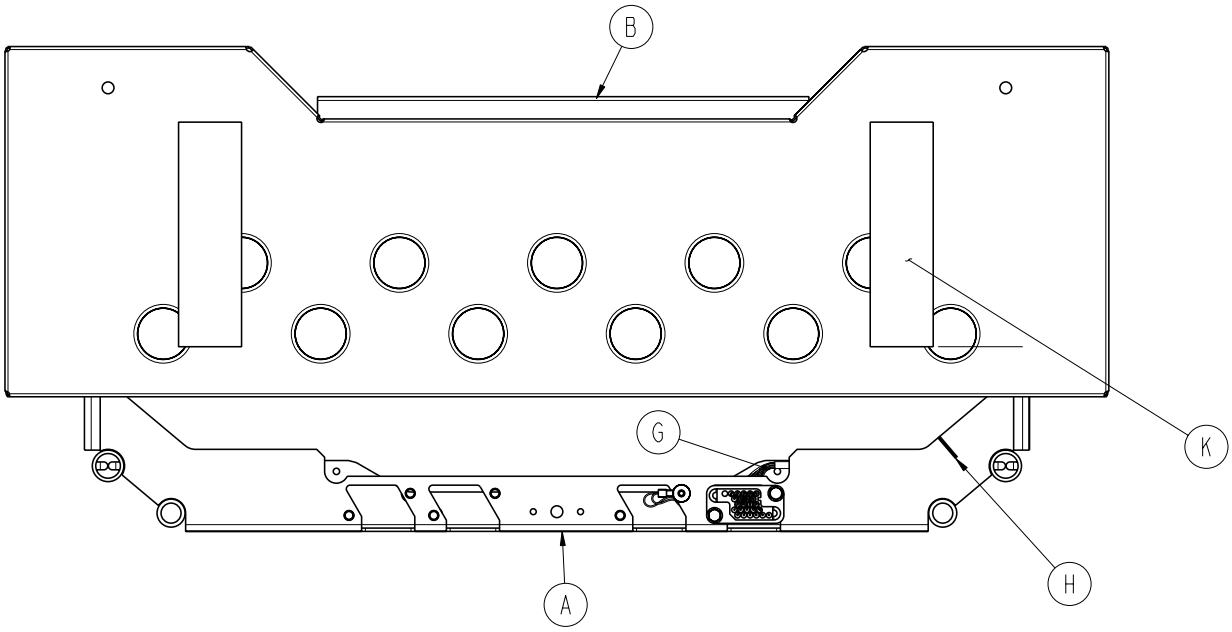

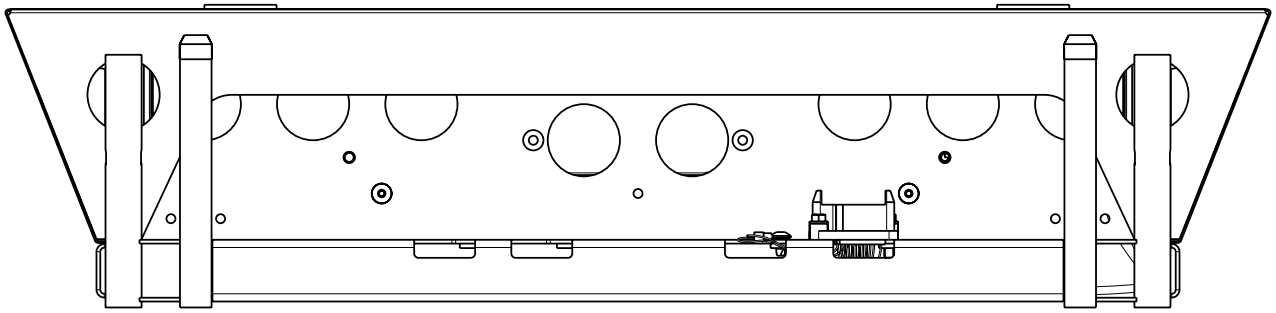

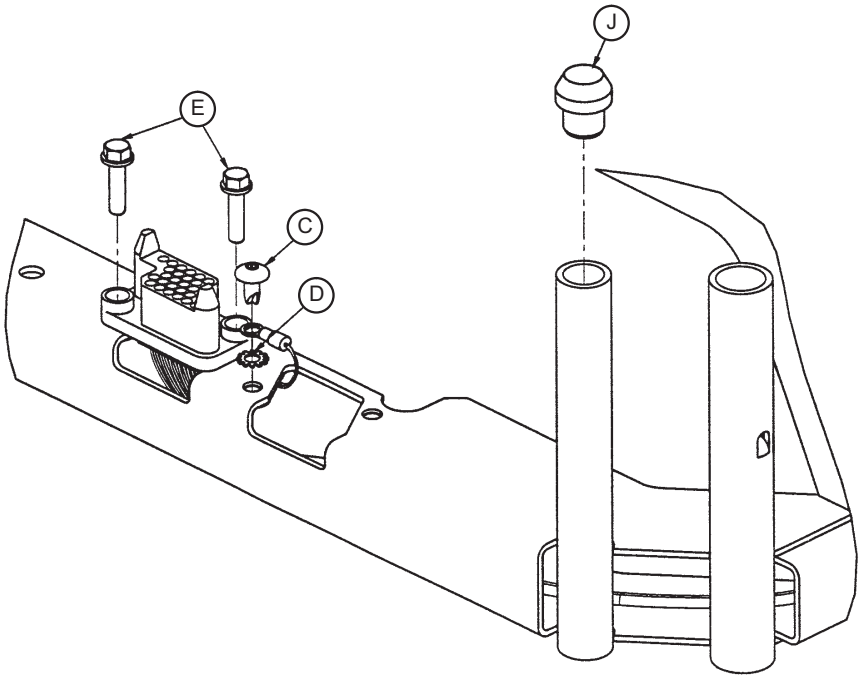

Return To Table of Contents

Bed Extender Assembly - 3006-346-020

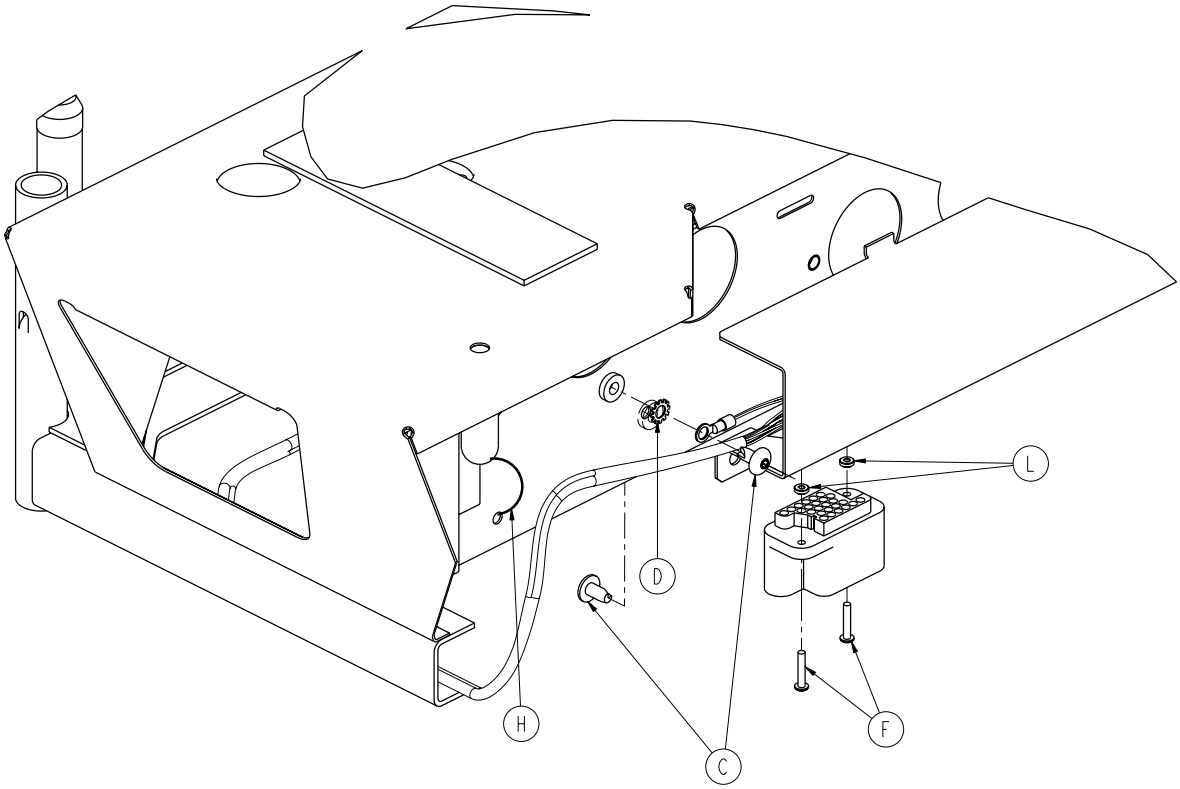

Item	Part No.	Part Name	Qty.
A	3001-318-050	Bed Extender Weldment	1
B	3001-318-031	Connector Mounting Bracket	1
C	0007-052-000	Truss Head Screw	4
D	0013-010-000	External Tooth Lock Washer	2
E	3001-200-228	Mounting StandOff	2
F	0050-039-000	Pan Head Machine Screw	2
G	3000-318-801	Bed Extender Cable	1
H	3000-300-114	Cable Tie	2
J	3000-300-349	Cap	2
K	7900-001-102	Velcro® Adhesive Pile	2
L	0011-146-000	Washer	4

Return To Table of Contents

Bed Extender Mattress - 3000-318-050

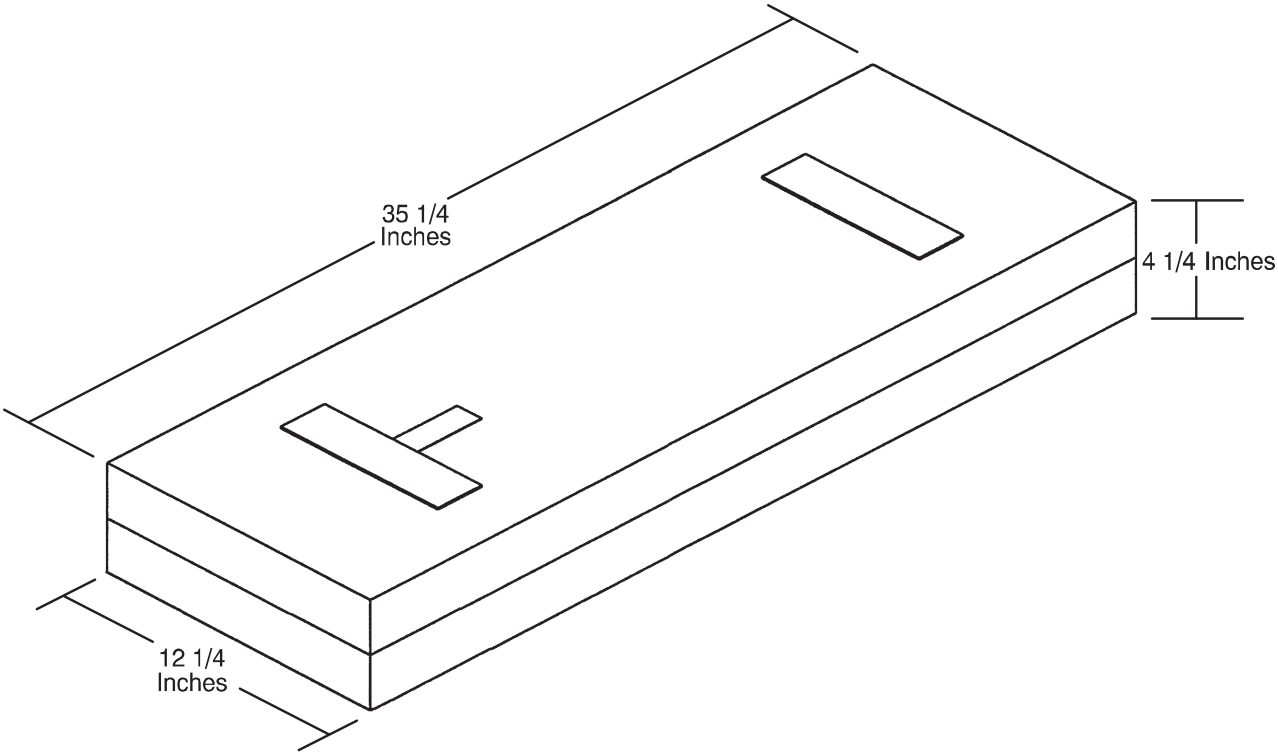

Return To Table of Contents

Traction Socket Extensions

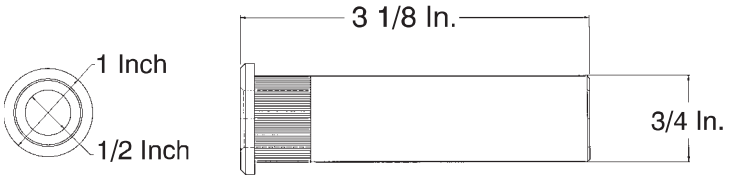

For Reference Only: 3000-337-050

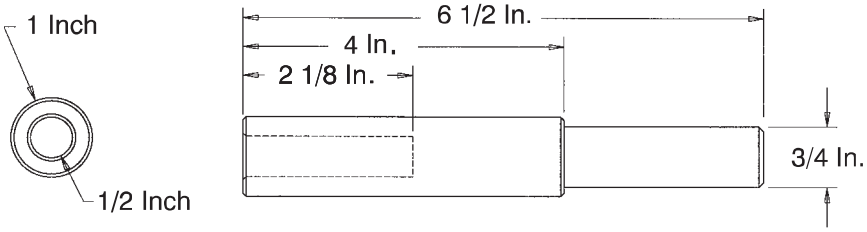

For Reference Only: 3000-337-450

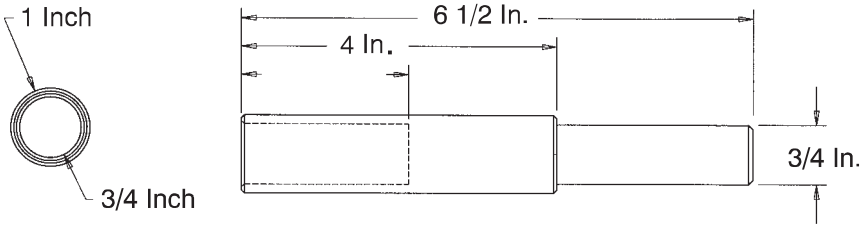

For Reference Only: 3000-337-475

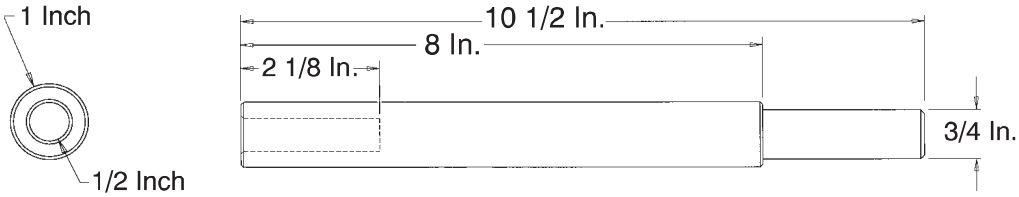

For Reference Only: 3000-337-850

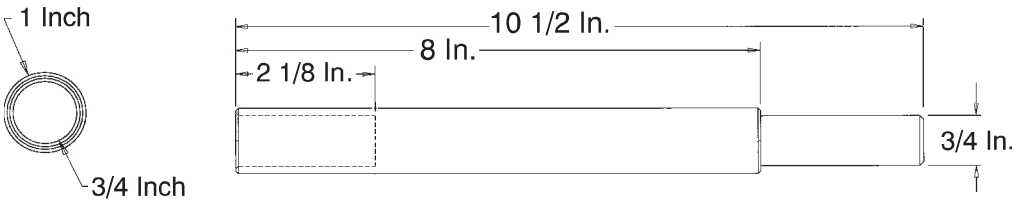

For Reference Only: 3000-337-875

Return To Table of Contents

Recycling Passport

Assembly Part number: 3006-375-895 (Reference Only)

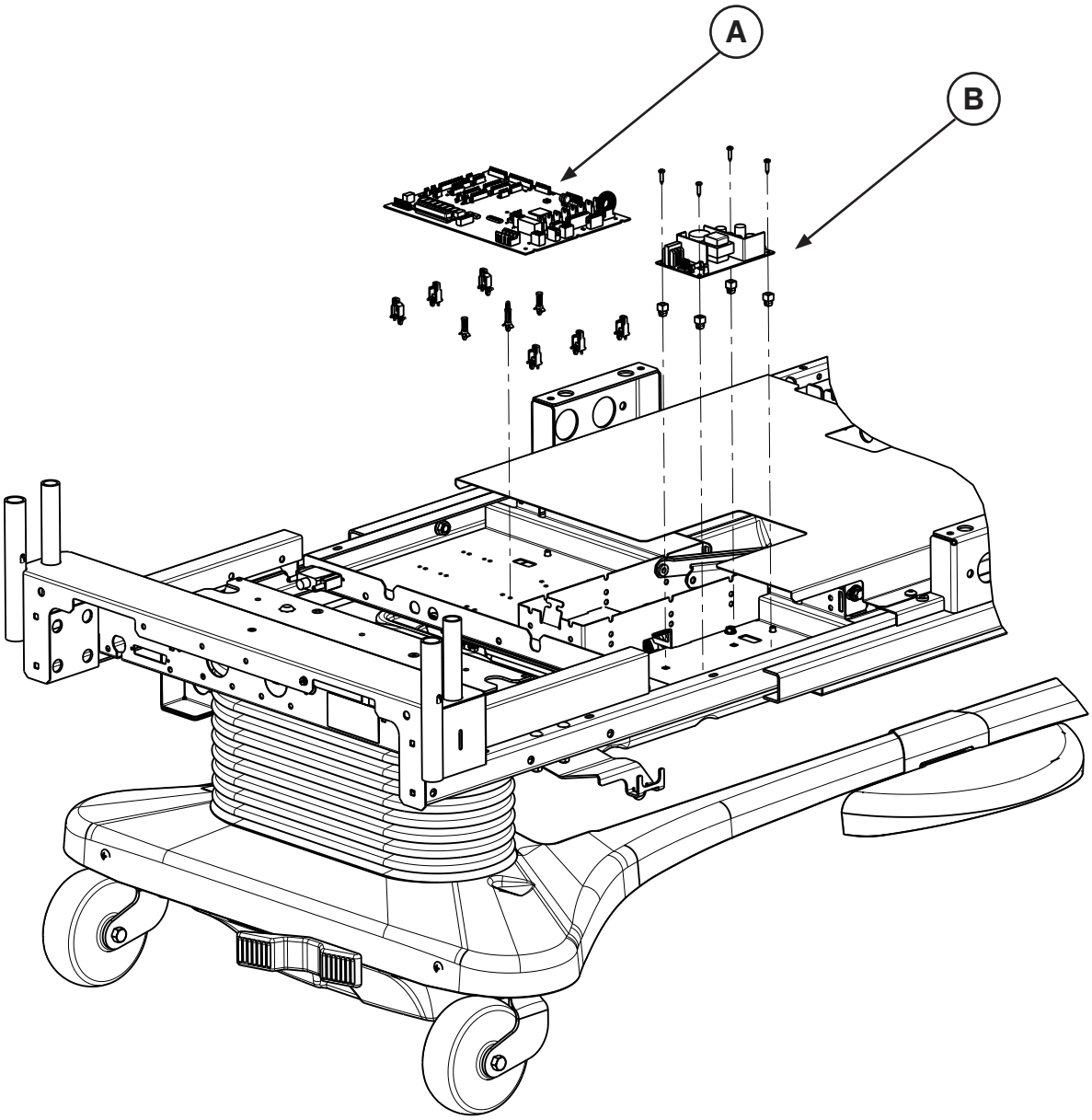

Item	Recycling/Material Code	Important Information	Qty
A	(3006-308-900) CPU Board		1
B	(0059-157-000) Power Supply		1

Return To Table of Contents

Assembly Part number: 3006-400-125 (Reference Only)

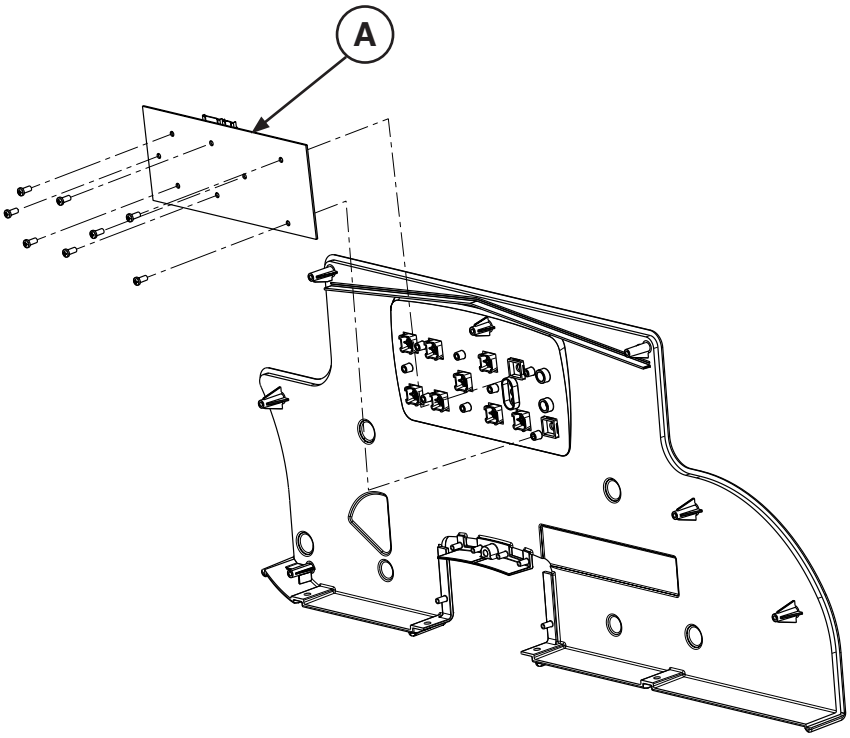

Assembly Part number: 3006-400-225 (Reference Only)

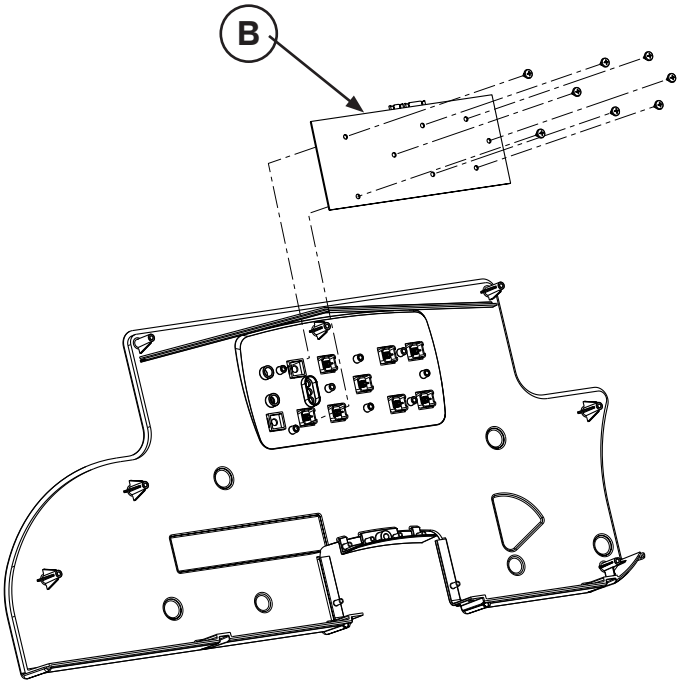

Item	Recycling/Material Code	Important Information	Qty
A	(3006-400-920) Siderail Outer PCB, Left		1
B	(3006-400-910) Siderail Outer PCB, Right		1

Return To Table of Contents

Assembly Part number: 3006-400-130 (Reference Only)

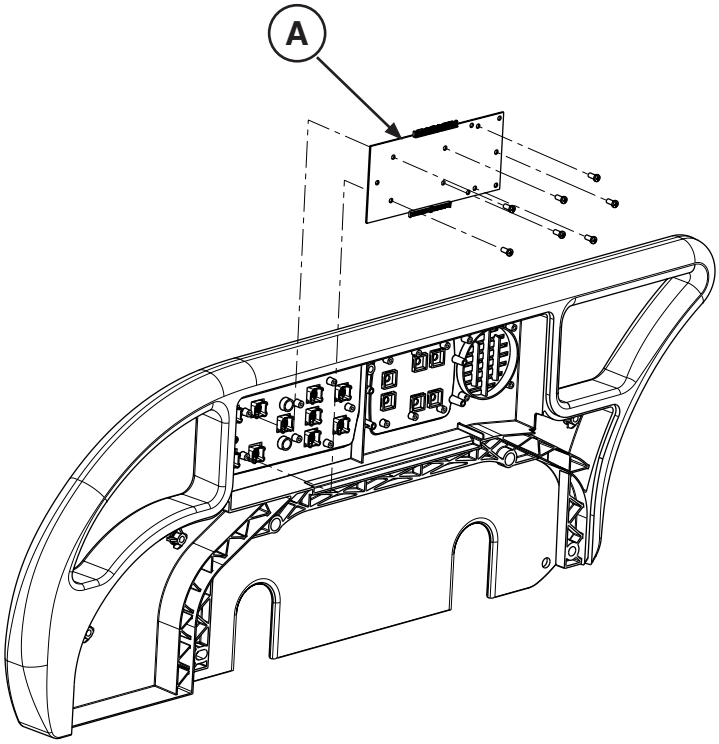

Assembly Part number: 3006-400-230 (Reference Only)

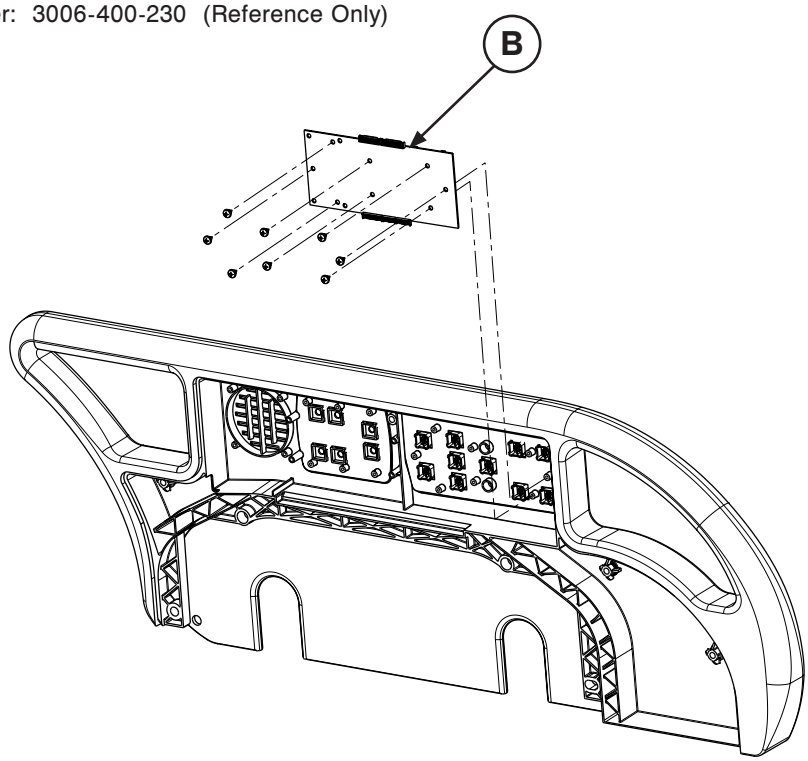

Item	Recycling/Material Code	Important Information	Qty
A	(3006-400-930) Siderail Outer PCB, Left		1
B	(3006-400-930) Siderail Outer PCB, Right		1

Return To Table of Contents

Recycling Passport

Assembly Part number: 3006-303-045 (Reference Only)

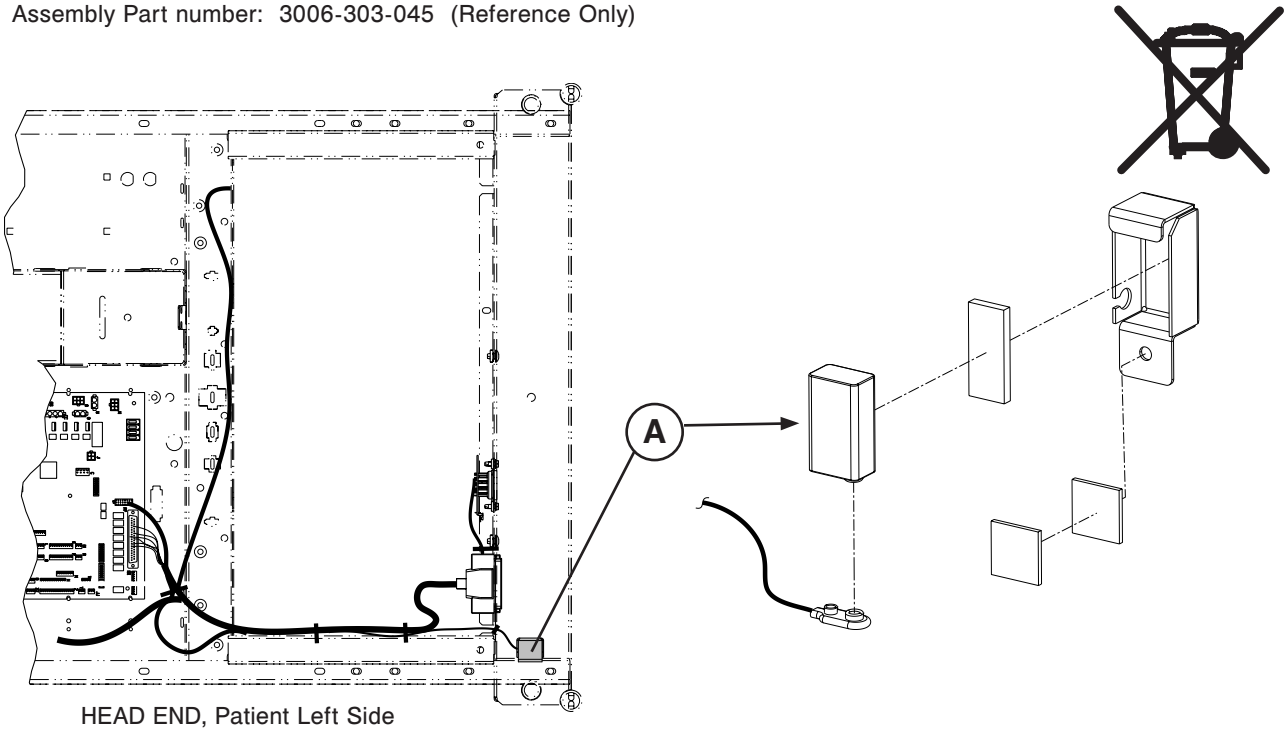

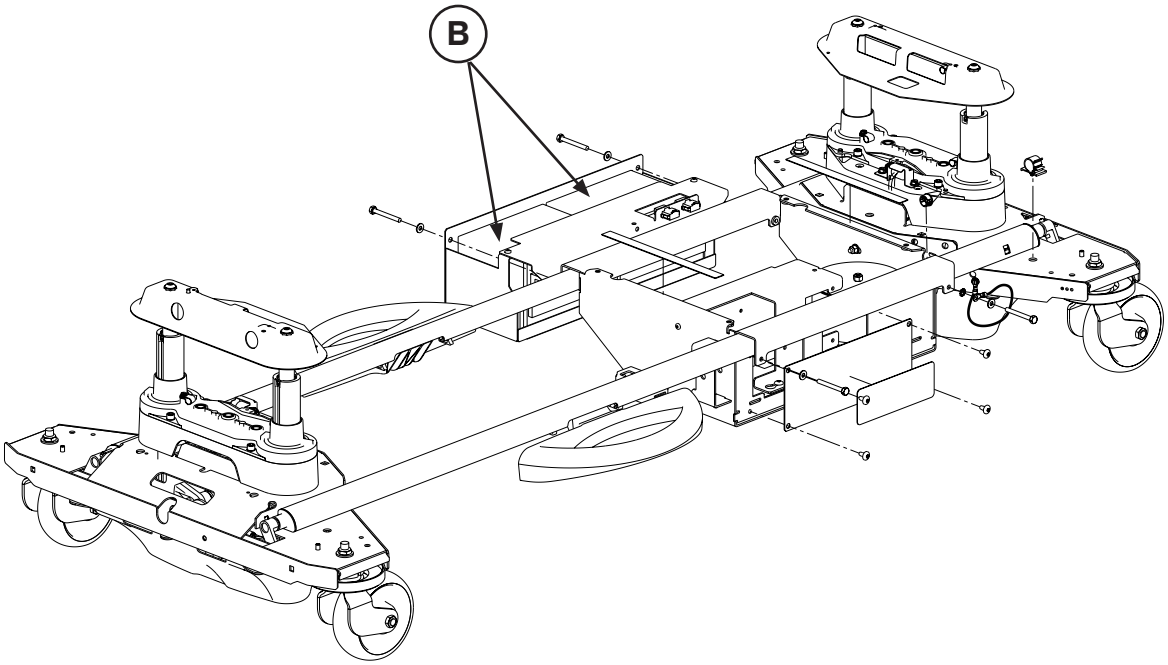

Item	Recycling/Material Code	Important Information	Qty
A	(3006-303-871) Battery 9V		1
B	(2040-001-070) Battery 12V		2

Return To Table of Contents

Assembly Part number: 3001-314-012 (Reference Only)

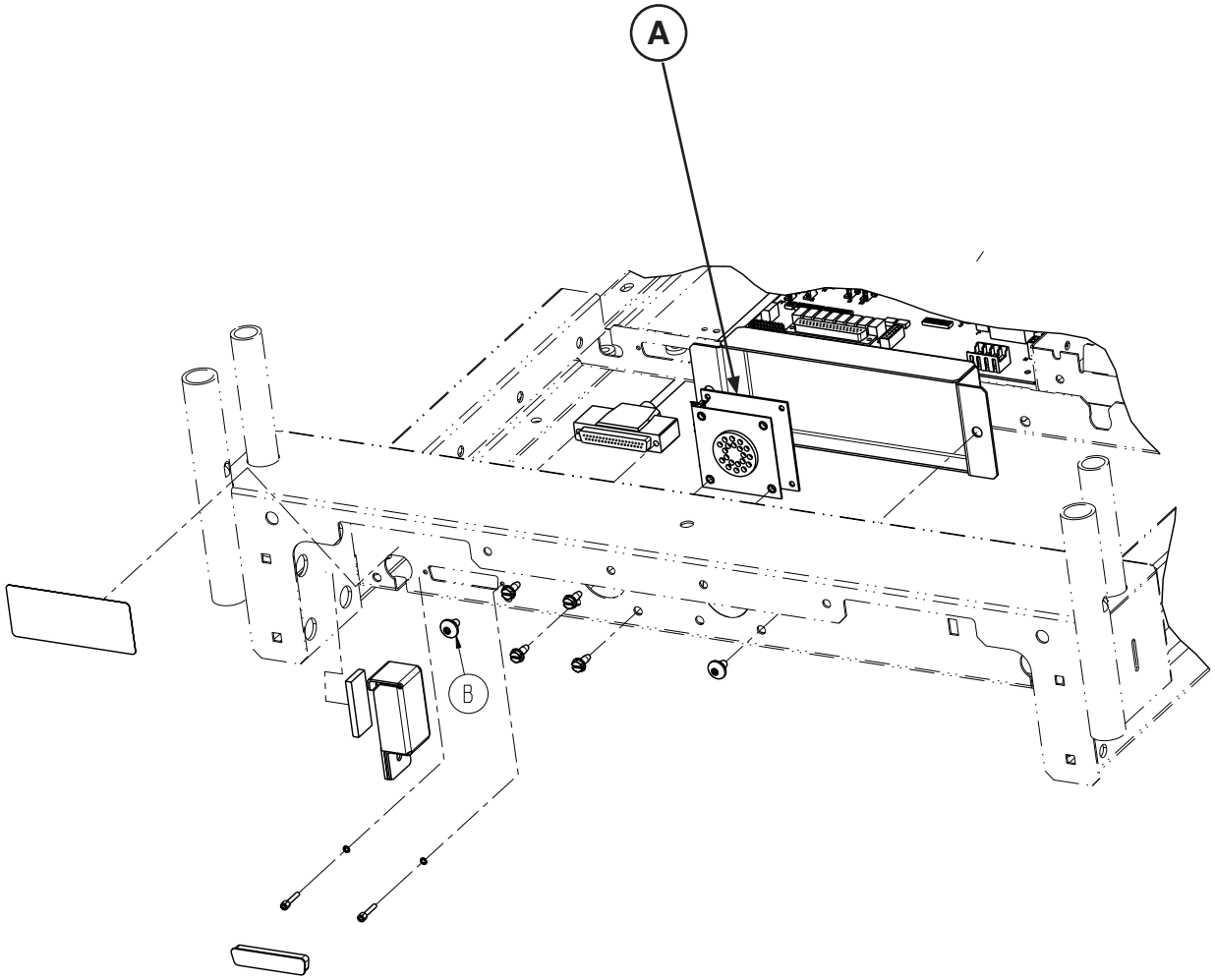

Item	Recycling/Material Code	Important Information	Qty
A	(3001-314-920) Pendant Port PCB		1

Return To Table of Contents

Recycling Passport

Assembly Part number: 3006-501-011 (Reference Only)

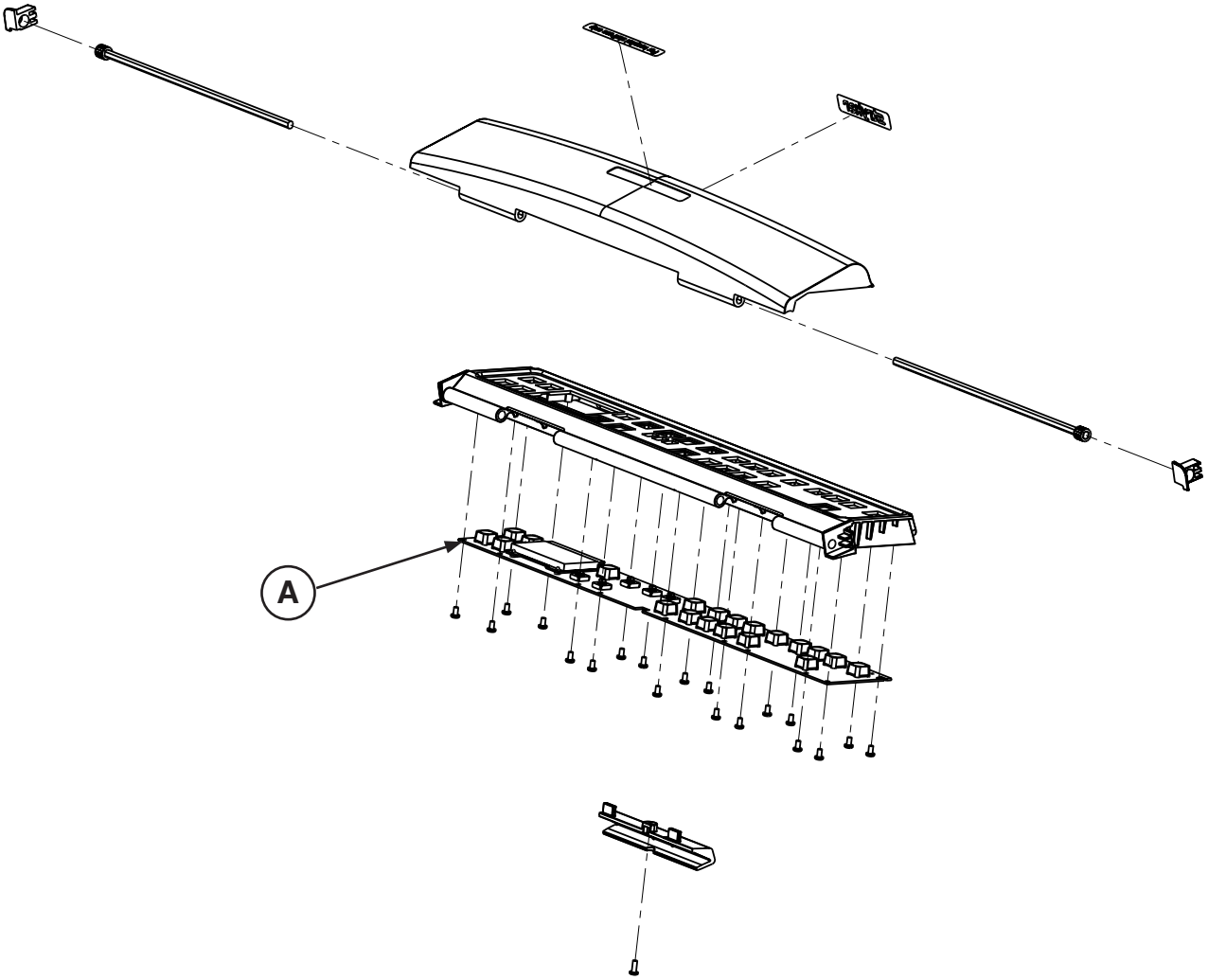

Item	Recycling/Material Code	Important Information	Qty
A	(3006-501-900) Footboard PCB		1

Return To Table of Contents

Assembly Part number: 5212-300-053 (Reference Only)

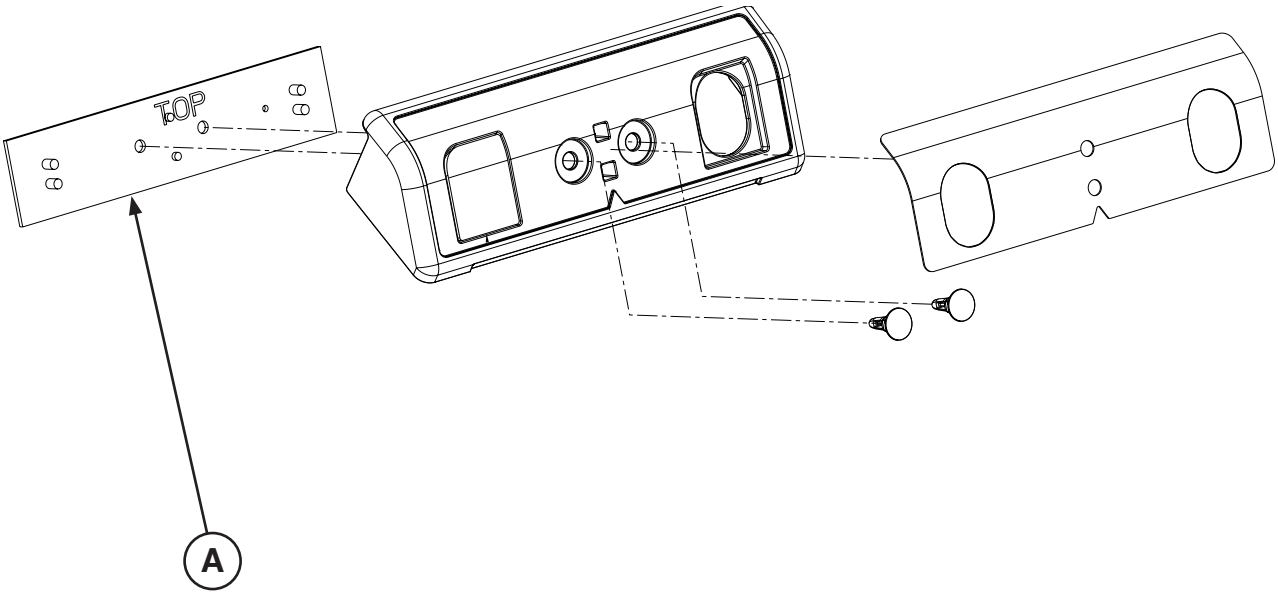

Item	Recycling/Material Code	Important Information	Qty
A	(5212-300-930) IR Module PCB Assembly		1

Return To Table of Contents

Assembly Part number: 5212-300-012 (Reference Only)

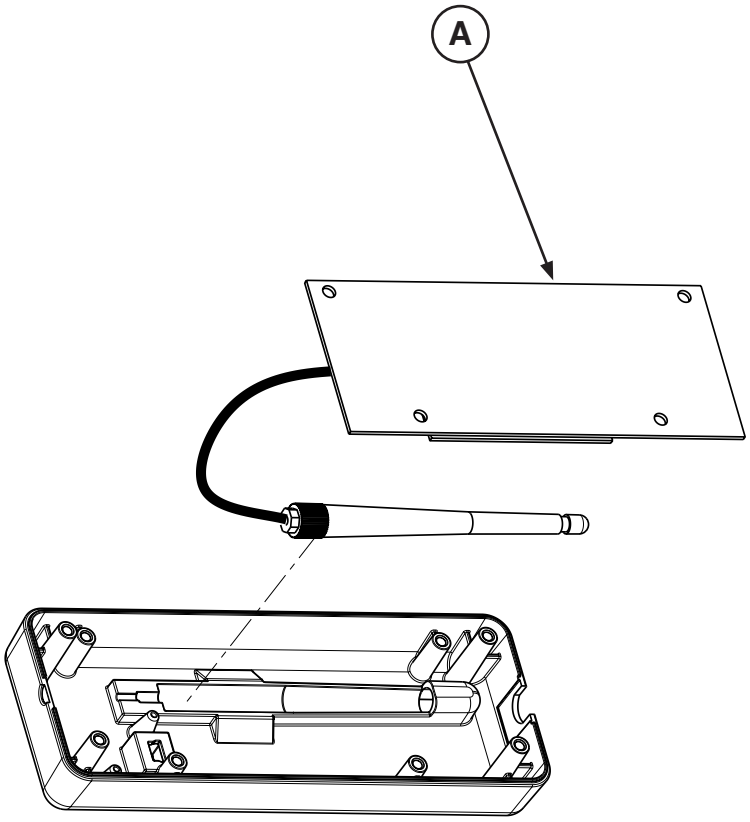

Item	Recycling/Material Code	Important Information	Qty
A	(5212-300-910) Wireless Module PCB Assembly		1

Return To Table of Contents

LIMITED WARRANTY

Stryker Medical Division, a division of Stryker Corporation, warrants to the original purchaser the S3™ MedSurg Bed, Model 3002 to be free from defects in material and workmanship for a period of one (1) year after date of delivery. Stryker's obligation under this warranty is expressly limited to supplying replacement parts and labor for, or replacing, at its option, any product which is, in the sole discretion of Stryker, found to be defective. If requested by Stryker, products or parts for which a warranty claim is made shall be returned prepaid to the factory. Any improper use or any alteration or repair by others in such manner as in Stryker's judgment affects the product materially and adversely shall void this warranty. Any repair of Stryker products using parts not provided or authorized by Stryker shall void this warranty. No employee or representative of Stryker is authorized to change this warranty in any way.

Stryker Medical beds are designed for a 15 year expected service life under normal use, conditions, and with appropriate periodic maintenance as described in the maintenance manual for each device. Stryker warrants to the original purchaser that the welds on its beds will be free from structural defects for the expected 15 year life of the bed as long as the original purchaser owns the product.

Stryker Medical optional components and/or accessories are warranted as follows:

- Motion/Nurse Call Pendant: Two (2) years service life under normal use and proper care
- Motion/Nurse Call/SmartTV Pendant: Two (2) years service life under normal use and proper care
- *i*Bed® Wireless Components: Ten (10) years service life under normal use and proper care

This statement constitutes Stryker's entire warranty with respect to the aforesaid equipment. **Stryker Makes No Other Warranty Or Representation, Either Expressed Or Implied, Except As Set Forth Herein. There Is No Warranty Of Merchantability And There Are No Warranties Of Fitness For Any Particular Purpose. In No Event Shall Stryker Be Liable Here Under For Incidental Or Consequential Damages Arising From Or In Any Manner Related To Sales Or Use Of Any Such Equipment.**

TO OBTAIN PARTS AND SERVICE

Stryker products are supported by a nationwide network of dedicated Stryker Field Service Representatives. These representatives are factory trained, available locally, and carry a substantial spare parts inventory to minimize repair time. Simply call your local representative, or call Stryker Customer Service USA at 1-800-327-0770, Canada 1-888-233-6888.

SERVICE CONTRACT COVERAGE

Stryker has developed a comprehensive program of service contract options designed to keep your equipment operating at peak performance at the same time it eliminates unexpected costs. We recommend that these programs be activated before the expiration of the new product warranty to eliminate the potential of additional equipment upgrade charges.

A SERVICE CONTRACT HELPS TO:

- Ensure equipment reliability
- Stabilize maintenance budgets
- Diminish downtime
- Establish documentation for JCAHO
- Increase product life
- Enhance trade-in value
- Address risk management and safety

Return To Table of Contents

SERVICE CONTRACT PROGRAMS

Stryker Offers the following service contract programs:

Service Agreement Options *	Premium	Complete	Standard
Annually scheduled preventative maintenance	X		X
All parts	X	X	
All labor and travel	X	X	
Unlimited emergency service calls	X	X	
Priority one contact: two hour phone response	X	X	
Most repairs completed within 3 days	X	X	
JCAHO documentation	X	X	X
On-site record of PM & emergency service	X		X
Factory-trained Stryker service technician	X	X	X
Stryker authorized parts used	X	X	X
Service during regular business hours (8-5)	X	X	X

* Does not include maintenance due to abuse or for any disposable items. Stryker reserves the right to change options without notice.

Stryker Medical also Offers personalized service contracts.
Pricing is determined by age, location, model and condition of product.

For more information on our service contracts,
please call your local representative.

RETURN AUTHORIZATION

Merchandise cannot be returned without approval from the Stryker Customer Service Department. An authorization number will be provided which must be printed on the returned merchandise. Stryker reserves the right to charge shipping and restocking fees on returned items. **Special, Modified, Or Discontinued Items Not Subject To Return.**

DAMAGED MERCHANDISE

ICC Regulations require that claims for damaged merchandise must be made with the carrier within fifteen (15) days of receipt of merchandise. **Do Not Accept Damaged Shipments Unless Such Damage Is Noted On The Delivery Receipt At The Time Of Receipt**. Upon prompt notification, Stryker will file a freight claim with the appropriate carrier for damages incurred. Claim will be limited in amount to the actual replacement cost. In the event that this information is not received by Stryker within the fifteen (15) day period following the delivery of the merchandise, or the damage was not noted on the delivery receipt at the time of receipt, the customer will be responsible for payment of the original invoice in full. Claims for any short shipment must be made within thirty (30) days of invoice.

INTERNATIONAL WARRANTY CLAUSE

This warranty reflects U.S. domestic policy. Warranty outside the U.S. may vary by country. Please contact your local Stryker Medical representative for additional information.

Return To Table of Contents

S3™ MEDSURG BED

Guidance and Manufacturer's declaration - Electromagnetic Immunity			
The S3™ MedSurg Bed is suitable for use in the electromagnetic environment specified below. The customer or the user of the S3™ MedSurg Bed should assure that it is used in such an environment.			
Immunity Test	**IEC 60601 Test Level**	**Compliance Level**	**Electromagnetic Environment Guidance**
Electrostatic Discharge (ESD) IEC 61000-4-2	±6 kV contact ±8 kV air	±6 kV contact ±8 kV air	Floors should be wood, concrete, or ceramic tile. If floors are covered with synthetic material, the relative humidity should be at least 30%.
Electrostatic fast Transient/burst IEC61000-4-4	±2 kV for power supply lines ±1 kV for input/ output lines	±2 kV for power supply lines ±1 kV for input/ output lines	Main power quality should be that of a typical commercial or hospital environment.
Surge IEC 61000-4-5	±8 kV differential mode ±2 kV common mode	±8 kV differential mode ±2 kV common mode	Main power quality is that of a typical commercial and/or hospital environment.
Voltage dips, voltage variations and short interruptions on power supply input lines IEC 61000-4-11	<5%Ut (95% dipUt) for 0,5 cycle 40%Ut (60% dop in Ut) for 5 cycles 70%Ut (30% dip in Ut) for 25 cycles. <5% Ut (>95% dip in Ut) for 5 sec.	<5%Ut (95% dipUt) for 0,5 cycle 40%Ut (60% dop in Ut) for 5 cycles 70%Ut (30% dip in Ut) for 25 cycles. <5% Ut (>95% dip in Ut) for 5 sec.	Main power quality should be that of a typical commercial and/or hospital environment. If the user of the S3™ MedSurg Bed requires continued operation during power main interruptions, it is recommended that the device be powered from an uninterrupted power supply or a battery.
Power frequency (50/60 Hz) magnetic field IEC 61000-4-8	3 A/m	3 A/m	Power frequency magnetic fields should be at levels characteristic of a typical location in a typical commercial and/or hospital environment.
Note: U_T is the a.c. mains voltage prior to applications of the test level.			

Return To Table of Contents

S3™ MEDSURG BED (CONTINUED)

Recommended separation distances between portable and mobile RF communications equipment and the S3™ MedSurg Bed.

The S3™ MedSurg Bed is intended for use in an electromagnetic environment in which radiated RF disturbances are controlled. The customer or the user of the S3™ MedSurg Bed can help prevent electromagnetic interferences by maintaining a minimum distance between portable and mobile RF communications equipment (transmitters) and the S3™ MedSurg Bed as recommended below, according to the maximum output power of the communications equipment.

Rated maximum output power of transmitter W	Separation distance according to frequency of transmitter m		
	150 kHz to 80 MHz $d=1,2\sqrt{P}$	80 MHz to 800 MHz $d=1,2\sqrt{P}$	8000 MHz to 2,5 GHz $d=2,3\sqrt{P}$
0,01	1,12	0,12	0,23
0,1	0,38	0,38	0,73
1	1,2	1,2	2,3
10	3,8	3,8	7,3
100	12	12	23

For transmitters rated at a maximum output power not listed above, the recommended separation distance *d* in meters (m) can be estimated using the equation applicable to the frequency of the transmitter, where *P* is the maximum output power rating of the transmitter in watts (W) according to the transmitter manufacturer.

Note 1
At 80 MHz and 800 MHz, the separation distance for the higher frequency range applies.

Note 2
These guidelines may not apply in all situations. Electromagnetic propagation is affected by absorption and reflection from structures, objects and people.

Return To Table of Contents

S3™ MEDSURG BED (CONTINUED)

The S3™ MedSurg Bed is suited for use in the electromagnetic environment specified below. The customer or the user of the S3™ MedSurg Bed should assure that it is used in such an environment.

Immunity Test	IEC 60601 Test Level	Compliance Level	Electromagnetic Environment - Guidance
Conducted RF IEC 6100-4-6 Radiated RF IEC 61000-4-3	3 Vrms 150 kHz to 80 MHz 3 V/m 80 MHz to 2,5 GHz	3 Vrms 3 V/m	Portable and mobile RF communications equipment should be used no closer to any part of the S3™ MedSurg Bed, including cables, than the recommended separation distance calculated from the equation appropriate for the frequency of the transmitter. Recommended Separation Distance $d=1,2\sqrt{P}$ $d=1,2\sqrt{P}$ 80 MHz to 800 MHz $d=2,3\sqrt{P}$

Note 1
At 80 MHz and 800 MHz, the higher frequency range applies.

Note 2
These guidelines may not apply in all situations. Electromagnetic propagation is affected by absorption and reflection from structures, objects and people.

[a]Field strengths from fixed transmitters, such as base stations for radio (cellular/cordless) telephones and land mobile radios, amateur radio, AM and FM radio broadcast, and TV broadcast cannot be predicted theoretically with accuracy. To assess the electromagnetic environment due to fixed RF transmitters, an electromagnetic site survey should be considered. If the measured field strength in the location in which the S3™ MedSurg Bed is used exceeds the applicable RF compliance level above, the S3™ MedSurg Bed should be observed to verify normal operation. If abnormal performance is observed, additional measures may be necessary, such as reorienting or relocating the S3™ MedSurg Bed.

[b]Over the frequency range 150 kHz to 80 MHz, field strengths are less than 3 V/m.

Return To Table of Contents

S3™ MEDSURG BED (CONTINUED)

Guidance and Manufacturer's declaration - Electromagnetic Emissions		
The S3™ MedSurg Bed is intended for use in an electromagnetic environment specified below. The customer or the user of the S3™ MedSurg Bed should assure that it is used in such an environment.		
Emissions Test	**Compliance**	**Electromagnetic Environment**
RF Emissions CISPR 11	Group 1	The S3™ MedSurg Bed uses RF energy only for its internal function. Therefore, its RF emissions are very low and are not likely to cause any interference in nearby electronic equipment.
RF Emissions CISPR 11	Class A	The S3™ MedSurg Bed is suitable for use in all establishments other than domestic and those directly connected to the public low voltage power supply network that supplies buildings used for domestic purposes.
Harmonic Emissions IEC 61000-3-2	Class A	
Voltage Fluctuations Flicker Emissions IEC 6100-3-3	Complies	

Return To Table of Contents

UNITED STATES
Stryker Medical
3800 E. Centre Ave.,
Portage, Michigan USA
49002

EC	REP

European Representative
Stryker France
ZAC Satolas Green Pusignan
Av. De Satolas Green
69881 MEYZIEU Cedex
France

Made in the U.S.A.

stryker®

2011/03 3006-209-002 REV A www.stryker.com