stryker®

Maintenance Manual

Medical

Epic II Critical Care Bed
Model 2030

Important Information
File in your maintenance records

For parts or technical assistance call
800 327 0770 (option 2)

Table of Contents

Introduction

- Specifications 4
- Warning/Caution/Note Definition 5
- Safety Tips and Guidelines . . . . . 5−7
- Set−Up Procedures 8
- Bed Symbols . . . . . 9−16

Preventive Maintenance

- Cleaning 17
- Preventive Maintenance Checklist 18
- General Information 19

Troubleshooting

- Static Discharge Precautions 20
- Troubleshooting Guide 21, 22
- Optional Epic+ Battery Backup Troubleshooting Guide 23
- Inverter/Charger, Battery and Zoom® Troubleshooting Flow Chart 24, 25

Electrical System Information

- CPU Board 26, 27
- Software Configuration . . . . . 28−29
- Power Supply 30
- Optional Epic Ii+ Inverter/Charger Board 31
- Optional Epic II+ Display CPU Board 32
- Optional Epic II+ AC Crossover Board 33
- Optional Inverter Protection Features and Voltage Points 34
- Electrical System Information 36, 37

Quick Reference Replacement Parts List 38, 39

Service Information

- Brake Pedal Replacement 40
- Lift Motor and Capacitor Removal and Replacement 41
- Lift Housing Removal and Replacement 42, 43
- Lift Potentiometer Replacement and Adjustment 44, 45
- Lift Potentiometer “Burn In” Procedure 45
- Lift Motor Coupler Replacement 46
- Power and Sensor Coil Cord Replacement 47, 48
- Optional Battery Removal and Replacement 49, 50
- Scale System Diagnostics and Calibration . . . . . 51−53
- Load Cell Replacement 54
- Head Motor Removal and Replacement 54

Table of Contents

Service Information (Continued)

Knee Motor Removal and Replacement 55
Power Supply Removal and Replacement 56
CPU Board Removal and Replacement 56
Fowler Potentiometer Replacement 57
Fowler Potentiometer “Burn−In” Procedure 58
Optional Smart−TV Interface “Burn−In” Procedure 59
Optional Epic II+ AC Crossover Board Replacement 60, 61
Optional Epic II+ Display/CPU Board Replacement 62
Head and Foot End Siderail Cover Removal 63
Head and Foot Molded Siderail Replacement 64
Head End Siderail Cable Replacement 65, 66
Foot Board Hinge Removal 67
Foot Board Module Replacement 68
Foot Board Interface Plug Replacement 69

Assembly Drawings And Parts Lists

Base Assembly . . . . . 70−78
Lift Assembly . . . . . 79−82
Isolation Plate Assembly 83
Brake Shaft Assembly 84
Brake Crank Assembly 85
Brake Bar Assembly 86
6” Caster Assembly 87, 88
6” Wheel Assembly 89
8” Caster Assembly 90
8” Wheel Assembly 91
Base Uni−Pan Cover Assembly 92
Optional 8” Wheel Assembly 93
Epic II+ Base Assembly . . . . . 94−99
Epic II+ Base Power Assembly 100
Bottom Cover Assembly 101
Epic II+ Battery Assembly 102
Litter Assembly . . . . . 103−118
Actuator Box Cover Assembly 119
Fowler Brake Kit Assembly 120
Epic II+ Litter Assembly . . . . . 121−127
Epic II 110V Outlet Assembly 128, 129
Epic II No 110V Outlet 130

Table of Contents

Assembly Drawings And Parts Lists (Continued)
- Epic II+ No 110V Outlet 131, 132
- Epic II+ 110V Outlet Assembly . . . . . 133−135
- 110V Box Assembly 136, 137
- Head End Siderail Assembly . . . . . 138−145
- Head End Siderail Latch Assembly . . . . . 146−149
- Siderail Bypass Detent Clip Assembly 150
- Head End Siderail Outer Panel Assembly 151
- Head End Siderail Inner Panel Assembly 152
- Foot End Siderail Assembly . . . . . 153−156
- Siderail Release Lever Assembly 157, 158
- Head Board Assembly 159
- Foot Board Assembly . . . . . 160−166
- Foot Board Main Module Assembly 167
- Foot Board Emergency Drop/Cardiac Chair Module Assembly 168
- Foot Board Bed Exit Module Assembly 169,170
- Foot Board Scale Module Assembly 171
- Pendant Assembly 172
- Removable IV Pole Assembly 173
- 2−Stage IV Mounting Assembly, Foot End 174
- 2−Stage IV Mounting Assembly, Head End 175
- 2−Stage IV Mounting Assembly, Dual Head End 176
- 2−Stage IV Pole Assembly 177
- IV Pole Latch Assembly 178
- Fowler X−Ray Cassette Holder Assembly 179
- IV Pole Transducer Mount Assembly 180
- Defibrillator Tray Assembly 182
- Pleur−Evac Rack with Defibrillator Tray Assembly 183, 184
- Pleur−Evac Rack Assembly 185
- Optional Pump Rack Assembly 186
- Upright Oxygen Bottle Holder Assembly 187
- Optional Bed Extender Pad 188
- Optional Siderail Pad Set 189
- Recycling Passports . . . . . 190−198

Limited Warranty
- Obtaining Parts and Service 199
- Supplemental Warranty Coverage 199
- Return Authorization 200
- Freight Damage Claims 200

INTRODUCTION

This manual is designed to assist you with the maintenance of the Stryker Model 2030 Epic II and Epic II + Critical Care Beds. Read it thoroughly before using the equipment or beginning any maintenance on it.

SPECIFICATIONS

Safe Working Load	500 pounds (227 kilograms)
Scale System Capacity (optional equipment)	Loads weighing up to 500 pounds (227 kilograms)
Scale System Accuracy (optional equipment)	±1 pound of total patient weight at any bed position[1] (patients weighing 100 pounds or less) ±1% of total patient weight at any bed position[1] (patients weighing greater than 100 pounds)
Overall Bed Length/Width	L−91” /W−42.5” or L−231 cm /W−108 cm
Minimum/Maximum Bed Height (Standard) Minimum/Maximum Bed Height (Enhanced)	18” to 32.5” ±0.5 / 46 cm. to 82.5 cm. 19.5” to 34.5” ±0.5 / 49.5 cm. to 88 cm. (Add 2 inches if the bed has 8” casters.)
Fluoro Access	17.5” (Epic II®), 16” (Epic II®+)
Knee Gatch Angle	0° to 30°
Back Angle	0° to 90°
Trendelenburg/Reverse Trendelenburg	−12° to +12° ±2°
Electrical Requirements	115 VAC, 60 Hz, 7.0 Amps / 230 VAC, 50/60 Hz, 4.0 Amps 100 VAC, 50/60 Hz, 9.0 Amps (Japan Option)
Battery Voltage (Optional)	24 V, 31 Ah
Noise Level	> 65 Decibels
Outlet Option	125 VAC, 5A, 60 Hz

[1] If the bed is equipped with the enhanced height option, the scale accuracy is as described above for litter angles from 0° to ± 5° Trend.

MATTRESS SPECIFICATIONS

Thickness	6”
Width	>= 35”
Length	>= 84”
ILD	80

Stryker reserves the right to change specifications without notice.

WARNING / CAUTION / NOTE DEFINITION

The words WARNING, CAUTION and NOTE carry special meanings and should be carefully reviewed.

⚠ **WARNING**

Alerts the reader about a situation, which if not avoided, could result in death or serious injury. It may also describe potential serious adverse reactions and safety hazards.

⚠ **CAUTION**

Alerts the reader of a potentially hazardous situation, which if not avoided, may result in minor or moderate injury to the user or patient or damage to the equipment or other property. This includes special care necessary for the safe and effective use of the device and the care necessary to avoid damage to a device that may occur as a result of use or misuse.

NOTE

This provides special information to make maintenance easier or important instructions clearer.

SAFETY TIPS AND GUIDELINES

Before operating the Epic II® and Epic II®+ Critical Care Beds, it is important to read and understand all information in this manual. Carefully read and strictly follow the guidelines listed on this page and the following pages.
To ensure safe operation of the bed, methods and procedures must be established for educating and training hospital staff on the intrinsic risks associated with the usage of electric beds.

⚠ **WARNING**

- The Epic II® Critical Care Bed is equipped with a hospital grade plug for protection against shock hazard. It must be plugged directly into a properly grounded three−prong receptacle. Grounding reliability can be achieved only when a hospital grade receptacle is used.
- Serious injury can result if caution is not used when operating the bed. Operate bed only when all persons are clear of the electrical and mechanical systems.
- To help reduce the number and severity of falls by patients, always leave the bed in the lowest position when the patient is unattended.
- When raising the siderails, listen for the ”click” that indicates the siderail has locked in the up position. Pull firmly on the siderail to ensure it is locked into position. Siderails are not intended to be a patient restraint device. It is the responsibility of attending medical personnel to determine the degree of restraint and the siderail positioning necessary to ensure a patient will remain safely in bed.
- Always apply the caster brakes when a patient is getting on or off the bed. Always keep the caster brakes applied when a patient is on the bed (except during transport). Serious injury could result if the bed moves while a patient is getting in or out of bed. After the brake pedal is applied, push on the bed to ensure the brakes are locked. When moving the bed, toggle the steer pedal to put the bed in the steer mode. This locks the swivel motion of the right foot end caster and makes the bed easier to move.
- Ensure the brakes are completely released prior to attempting to move the bed. Attempting to move the bed with the brakes actuated could result in injury to the user and/or patient.
- Assistance is required to lower the Back if the angle of the Back is greater than 80° when the CPR emergency release is activated. Attempting to lower the Back in this position without assistance may result in injury to the operator.

SAFETY TIPS AND GUIDELINES CONTINUED

- The Bed Exit System is intended only to aid in the detection of a patient exiting the bed. It is NOT intended to replace patient monitoring protocol. The bed exit system signals when a patient is about to exit. Adding or subtracting objects from the bed after arming the bed exit system may cause a reduction in the sensitivity of the bed exit system.
- If the bed is equipped with the Epic II®+ option, there is a power save mode. The power save mode is activated after one hour on battery power with no motion release switch activation. Functions including Bed Exit, scale and motion will cease to operate when the unit enters the power save mode. Injury to the patient could occur if proper patient monitoring protocol is not observed.
- Due to the weight the battery back−up option adds to the bed (approximately 50 pounds), additional force is required to move a bed equipped with the Epic II®+ Option. Caution should be used when transporting this bed. Additional assistance should be used when necessary. Failure to use caution while transporting this bed may result in injury to the user.
- Always unplug bed during service or cleaning. When working under the bed, always place blocks under the litter frame to prevent injury in case the Bed Down switch is accidently activated.
- The battery tray assembly weighs 50 pounds. Take care when removing the two hex head screws securing it to the base frame or personal injury could result.
- Battery posts, terminals and related accessories contain lead and lead compounds, chemicals known to the State of California to cause cancer and birth defects or other reproductive harm. **Wash hands after handling.**
- The Epic II® Critical Care Bed is not intended for pediatric use or for patients under 50 pounds.
- Explosion Hazard − do not use bed in the presence of flammable anesthetics.
- To avoid entanglement, possibly resulting in frayed power cords and risk of electrical shock, wrap the bed power cord around the roller bumpers at the head end of the bed during transport.
- Service only by qualified personnel. Refer to the maintenance manual. V erify the power cord is unplugged and the battery power switch (Epic II®+ option) is turned to the off position before servicing.
- When using the Symmetric Aire™ Mattress extra caution and or operator supervision is required to help reduce the likelihood of a patient fall occurring.

To avoid possible injury and to assure proper operation when using a powered mattress replacement system such as XPRT:

- Confirm proper scale system operation following mattress installation. For best results, secure the therapy mattress power cord to prevent damage to the cord or interference with the bed frame and the scale system.
- Do not zero bed scales or weigh patient with Percussion, Vibration, Rotation or Turn−Assist active. Patient motion and position resulting from the dynamic therapy mattress may adversely affect scale system performance.
- Do no initialize (“arm”) bed exit with Percussion, Vibration, Rotation or Turn−Assist active. The patient motion and position resulting from the dynamic therapy mattress may adversely affect bed exit system performance.
- When using an XPRT Therapy Mattress extra caution and or operator supervision is required to help reduce the likelihood of a patient fall occurring.

SAFETY TIPS AND GUIDELINES CONTINUED

⚠ **CAUTION**

- Scale function may be affected by siderail/caster interference. With the litter fully lowered or lowered in Reverse Trendelenburg, the siderails tucked under the litter in the storage position and the casters turned, there is the potential for interference between the siderail and the caster. Raise the siderails when lowering the litter to the full down position to prevent the interference from causing the bed's scale system to weigh inaccurately.
- The lockout buttons on the foot board lock the Fowler, Gatch and Bed Up/Down functions and prevent motion of the bed. It is the responsibility of attending medical personnel to determine whether these functions should be locked and to use the buttons accordingly.
- Because individual beds may have different options, foot boards should not be moved from one bed to another. Mixing foot boards could result in unpredictable bed operation.
- If large fluid spills occur in the area of the circuit boards or motors, immediately unplug the bed power cord from the wall socket. Remove the patient from the bed and clean up the fluid. Have maintenance completely check the bed. Fluids can short out controls and may cause the bed to operate erratically or make some functions completely inoperable. Component failure caused by fluids could cause the bed to operate unpredictably and could cause injury to the patient. DO NOT put the bed back into service until it is completely dry and has been thoroughly tested for safe operation.
- Preventative maintenance should be performed at a minimum of annually to ensure all features are functioning as designed. Close attention should be given to safety features including, but not limited to:

Safety side latching mechanisms	Caster braking systems
Leakage current 300 microamps max.	No controls or cabling entangled in bed mechanisms
Frayed electrical cords and components	All controls return to off or neutral position when released

- The siderails are not intended to be used as a pushing device. Damage to the siderails could occur.
- The use of a mattress overlay may reduce the effectiveness of the siderail.
- When attaching equipment to the bed, ensure it will not impede normal bed operation or patient injury could occur. For example: hooks on hanging equipment must not actuate control buttons, equipment must not hide the nurse call button, etc.
- The weight of the IV bags should not exceed 40 pounds.
- Do not add or remove weight when the bed exit system is armed.
- The cleanliness and integrity of both ground chains must be maintained to minimize static build−up and discharge.
- IV Poles should not be used as a bed push/pull device.

The following Caution statements apply to the optional outlet:

- Maximum total load 5A receptacle rating: 125VAC, 5A, 60Hz.
- The total system chassis risk current should not exceed 300uA
- Grounding continuity should be checked periodically.
- Do not use for life−sustaining equipment.
- Use only hospital−grade equipment with electrical outlet.
- Unplug free−standing equipment before transporting the bed.

SET−UP PROCEDURES

It is important that the Epic II® Critical Care Bed is working properly before it is put into service. The following list will help ensure that each part of the bed is checked.

- Plug the bed into a properly grounded, hospital grade wall receptacle.

⚠ **WARNING**

The Epic II® Critical Care Bed is equipped with a hospital grade plug for protection against shock hazard. It must be plugged directly into a properly grounded three−prong receptacle. Grounding reliability can be achieved only when a hospital grade receptacle is used.

- Depress the pedal at either side of the bed fully to set the four wheel brakes and ensure all four casters lock. Depress the pedal again to release the brakes.
- Toggle the steer pedal to put the bed in the steer mode and ensure the locking caster engages.
- Ensure the siderails raise and lower smoothly and lock in the up and intermediate positions.
- Run through each function on the foot board control panel and ensure that each is working properly.
- Ensure all functions are working properly on the siderail controls.
- Raise the Back up to approximately 60°. Squeeze the CPR release handle and ensure the Back and Knee will drop with minimal effort.
- If the bed is equipped with the Epic II®+ battery backup option, unplug the power cord from the wall socket. Push the battery power switch located on the lower left corner of the head end to the “ON” position. Again, verify each function on the foot board and siderails is operating properly. The 12 volt batteries that provide back−up power to the unit functions with the Epic II ®+ option will charge whenever the power cord is plugged into the wall socket. The batteries require approximately 10 hours of charging time before the bed is put into service.
- If the bed is equipped with the Nurse Call option, verify it is functioning properly prior to patient use.

BED SYMBOLS

Warning, Refer to Service/Maintenance Manual

~ Alternating Current

Type B Equipment: equipment providing a particular degree of protection against electric shock, particularly regarding allowable leakage current and reliability of the protective earth connection.

Class 1 Equipment: equipment in which protection against electric shock does not rely on BASIC INSULATION only, but which includes an additional safety precaution in that means are provided for the connection of the EQUIPMENT to the protective earth conductor in the fixed wiring of the installation in such a way that ACCESSIBLE METAL PARTS cannot become live in the event of a failure of the BASIC INSULA TION.

Mode of Operation: Continuous

IPX4: Protection from liquid splash

Dangerous Voltage Symbol

Protective Earth Terminal

Potential Equalization Symbol

Medical Equipment Classified by Underwriters Laboratories Inc. with Respect to Electric Shock, Fire, Mechanical and Other Specified Hazards Only in Accordance with UL 2601−1 and CAN/CSA C22.2 No. 601.1

Safe Working Load Symbol

In accordance with European Directive 2002/96/EC on Waste Electrical and Electronic Equipment, this symbol indicates that the product must not be disposed of as unsorted municipal waste, but should be collected separately. Refer to your local distributor for return and/or collection systems available in your country .

BED SYMBOLS

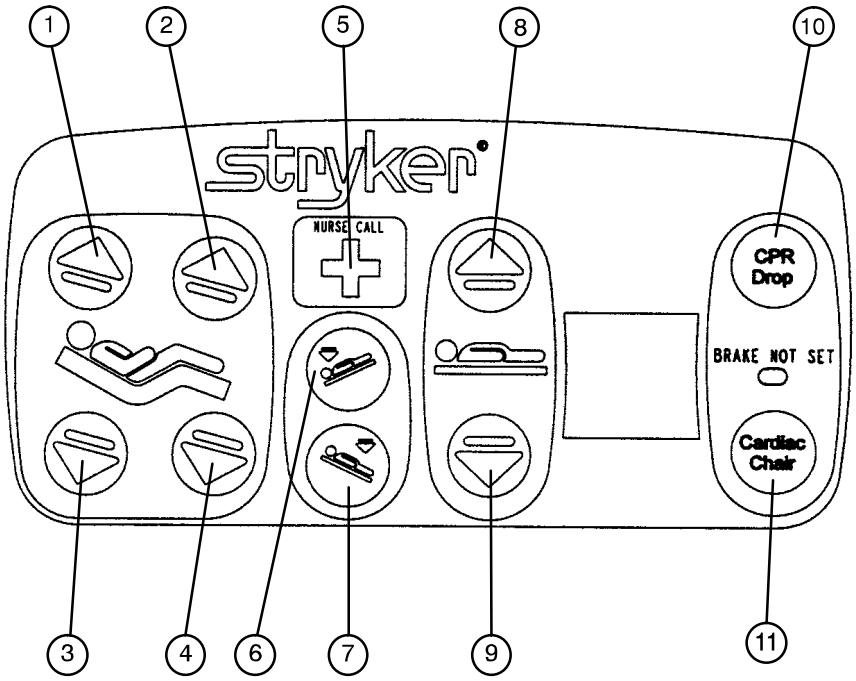

1. Press to raise back section.
2. Press to raise knee section.
3. Press to lower back section.
4. Press to lower knee section.
5. Press to activate nurse call.
6. Press to lower the head end of the bed (Trendelenburg).
7. Press to lower the foot end of the bed (Reverse Trendelenburg).
8. Press to raise the litter. If your bed is equipped with the enhanced height option, continue to hold the button an additional 5 seconds after the first stop. The litter will raise an additional 2 inches.
9. Press to lower the litter.
10. Press to activate emergency CPR positioning.
11. Press to activate emergency Cardiac Chair positioning.

BED SYMBOLS

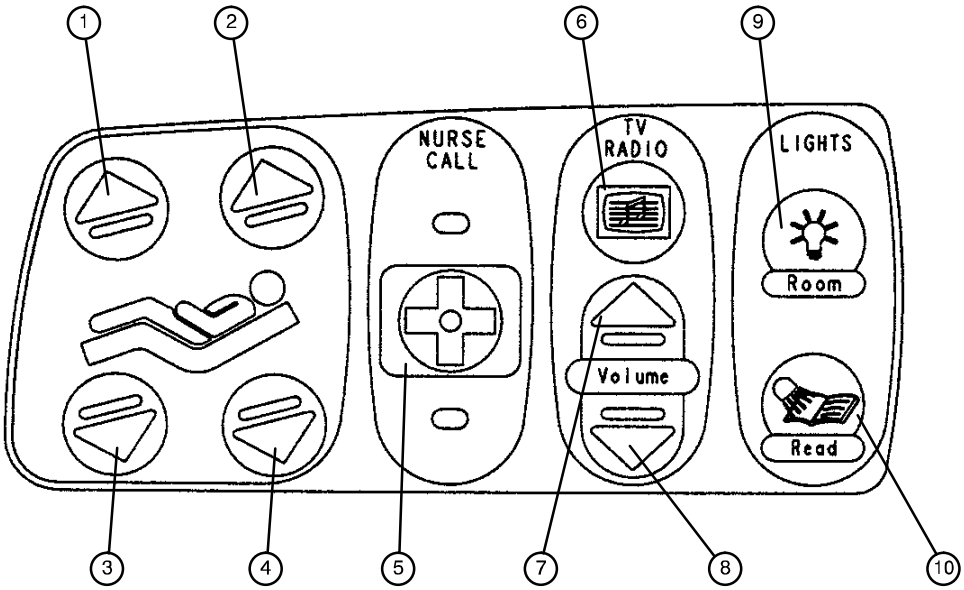

1. Press to raise knee section.
2. Press to raise back section.
3. Press to lower knee section.
4. Press to lower back section.
5. Press to activate the nurse call.
6. Press to turn on the TV or radio. Press again to change TV channels and to turn off the TV.
7. Press to increase the TV or radio volume.
8. Press to decrease the TV or radio volume.
9. Press to turn on the room lights. Press again to turn off.
10. Press to turn on the reading light. Press again to turn off.

BED SYMBOLS

WARNING

Because individual beds may have different options, foot boards should not be moved from one bed to another. Mixing foot boards could result in unpredictable bed operation.

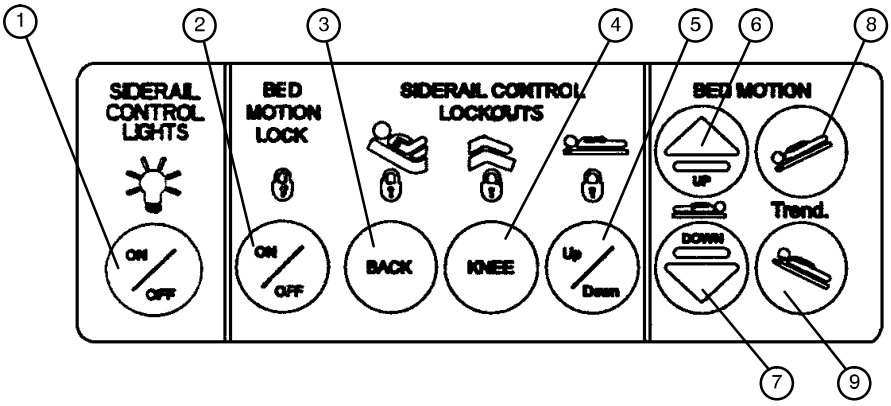

1. Press repeatedly for low, medium and high settings for the siderail control lights. Continue to press this switch to turn off the siderail control lights and the nurse call indicator light.
2. Press to lock out all bed motion controls on the siderails. Press again to unlock.
3. Press to lock out Back motion control on the siderails. Press again to unlock.
4. Press to lock out Knee motion control on the siderails. Press again to unlock.
5. Press to lock out bed up/down motion controls on the siderails. Press again to unlock.
6. Press to raise bed. If your bed is equipped with the enhanced height option, continue to hold the button an additional 5 seconds after the first stop. The litter will raise an additional 2 inches.
7. Press to lower bed.
8. Press to lower head end of bed (Trendelenburg).
9. Press to lower foot end of bed (Reverse Trendelenburg).

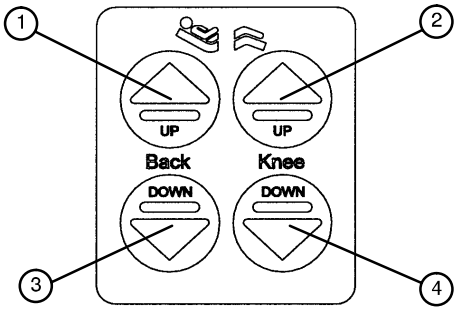

1. Press to raise back section.
2. Press to raise knee section.
3. Press to lower back section.
4. Press to lower knee section.

BED SYMBOLS

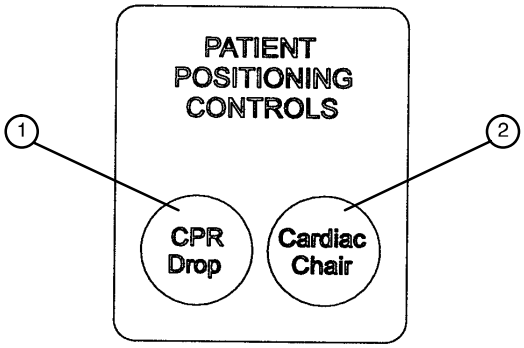

1. Press to activate the emergency CPR drop function. The bed will level from Trendelenburg/reverse Trendelenburg, the Fowler will lower to flat, the Knee will lower to flat and the litter will lower to full down.
2. Press to activate the Cardiac Chair function. The Knee will raise, the Fowler will raise or lower to approximately 52° and the bed will tilt to approximately −12° reverse Trendelenburg (foot end down) or −14° if the bed has the enhanced height option. Release the button to stop bed movement: hold the button until movement stops to complete the function.

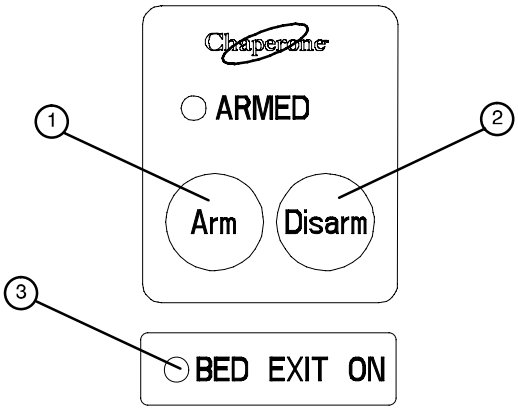

1. Push to arm the Bed Exit function.
2. Push to disarm the Bed Exit function.
3. “BED EXIT ON” LED − will light when the BED EXIT function is armed.

BED SYMBOLS

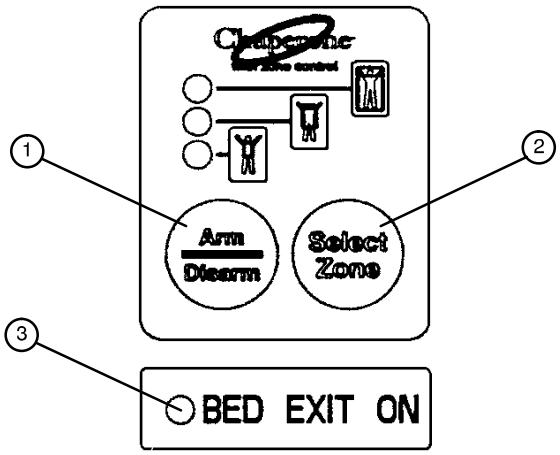

1. Press to arm or disarm the Bed Exit function.
2. Press to select the zone desired for Bed Exit function.
3. “BED EXIT ON” LED − will light when the BED EXIT function is armed.

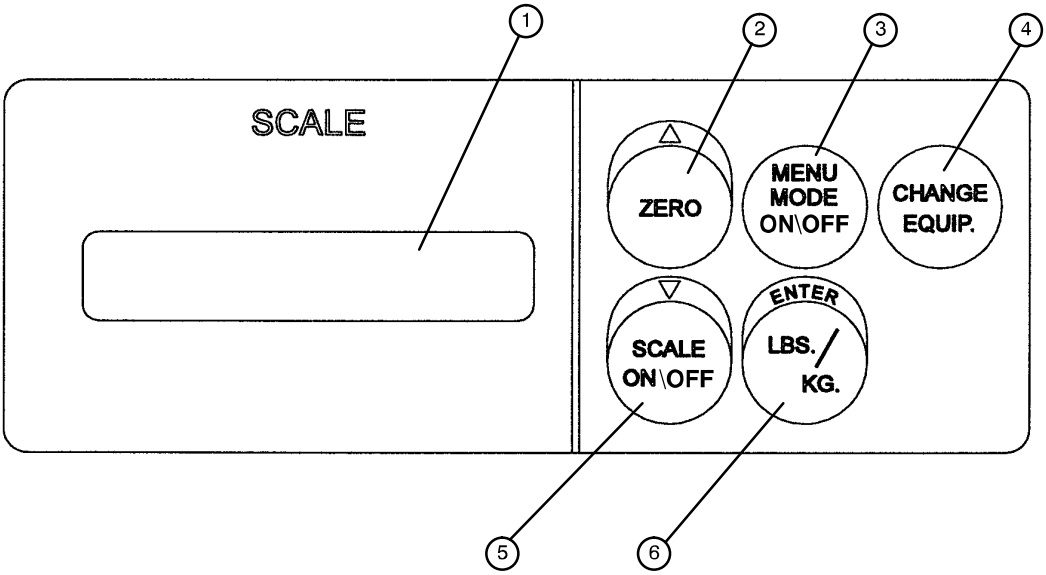

1. LCD − displays patient weight. Trendelenburg angle is displayed when the scale is not active.
2. Press to zero bed. Also press to scroll while Menu Mode is active.
3. Press to enter and exit the Menu Mode.
4. Press when adding or removing equipment to the bed.
5. Press to turn weigh system on and off. Also press to scroll while Menu Mode is active.
6. Press to change weight from pounds to kilograms or back. Also press while using the Menu Mode.

BED SYMBOLS

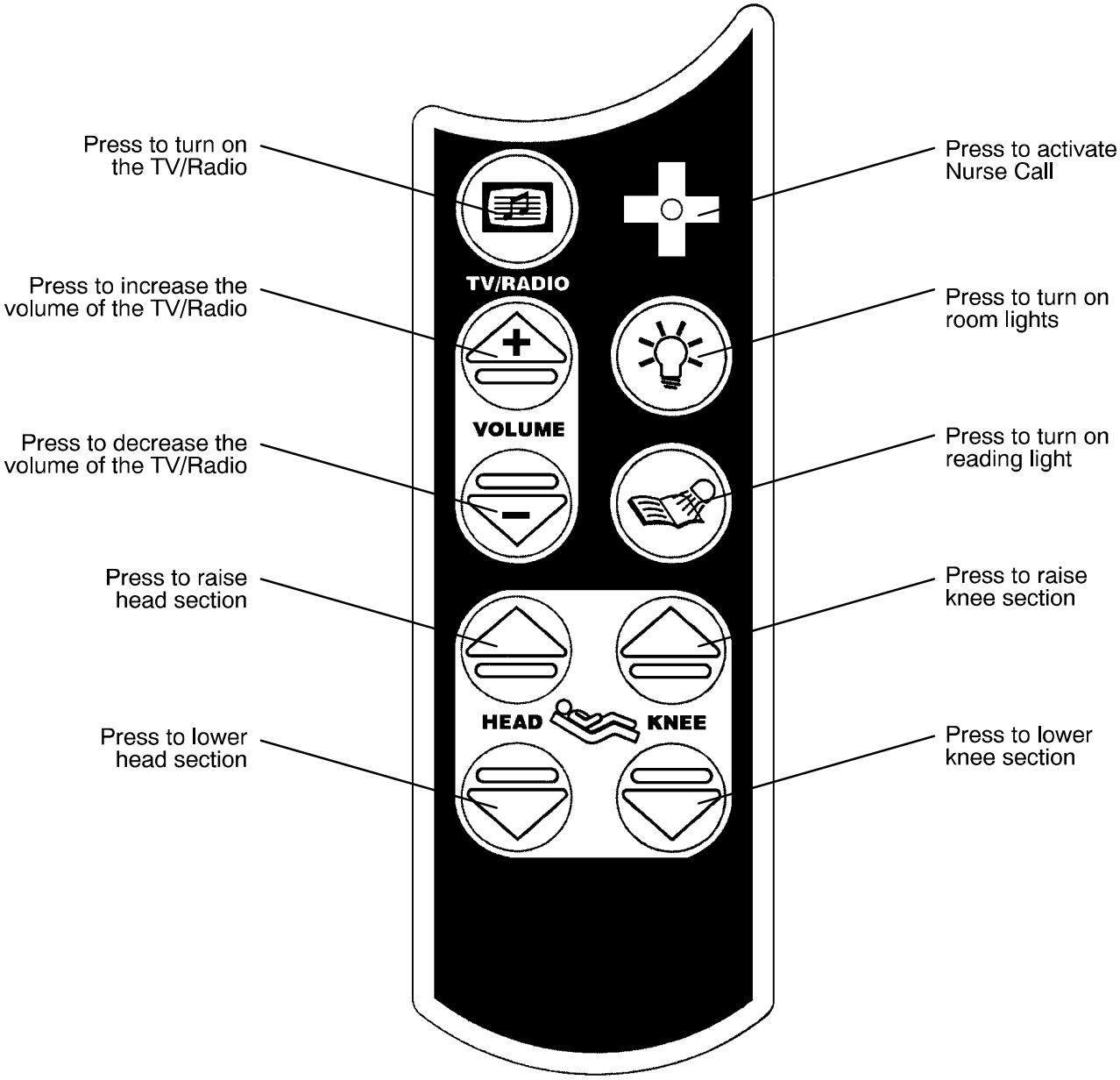
Press to turn on the TV/Radio
Press to increase the volume of the TV/Radio
Press to decrease the volume of the TV/Radio
Press to raise head section
Press to lower head section
TV/RADIO
VOLUME
HEAD
KNEE
Press to activate Nurse Call
Press to turn on room lights
Press to turn on reading light
Press to raise knee section
Press to lower knee section

BED SYMBOLS

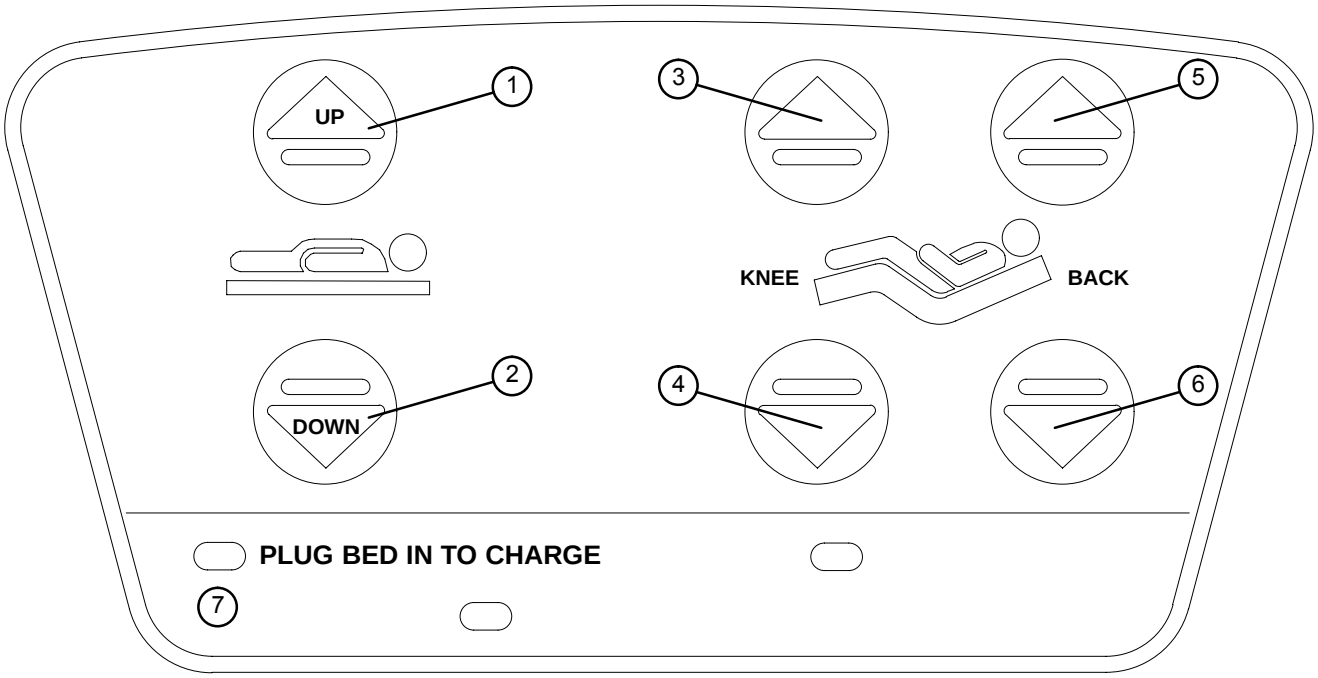

1. Press and hold to raise the litter. If your bed is equipped with the enhanced height option, continue to hold the button an additional 5 seconds after the first stop. The litter will raise an additional 2 inches.
2. Press and hold to lower the litter
3. Press to raise the Knee section.
4. Press to lower the Knee section.
5. Press to raise the Back section.
6. Press to lower the Back section.
7. The “Plug Bed In To Charge” LED will be illuminated while the battery power switch is on if the battery level is low. Plug the bed power cord into the wall socket to charge the batteries.

CLEANING

Hand wash all surfaces of the bed with warm water and mild detergent. DRY THOROUGHLY. Do not steam clean or hose off the Epic II Bed. Do not immerse any part of the bed. Some of the internal parts of the bed are electric and may be damaged by exposure to water.

Suggested cleaners for bed surfaces:

Quaternary Cleaners (active ingredient − ammonium chloride)

Phenolic Cleaners (active ingredient − o−phenylphenyol)

Chlorinated Bleach Solution (5.25% − less than 1 part bleach to 100 parts water)

Avoid over−saturation and ensure the product does not stay wet longer than the chemical manufacturer 's guidelines for proper disinfecting.

⚠ CAUTION

SOME CLEANING PRODUCTS ARE CORROSIVE IN NA TURE AND MAY CAUSE DAMAGE TO THE PRODUCT IF USED IMPROPERLY. If the products described above are used to clean Stryker patient care equipment, measures must be taken to insure the beds are wiped with clean water and thoroughly dried following cleaning. Failure to properly rinse and dry the beds will leave a corrosive residue on the surface of the bed, possibly causing premature corrosion of critical components. Failure to follow the above directions when using these types of cleaners may void this product's warranty.

For mattress cleaning instructions, please see the tag on the mattress, or contact the mattress manufacturer.

Clean Velcro® AFTER EACH USE. Saturate Velcro® with disinfectant and allow disinfectant to evaporate. (Appropriate disinfectant for nylon Velcro® should be determined by the hospital.

Preventative Maintenance

CHECKLIST

_____ All fasteners secure
_____ Engage brake pedal and push on the bed to ensure all casters lock securely
_____ Locking steer caster engages and disengages properly
_____ Siderails move, latch and stow properly
_____ All functions on siderails working properly (including LED's)
_____ Head End Control Panel working properly (including LED) − optional equipment
_____ Confirm battery powered functionality − optional equipment
_____ Manual CPR release working properly
_____ Optional Foot prop intact and working properly
_____ I.V. pole working properly
_____ Optional accessories intact and working properly
_____ No cracks or splits in head and foot boards
_____ All functions on footboard working properly (including LED's)
_____ No rips or cracks in mattress cover
_____ Scale and Bed Exit system calibrated properly − optional equipment
_____ Power cord not frayed
_____ No cables worn or pinched
_____ All electrical connections tight
_____ All grounds secure to the frame
_____ Ground impedance not more than 100 milliohms
_____ Current leakage not more than 300 microamps
_____ Ensure ground chains are clean, intact, and have at least two links touching the floor
_____ Fowler functioning properly

Bed Serial No. _____ _____
_____ _____
_____ _____
_____ _____
_____ _____

Completed By:_____ Date:_____

NOTE

Preventative maintenance should be performed at a minimum of annually. A preventative maintenance program should be established for all Stryker Medical equipment. Preventative maintenance may need to be performed more frequently based on the usage level of the product.

GENERAL INFORMATION

NOTE

To prevent a low battery condition when the bed is not plugged in, position the cord out switch at the head end of the bed to the off position. The switch is identified by the label shown below. If the switch is not positioned as shown below and the bed power cord and pendant cord are unplugged, the life of the back−up battery will be significantly reduced.
If the power light (located on the foot board) is flashing, the Nurse Call battery needs to be replaced. The battery is located on the patient's left side at the head end of the bed. No tools are required to replace the battery. Unplug the bed power cord from the wall socket and replace the battery. Properly dispose of the old battery in accordance with local regulations.

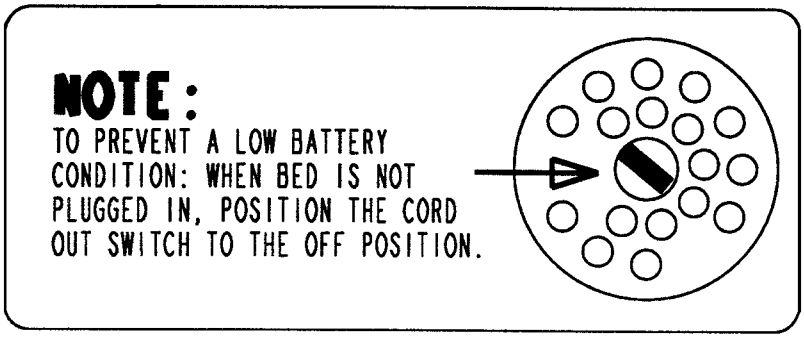

BATTERY CHARGER CIRCUIT BREAKER (EPIC II+ OPTION)

If the battery charger circuit breaker(s) located under the litter on the patient's head end, left side are tripped, refer to the troubleshooting section of the maintenance manual.

The electronic circuits in the 2030 are completely protected from static electricity damage only while the bed is assembled. It is extremely important that all service personnel always use adequate static protection when servicing the electronic systems of the 2030. *Whenever you are touching wires, you should be using static protection.*

Static Protection Equipment

The necessary equipment for proper static protection is:

- 1 static wrist strap; 3M part number 2214 or equivalent,
- 1 grounding plug; 3M part number 61038 or equivalent,
- 1 test lead with a banana plug on one end and an alligator clip on the other; Smith part number N132B699 or equivalent.

⚠ CAUTION

All electronic service parts will be shipped in static shielding bags. Do not open the bags until you have completed steps 2 and 3 of the following procedure. Do not place unprotected circuit boards on the floor. All circuit boards to be returned to Stryker Medical should be shipped in the static shielding bags the new boards were shipped in.

Static Protection Procedure

1. Unplug the power cord from the wall receptacle.

2. Insert the grounding plug into a properly grounded hospital grade wall receptacle. Plug the banana plug of the test lead into the receptacle on the grounding plug. Connect the alligator clip on the other end of the test lead to a ground point on the bed.

3. Place the static control wrist strap on your wrist. Connect the alligator clip at the other end of the wrist strap cord to a ground point on the bed.

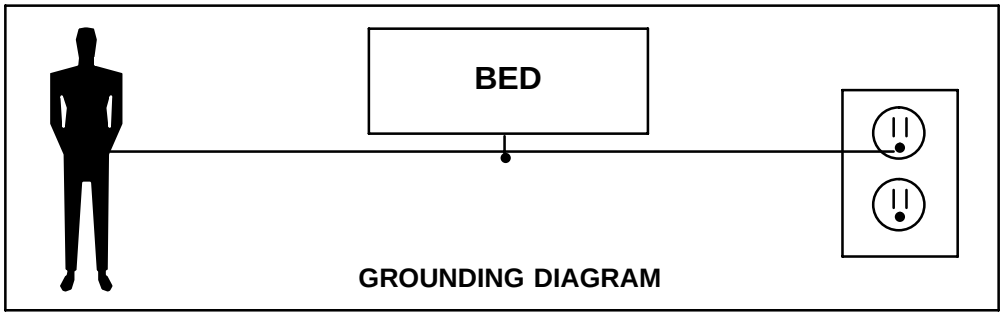

GROUNDING DIAGRAM

NOTE
See page 26 through page 33 for an outline of bed PCB's and voltage test points.

PROBLEM/FAILURE	RECOMMENDED ACTION
No power to bed	**A.** Verify the power cord connections at the wall and the bed. **B.** Check circuit breakers, under the litter/gatch section on the patient left side. If the circuit breaker is tripped, reset it by pushing in. **C.** Check for 120 VAC at J1 on the power supply, Pin 1 (brown) and Pin 2 (blue). **D.** Check for DC voltages on J2 (Pins 1, 2, 3 & 6) on power supply. See page 30 for power supply voltage test points. **a.** If voltage is present, check connector W on the CPU board and check for the same DC voltages. If OK, go to step E. **b.** If voltage is not present, unplug connector W on the CPU board and recheck for DC voltages at J2 on the power supply. **1.** If voltages come back, re−connect cable W to the CPU board, and go to step c. **2.** If DC voltage does not come back, replace the power supply. **c.** Unplug all connectors except for F, FF, O, and W from the CPU board and recheck voltages on connector W **1.** If DC voltages come back, plug the cable connections back in until problem comes back, isolate the problem to a component or assembly. **2.** If DC voltages do not come back, replace the CPU board **E.** Check for 120 VAC at connector O on the CPU board. **a.** If voltage is present, replace the CPU board. **F.** Verify bed function and return to service.
No bed down motion.	**A.** Enter diagnostics, (see page 52) and press bed down. **a.** If motion is not present, verify there is a two−pin shunt present on connector Z, closest to the center of the bed, if not, install shunt. **1.** Test bed down motion, if motion is present then go to step D. **b.** If motion is present, re−burn lift potentiometer limits, see page 45 for procedure. **B.** Check for 5 VDC on TP 9 (HL) and TP 7 (FL) referencing ground test point while pressing bed down. **a.** If 5 VDC is present, go to step C. **b.** If 5 VDC is not present, replace CPU board. **C.** Check for 120 VAC power on connector N (HL) and G (FL), pin 1 (white) and pin 3 (black), of the CPU board, while pressing bed motion up. **a.** If voltage is not present, replace CPU board. **b.** If voltage is present: **1.** Verify the motors are running, if so, replace lift couplers. **2.** If motors are not running, check voltage at motor connection. **3.** If voltage is present at motor, check capacitors or motors. **D.** Verify bed function and return to service.

PROBLEM/FAILURE	RECOMMENDED ACTION
No bed up motion.	**A.** Enter diagnostics, (see page 52) and press bed up. **a.** If motion is not present, go to step B. **b.** If motion is present, reburn lift potentiometer limits, see page 45 for procedure. **B.** Check for 5VDC on TP 10 (HL) and TP 8 (FL) on the CPU board referencing ground test point while pressing bed up. **a.** If 5 VDC is present, go to step C. **b.** If 5 VDC is not present, replace CPU board. **C.** Check for 120 VAC power on connector N (HL) and G (FL), pin 1 (white) and pin 6 (red), of the CPU board while pressing bed motion up. **a.** If voltage is not present, replace CPU board. **b.** If voltage is present **1.** Verify the motors are running, if so, replace lift couplers. **2.** If motors are not running, check voltage at motor connection. **3.** If voltage is present at motor, check capacitors or motors. **D.** Verify bed function and return to service.
No Gatch down motion.	**A.** Check for 5VDC on TP 5 on the CPU board referencing ground test point while pressing gatch down. **a.** If 5 VDC is present, go to step B. **b.** If 5 VDC is not present, replace CPU board. **B.** Check for 120 VAC power on connector CC, pin 2 (red) and pin 3 (white), of the CPU board while pressing gatch down. **a.** If voltage is not present, replace the CPU board **b.** If 120 VAC is present, check the capacitor and motor. **C.** Verify bed function and return to service.
No Gatch up motion.	**A.** Check for 5 VDC on TP 6 on the CPU board referencing ground test point while pressing gatch up. **a.** If 5 VDC is present, go to step B. **b.** If 5 VDC is not present, replace CPU board. **B.** Check for 120 VAC on connector CC, pin 1 (black) and pin 3 (white), of the CPU board while pressing gatch up. **a.** If voltage is not present, replace the CPU board **b.** If 120 VAC is present, check the capacitor and motor. **C.** Verify bed function and return to service.
No Fowler up/or uneven motion.	**A.** Check for 5 VDC on TP 3 on the CPU board **a.** If 5 VDC is present, go to step B. **b.** If 5 VDC is not present, replace CPU board. **B.** Check for 120 VAC on connector GG, Pin 1 (white) and pin 2 (black), of the CPU board while pressing Fowler up. **a.** If voltage is not present, replace the CPU board **b.** If 5 VDC is present, check the capacitor and motor. **C.** Refer to Fowler Mechanism Customer Guide (2030-009-028) **D.** Verify bed function and return to service.
No Fowler down/or uneven motion.	**A.** Check for 5VDC on TP4 on the CPU board **a.** If 5 VDC is present, go to step B. **b.** If 5 VDC is not present, replace CPU board. **B.** Check for 120 VAC on connector GG, Pin 1 (white) and pin 3 (red), of the CPU board while pressing Fowler up. **a.** If voltage is not present, replace the CPU board **b.** If 5 VDC is present, check the capacitor and motor. **C.** Refer to Fowler Mechanism Customer Guide (2030-009-028) **D.** Verify bed function and return to service.

OPTIONAL EPIC II+ BATTERY BACK−UP TROUBLESHOOTING GUIDE

This section of the troubleshooting guide includes the battery backup functions. When using this guide, assume the bed is functioning properly when powered by the AC line cord with the exception of the battery charging components.

PROBLEM/FAILURE	POSSIBLE CAUSE	RECOMMENDED ACTION
ON/OFF switch is in the on position but the power LED is off and the bed does not function.	No DC voltage from the batteries.	**A.** Check the circuit breakers at the head end of the bed. **B.** V erify the battery voltage is greater than 24 VDC. **C.** Check the battery fuse − replace if necessary (p/n 2040−1−802). **D.** Check the cable connections from the batteries to the display board. **E**. Check the ON/OFF switch and cabling.
ON/OFF switch is in the on position, the power LED is on, and the bed does not function.	Display board is not functioning or is locking out all functions.	**A.** Check the safety switches on the drive bar. **B.** V erify the battery voltage is greater than 24 VDC. **C.** Verify the display board is functioning. **D.** Check all cable connections on the display and power boards.
ON/OFF switch is in the on position, the power LED is on, and the bed does not function.	The thermostat on the inverter/ charger board has tripped, indicating a temperature above 110° C (230° F).	**A.** Wait approximately 3−5 minutes to allow the inverter/changer board to cool down.
The bed power cord is plugged in but the battery does not charge.	The battery charger is not functioning.	**A.** Check the circuit breakers on the litter. **B.** Check the battery charger. **C.** Check all cable connections on the charger.

INVERTER/CHARGER, BATTERY & ZOOM® TROUBLESHOOTING

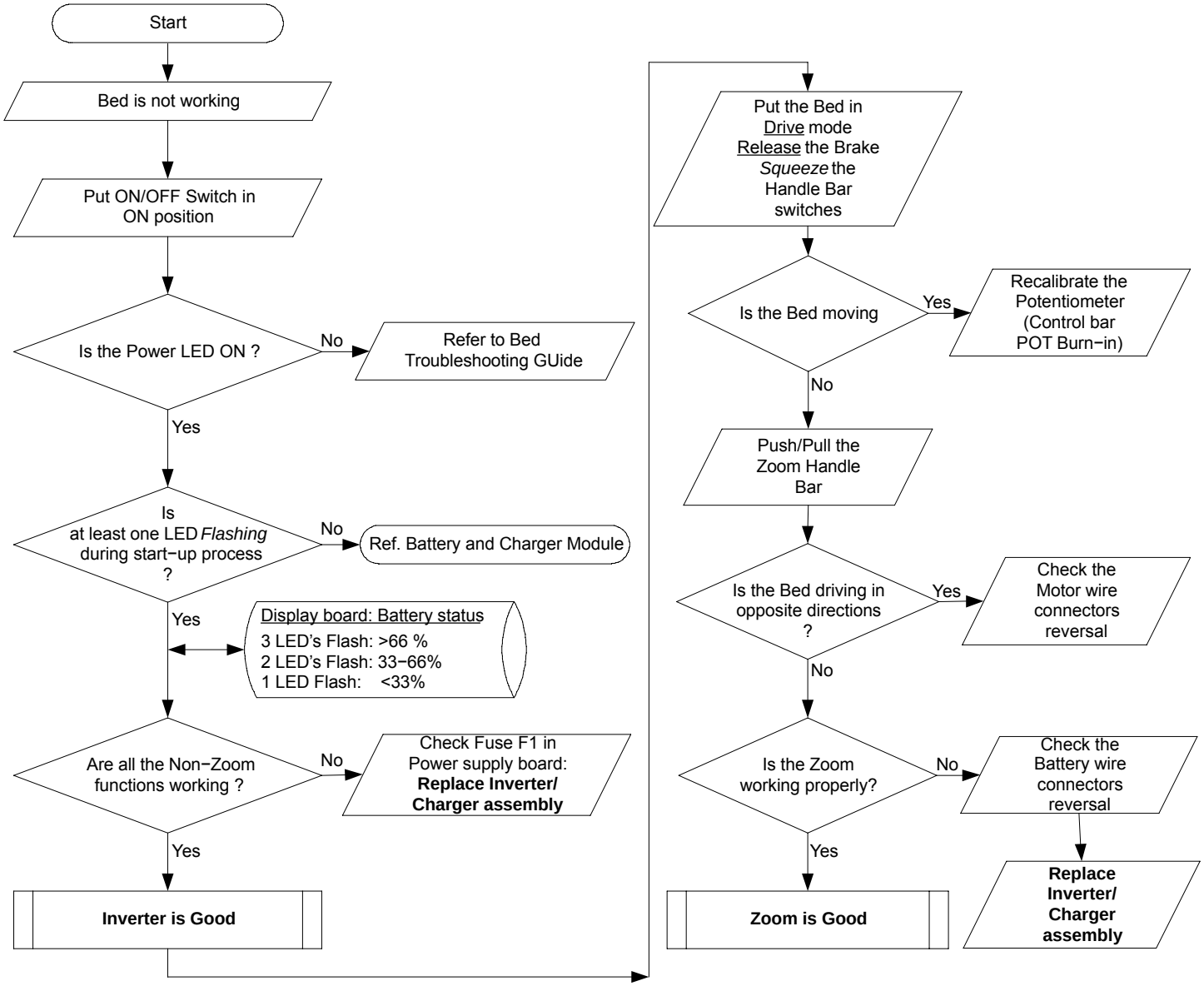

INVERTER/CHARGER, BATTERY & ZOOM® TROUBLESHOOTING

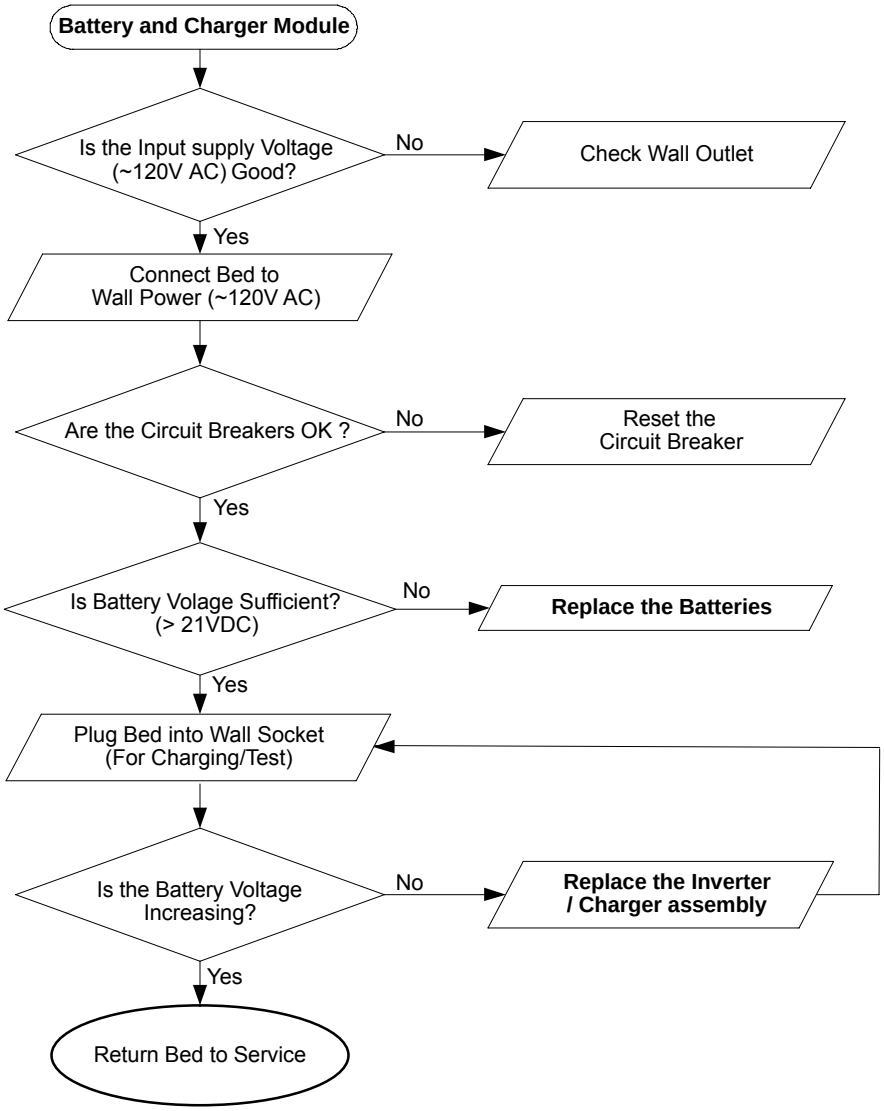

CPU BOARD − 3002−407−950

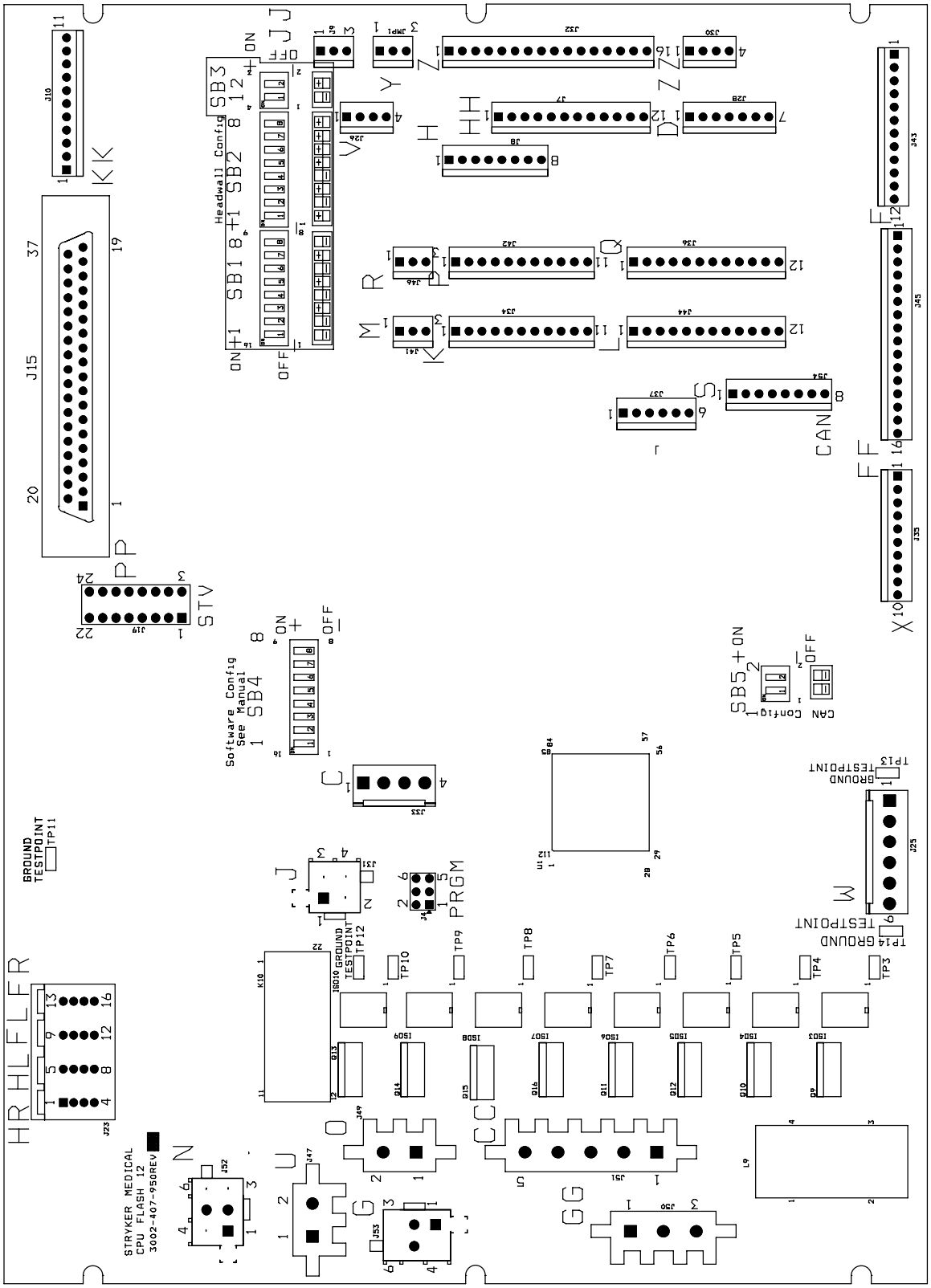

CPU BOARD − 3002−407−950

CABLE LOCATION	VOLTAGE	POSITIVE LEAD	NEGATIVE LEAD	DESCRIPTION
W	+12 VDC	Pin 1	Pin 4 or 5	Relays & Siderails Light Voltage
W	+5 VDC	Pin 2 & 3	Pin 4 or 5	+5 VDC from Power Supply
W	−12 VDC	Pin 6	Pin 4 or 5	Relays & Siderails Light Voltage
J	+5 VDC	Pin 4 (Green)	Pin 2 (Black)	+5 VDC for Head Lift Pot
J	1−5 VDC	Pin 3 (Red)	Pin 2 (Black)	Head Lift Pot Wiper
C	+5 VDC	Pin 1 (Blue)	Pin 2 (White)	+5 VDC for Foot Lift Pot
C	1−5 VDC	Pin 3 (Black)	Pin 2 (White)	Foot Lift Pot Wiper
GG	0 VAC w/o Switch 120 VAC w/Switch	Pin 1 (Black)	Pin 3 (White)	Gatch Up
GG	0 VAC w/o Switch 120 VAC w/Switch	Pin 2 (Red)	Pin 3 (White)	Gatch Down
CC	0 VAC w/o Switch 120 VAC w/Switch	Pin 2 (Black)	Pin 1 (White)	Fowler Up
CC	0 VAC w/o Switch 120 VAC w/Switch	Pin 3 (Red)	Pin 1 (White)	Fowler Down
O	110 VAC	Pin 1	Pin 2	Line Voltage to Bed
N	0 VAC w/o Switch 120 VAC w/Switch	Pin 3 (Black)	Pin 1 (White)	Head Lift Down
N	0 VAC w/o Switch 120 VAC w/Switch	Pin 6 (Red)	Pin 1 (White)	Head Lift Up
G	0 VAC w/o Switch 120 VAC w/Switch	Pin 3 (Black)	Pin 1 (White)	Foot Lift Down
G	0 VAC w/o Switch 120 VAC w/Switch	Pin 6 (Red)	Pin 1 (White)	Foot Lift Up
ZZ	+5 VDC	Pin 1 (Red)	Pin 4 (Black)	+5 VDC for Fowler Pot
ZZ	1−5 VDC	Pin 3 (Green)	Pin 4 (Black)	Fowler Pot Wiper
V	9 VDC	Pin 2 (Red)	Pin 1 (Black)	Nurse Call Backup Battery
JJ	12 VDC when Bed Exit is Alarming	Pin 1 (Red)	Pin 2 (Black)	Bed Exit Beeper

SOFTWARE CONFIGUVRATION

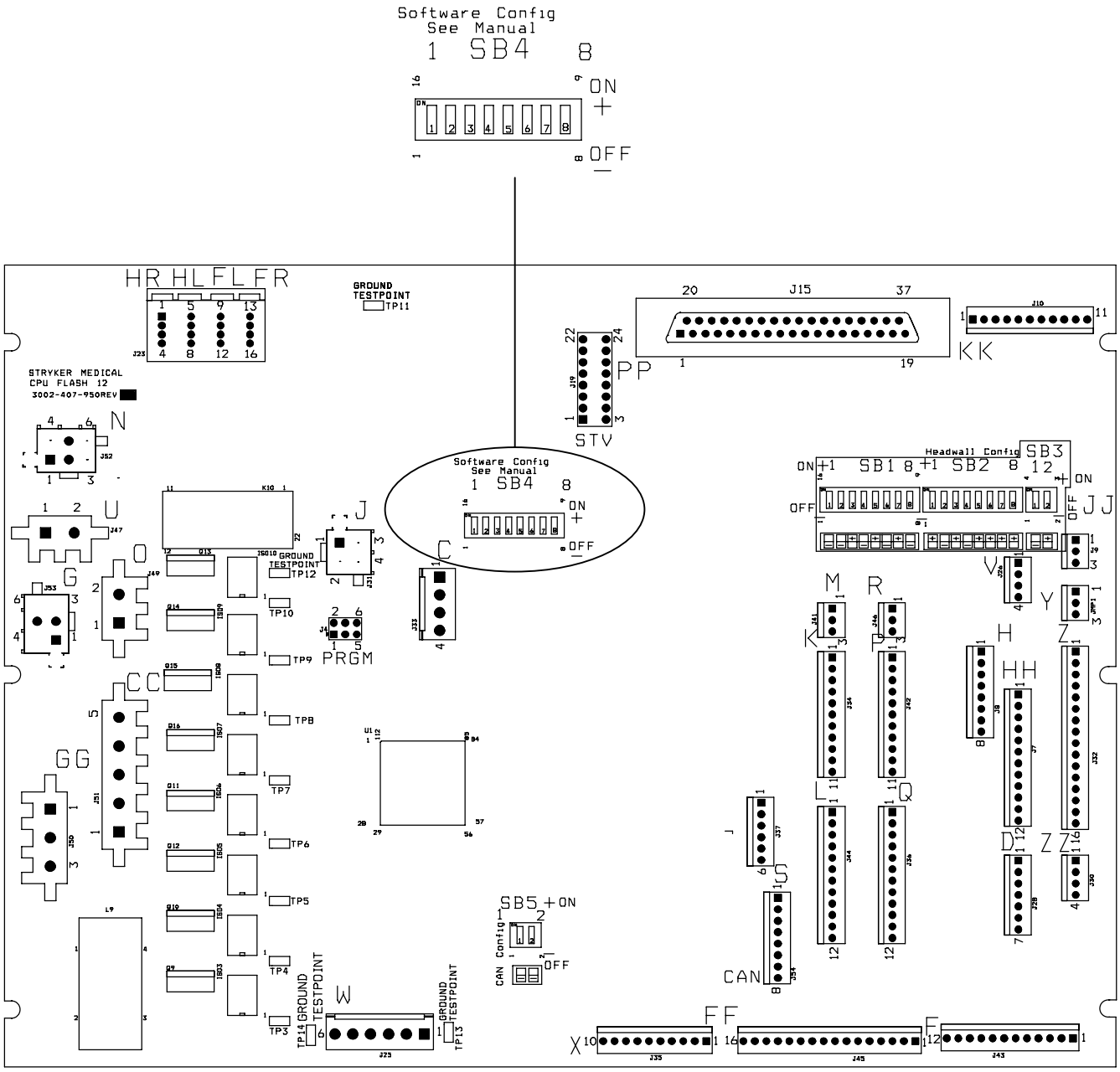

1. Locate switch bank 4, labeled SB4 on the CPU board (see above).
2. Move the switches to the appropriate positions for the specific bed (see page 29.)
3. To verify the switch settings, check what the foot board LCD displays in the burn−in mode. For beds with a scale system, select software config. in the diagnostic mode.

SOFTWARE CONFIGURATION (CONTINUED)

	FUNCTIONAL TEST
	ICU−KCI
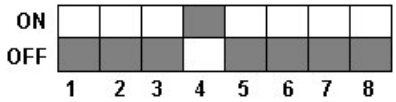	ICU−STANDARD BED
	ICU−ZOOM / STANDARD BED
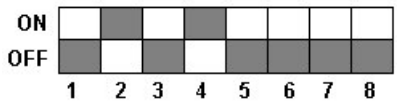	ICU−ZOOM / SCALE / BEDEXIT
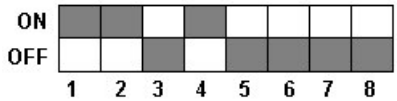	ICU−ZOOM / SCALE / ZONE CONTROL BEDEXIT
	ICU−SCALE / BEDEXIT
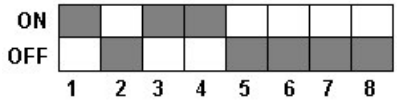	ICU−SCALE / ZONE CONTROL BEDEXIT

POWER SUPPLY − P/N 59−157

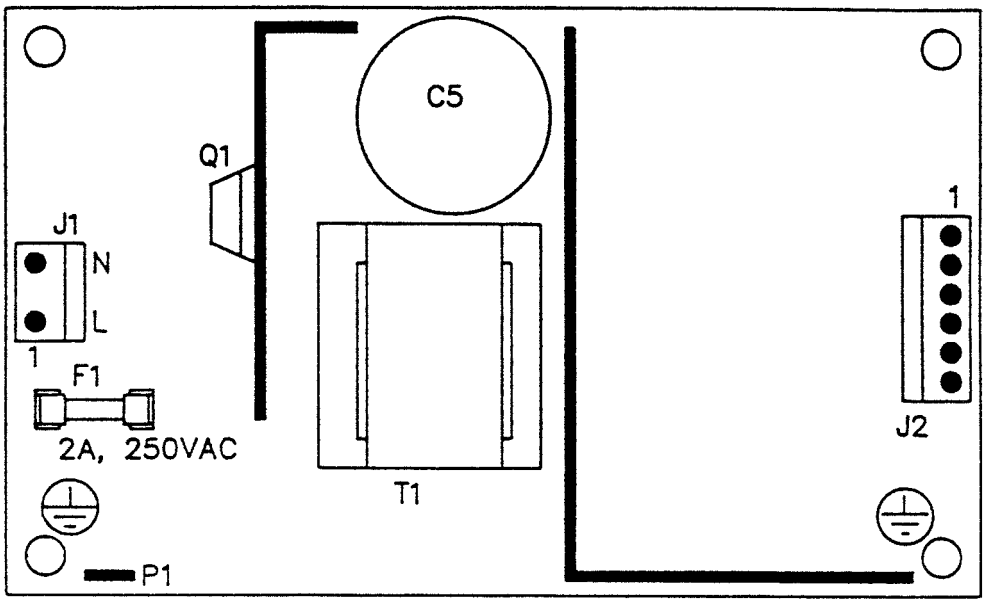

CONNECTOR LOCATION	VOLTAGE	POSITIVE LEAD	NEGATIVE LEAD
J1	110V	Pin 1	Pin 2
J2	12V	Pin 1	Pin 4 or 5
J2	5V	Pin 2	Pin 4 or 5
J2	5V	Pin 3	Pin 4 or 5
J2	GND	Pin 4	Pin 4 or 5
J2	GND	Pin 5	Pin 4 or 5
J2	−12V	Pin 6	Pin 4 or 5

OPTIONAL EPIC II+ INVERTER/CHARGER BOARD − PART NUMBER 2030−1−30

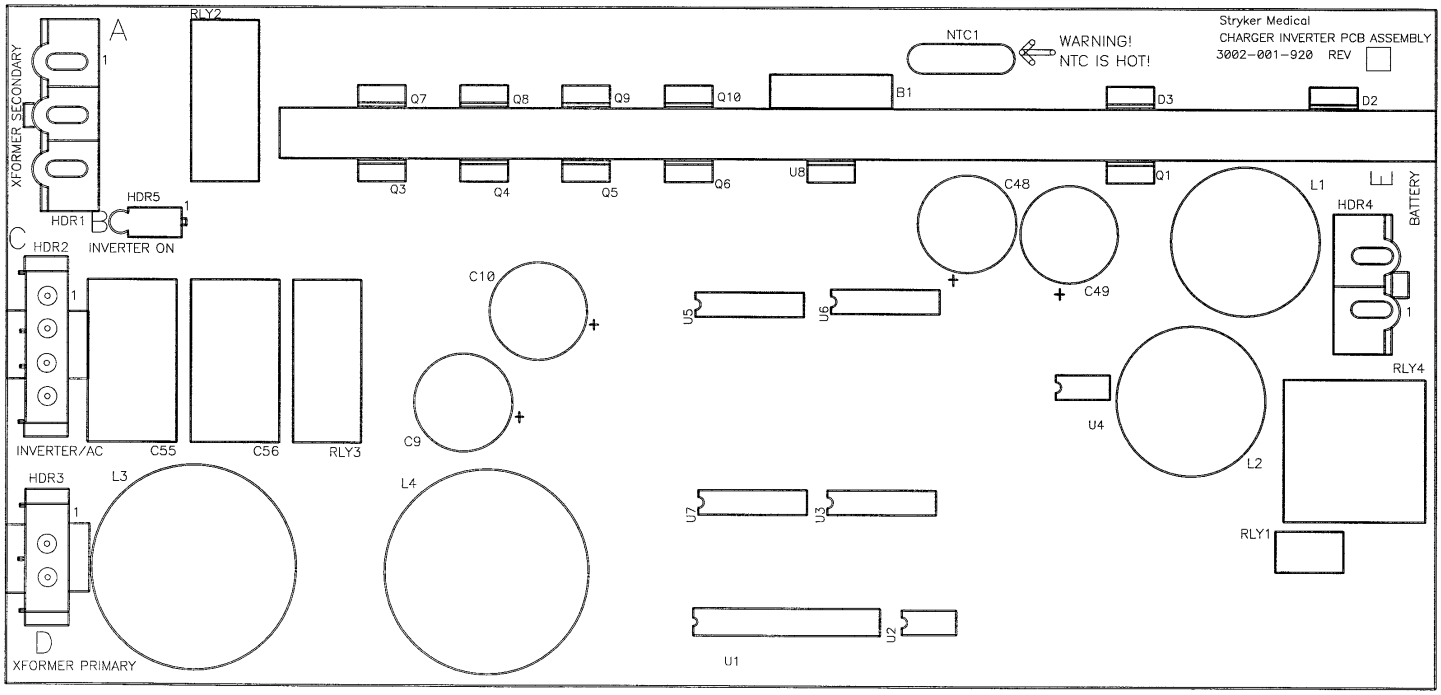

CONNECTOR LOCATION	VOLTAGE	POSITIVE LEAD	NEGATIVE LEAD	DESCRIPTION
HDR 4	26 VDC	Pin 2 Red	Pin 1 Black	From Battery − unplugged
HDR 1	22 VAC	Pin 3 Red	Pin 2	Secondarys from Transformer − plugged in
HDR 1	34 VAC	Pin 1 Green	Pin 2 Brown	Secondarys from Transformer − plugged in
HDR 2	110−140 VAC	Pin 4 Brown	Inverter Module Pin 3 Blue	Unplugged
HDR 2	110 V	Pin 2 Brown	Pin 1 Blue	From Wall − plugged in
HDR 3	120 V	Pin 2	Plug−In Pin 1	Wall Voltage − plugged in

OPTIONAL EPIC II+ DISPLAY/CPU − P/N 2030−31−910

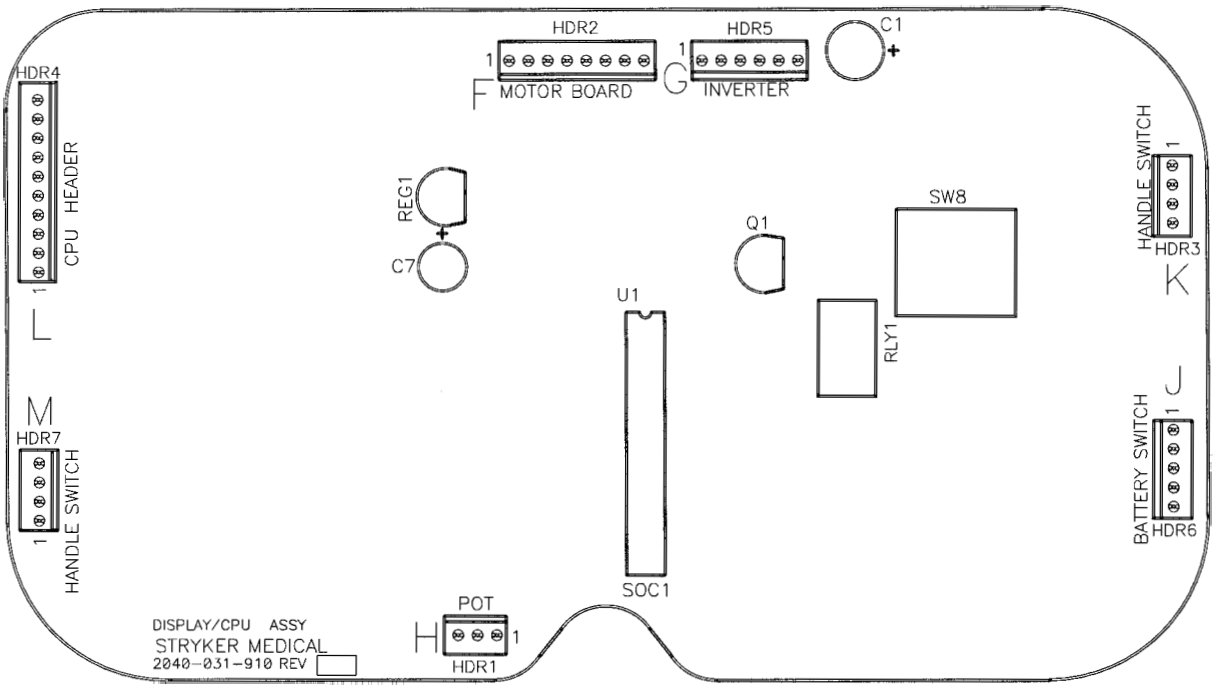

CONNECTOR LOCATION	VOLTAGE	POSITIVE LEAD	NEGATIVE LEAD	DESCRIPTION
HDR 1 (H)	0−5VDC	Pin 1	Pin 2	Control Pot Wiper Voltage (with Switch On)
HDR 6 (J)	Battery voltage around 26VDC	Pin 1	Pin 5	Battery Voltage Return from On/Off Switch (with Switch On)
HDR 4 (L)	5VDC	Pin 9	Pin 1	Voltage from CPU
HDR 1	5VDC	Pin 1	Pin 3	DC Voltage to Pot
HDR 7	Continuity	Pin 1	Pin 4	Right Hand Switch
HDR 3	Continuity	Pin 1	Pin 4	Left Hand Switch
HDR 2	26VDC	Pin 3	Pin 1	Battery Voltage

OPTIONAL EPIC II+ AC CROSSOVER BOARD − P/N 2040−31−900

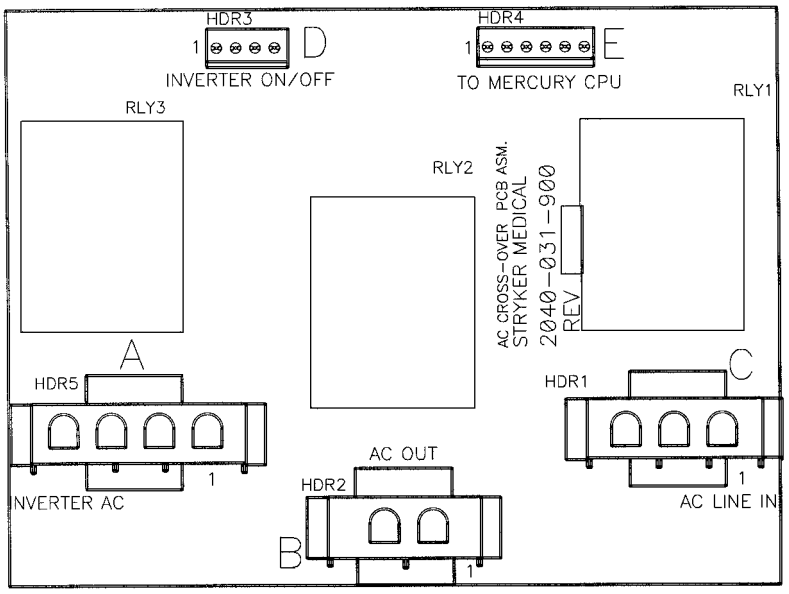

CONNECTOR LOCATION	VOLTAGE	POSITIVE LEAD	NEGATIVE LEAD	DESCRIPTION
HDR 5 (A)	120VAC	Pin 4	Pin 1	AC Input to Board from the Inverter with the Power Cord Unplugged
HDR 1 (C)	120VAC	Pin 3	Pin 1	AC Input to Board from the Wall Receptacle
HDR 2 (B)	120VAC	Pin 2	Pin 1	AC Output of Board to Main Power
HDR 4 (E)	+5VDC	Pin 4	Pin 1	+5VDC when AC is Unplugged from the Wall Receptacle

OPTIONAL INVERTER PROTECTION FEATURES

The optional Epic+ inverter has several features to prevent internal damage:

1. Low Battery Voltage − If the battery voltage at the inverter drops below the low voltage cut−off, the inverter will shut off.
2. Over−Temperature − If the inverter gets too hot, it will shut off. The overheating may be caused by high ambient temperature, blocked air flow or an overload condition. When the inverter reaches an acceptable temperature, it will restart.
3. Over−Power − The inverter will source up to its maximum power rating. If the load requires more, the output voltage will shut down. Turning the power switch off and on will reset the inverter. Plugging the bed power cord into the wall socket to charge the battery will reset the inverter.

⚠ **WARNING**

The inverter generates 115VAC, the same as a wall receptacle. To prevent injury, do not put anything into the electrical outlets other than an appliance power cord. Keep the outlets covered when not in use. Do not submerge the unit or subject it to moisture.

Notes

Electrical System Information

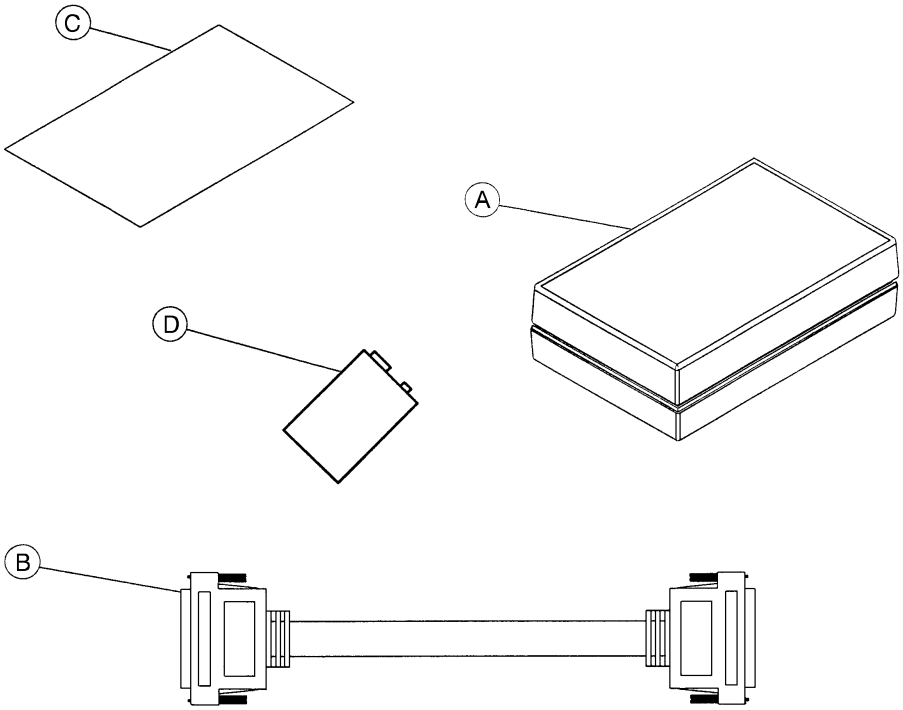

Item	Part No.	Part Name	Qty.
A	3002−45−805	BCT Unit	1
B	3001−303−825	37−Pin Cable	1
C	3002−45−806	Instructions	1
D	3000−303−871	9V Battery	1

37−PIN CONNECTOR

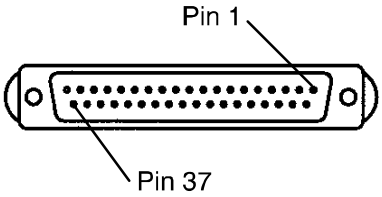

Pin 1	Option 2 Common
Pin 2	Read Light
Pin 3	Room Light
Pin 4	Speaker High
Pin 5	Pot Wiper
Pin 6	Radio Common
Pin 7	Nurse Call Interlock
Pin 8	Audio Transfer −
Pin 9	Audio Transfer +
Pin 10	Interlock +
Pin 11	Interlock −
Pin 12	Spare
Pin 13	Options 3 Common
Pin 14	Pot Low Common
Pin 15	Pot High Common (Std.)/Audio (STV)
Pin 16	Nurse Answer Light +
Pin 17	Option 1 NO/NC
Pin 18	Option 1 Common
Pin 19	Nurse Call Light +
Pin 20	Option 2 NO/NC
Pin 21	Option 3 NO/NC
Pin 22	Option 3A NO/NC
Pin 23	Option 2A Common
Pin 24	Option 2A NO/NC
Pin 25	Nurse Call +
Pin 26	Nurse Call NO/NC
Pin 27	Room/Read Light Common
Pin 28	Nurse Call Light −
Pin 29	Nurse Answer Light −
Pin 30	Priority NO/NC
Pin 31	Priority Common
Pin 32	Option 3A Common
Pin 33	TV − (Std.)/Data (STV)
Pin 34	TV + (Std.)/ (STV)
Pin 35	Speaker Low Common
Pin 36	Audio Shield
Pin 37	Radio NO/NC

STRYKER PENDANT PORT

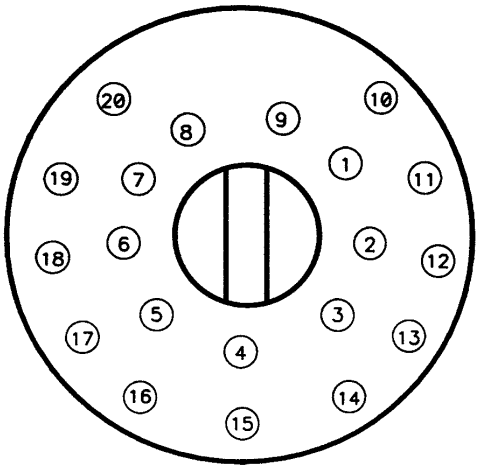

1	Scan Line
2	Audio (−)
3	Nurse Call (+)
4	+5 VDC
5	Scan Line
6	Scan Line
7	Nurse Call (−)
8	TV Channel Up
9	Backlight
10	Audio (+)
11	Gatch Up/Fowler In/Foot Up/DMS Firm
12	Gatch Down/Fowler Out/Foot Out/DMS Soft
13	Fowler Up/Trend In
14	Fowler Down/Trend Out
15	Audio Shield
16	Not Used − Socket Filled
17	Bed Up
18	Ground
19	Read Light/Bed Down
20	Room Light

Quick Reference Replacement Parts List

ELECTRICAL COMPONENTS

AC CROSSOVER BOARD (EPIC II+ OPTION)	2040−31−900
CPU KIT	3002−407−950
DISPLAY/CPU BOARD (EPIC II+ OPTION)	2030−31−910
FOOT BOARD KEYBOARD (S/R LIGHTS, LOCKOUTS, ETC.)	3001−500−930
FOOT BOARD SCALE DISPLAY	3001−507−900
FOOT BOARD SCALE KEYBOARD	3001−507−910
FOOT BOARD BED EXIT KEYBOARD	3001−508−900
INVERTER/CHARGER BOARD	3002−1−30
POWER SUPPLY	59−157

SIDERAIL BOARDS

INSIDE BOARD	3001−400−930
OUTSIDE BOARD	3001−400−910
SPEAKER W/CABLE	3000−403−831

OTHER COMPONENTS

BATTERY KIT	2040−700−13
CAPACITOR, FOWLER & GATCH	59−779
CAPACITOR, FOWLER & GATCH, 230V	59−153
CAPACITOR, FOWLER & GATCH, JAPAN OPTION	59−207
CAPACITOR, LIFT	59−778
CAPACITOR, LIFT, 230V	3221−200−243
CAPACITOR, LIFT, JAPAN OPTION	59−140
CASTER, 6”	3001−200−60
CASTER, STEER, 6”	3001−200−50
CASTER, 8”, OPTIONAL	3001−200−90
CASTER, STEER, 8”, OPTIONAL	3001−200−80
COIL CORD, LIFT POWER	3001−200−864
COIL CORD, LIFT SENSOR	3001−200−815
COMMUNICATIONS TESTER	3001−303−165

OTHER COMPONENTS (CONTINUED)

FOOT PROP RETROFIT KIT	2030−700−16
ISOLATION PLATE KIT, LIFT MOTOR	3000−200−723
LOAD CELL	3002−307−57
MOTOR COUPLER KIT, LIFT	3000−200−725
MOTOR, FOWLER & GATCH W/CLUTCH	3001−300−705
MOTOR, FOWLER & GATCH W/CLUTCH, 230V	3221−300−705
MOTOR, LIFT (SAME FOR HEAD AND FOOT END)	3000−200−213
MOTOR, LIFT, 230V (SAME FOR HEAD AND FOOT END)	3221−200−213
PAINT, TOUCH−UP, OPAL, BOTTLE W/BRUSH	7000−1−321
PAINT, TOUCH−UP, OPAL, SPRAY CAN	7000−1−318
POTENTIOMETER, FOOT END	3001−200−230
POTENTIOMETER, FOWLER W/CABLE	2035−32−803
POTENTIOMETER, HEAD END	3001−200−240
POWER CORD	39−254
SIDERAIL COVER, RIGHT (Outside US and Canada)	3000−336−11
SIDERAIL COVER, LEFT (Outside US and Canada)	3000−336−12
SIDERAIL COVERS (SET OF FOUR) (Outside US and Canada)	2040−130
SINGLE TUBE OF GREASE	3000−200−700

BRAKE PEDAL REPLACEMENT

Required Tools:

5/16” Hex Allen Wrench	Torque Wrench	Loctite 242
Hammer	Punch	#2 Phillips Screwdriver
Bungee Cords (or Equivalent)		

Procedure:

4. Raise the litter to the full up position.
5. Unplug the bed power cord from the wall socket.
6. Using a #2 Phillips screwdriver, remove the three screws holding both the head end and the foot end upper lift covers. If you want, hold the covers out of the way by using bungee cords (or the equivalent) to secure them to the litter top.
7. Using a 5/16” hex Allen wrench, remove the two bolts holding the brake pedal to the brake rod.
8. Using a hammer and punch, remove the roll pins holding the brake shaft crank to the brake rod on both the head and the foot end.
9. Push the brake rod through the frame until the brake pedal is clear. Remove the brake pedal.
10. Reverse the above steps to attach the new brake pedal.

NOTE

Use Loctite 242 when reinstalling the bolts and torque the bolts to 25 foot−pounds.

LIFT MOTOR AND CAPACITOR REMOVAL AND REPLACEMENT

Required Tools:

3/8” Socket Wrench w/Extension	5/16” Socket Wrench	Floor Jack
Side Cutters	7/16” Open End Wrench	2x4 (or Equivalent)

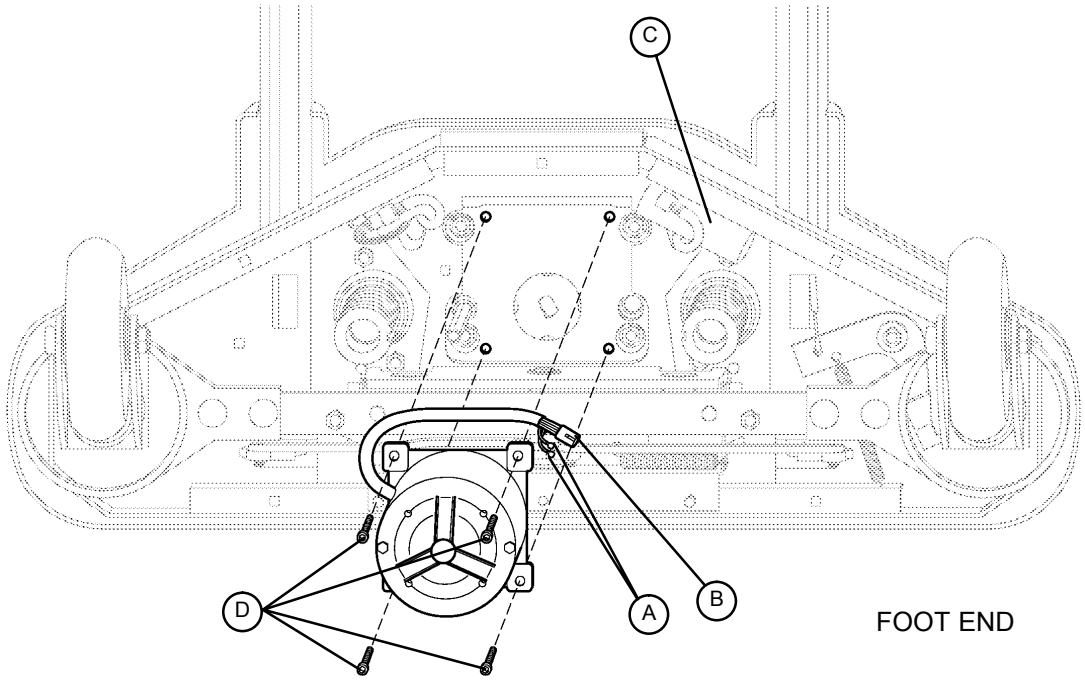

Procedure:

NOTE
If you need more space to work under the base frame, place a 2x4 across the base frame rails and use a floor jack to raise the base frame off the floor.

1. Unplug the bed power cord from the wall socket. Using a 5/16” socket wrench, remove the five bolts holding the lower lift cover to the base and remove the cover.
2. Disconnect the two connectors (A) at the motor capacitor.
3. Disconnect the white connector (B) from the power cord.
4. Using side cutters, cut the cable ties holding the capacitor (C) to the base and remove the capacitor.
5. Using a 3/8” socket wrench, remove the four screws (D) holding the motor assembly in the lift housing and remove the motor assembly.
6. Reverse the above steps to install the new motor.

NOTE
The drive shaft on the new motor probably will have to be turned to be aligned with the coupler. Use a 7/16” open end wrench to turn the drive shaft of the motor.

The procedure for lift motor and capacitor removal and replacement is the same for both ends of the bed.

LIFT HOUSING REMOVAL AND REPLACEMENT

Required Tools:

#2 Phillips Screwdriver	Bungee Cord (or Equivalent)	5/16” Socket Wrench
Side Cutters	9/16” Socket Wrench	Floor Jack
7/32” Hex Allen Socket Wrench	Sawhorses (or Equivalent)	2x4 (or Equivalent)
3/8” Socket Wrench (w/ 6” extension)		

Procedure:

NOTE
If you need more space to work under the base frame, place a 2x4 across the base frame rails and use a floor jack to raise the base frame off the floor.

1. Unplug the bed power cord from the wall socket.
2. Using a 5/16” socket wrench, remove the five bolts holding the lower lift cover to the base and remove the cover.
3. Using a #2 Phillips screwdriver, remove the three screws holding the upper lift cover to the base. If you want, hold the covers out of the way by using bungee cords (or the equivalent) to secure them to the litter top.
4. Remove the lift motor and capacitor (refer to procedure on page 41).
5. Remove lift potentiometer (refer to procedure on page 44).
6. Using a 5/16” socket wrench, remove the cable clamps holding the power and sensor coil cords on top of the lift housing assembly. Cut the cable ties and disconnect the coil cords from under the lift housing. The power and sensor coil cords are now free of the lift housing assembly. Drape them up out of the way.
7. Using a 7/32” hex Allen socket, remove the two screws holding the lift screws to the header crossbar plate.
8. Lift the litter top up and support it about 6” above the lift screws with sawhorses or the equivalent.

LIFT HOUSING REMOVAL AND REPLACEMENT (CONTINUED)

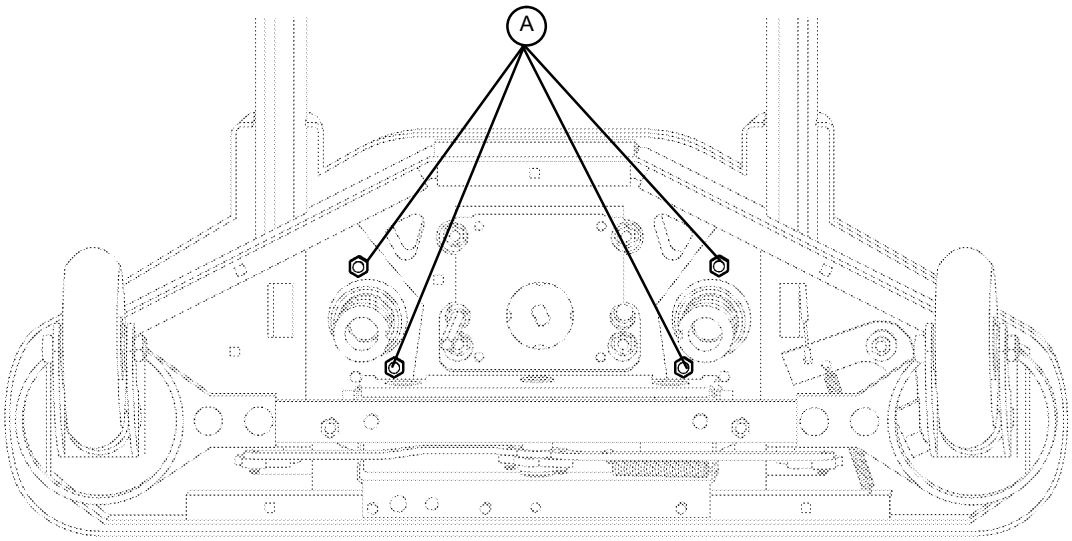

FOOT END − BOTTOM VIEW

9. Under the base, using a 9/16” socket, remove the four nuts (A) holding the lift housing to the base.
10. Lift up and out on the lift housing assembly to remove it from the base.

⚠ CAUTION

To ensure proper reattachment of the power and sensor coil cords, refer to the procedure on page 47. Refer to the procedure on page 44 for reattachment of the lift potentiometer.

11. Reverse the above steps to reinstall the lift housing assembly after service is completed.

NOTE
The procedure for lift housing removal and replacement is the same for both ends of the bed.

LIFT POTENTIOMETER REPLACEMENT AND ADJUSTMENT

Required Tools:

#2 Phillips Screwdriver	Bungee Cord (or equivalent)	5/16” Socket Wrench
3/8” Open End Wrench	Side Cutters	

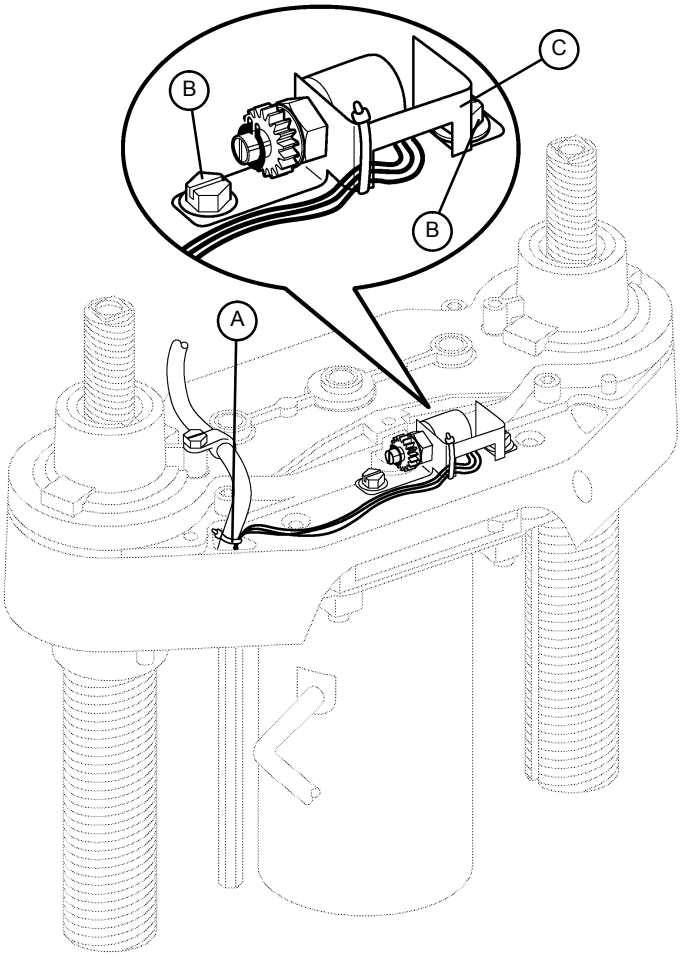

Procedure:

1. Raise the litter to the full up position.
2. Unplug the bed power cord from the wall socket.
3. Using a 5/16” socket wrench, remove the five bolts holding the lower lift cover to the base and remove the cover.
4. Using a #2 Phillips screwdriver, remove the three screws holding the upper lift cover to the base. If you want, hold the covers out of the way by using bungee cords (or the equivalent) to secure them to the litter top.
5. Using side cutters, cut the cable tie (A) holding the pot cable to the coil cord.
6. Unplug the pot cable from the sensor coil cord. If replacing a pot at the head end of the bed, unplug the cables attached to the brake sensor switch.
7. Pull the pot cable up through the base.
8. Using a 3/8” open end wrench, remove the two bolts (B) holding the pot housing (C) to the lift housing.

LIFT POTENTIOMETER REPLACEMENT AND ADJUSTMENT (CONTINUED)

9. Lift up and out on the pot housing assembly to remove it from the lift housing.
10. Before installing the new pot on the bed, turn it clockwise until it stops. T urn it back counterclockwise two full (360°) revolutions. This allows a ”window” position for proper upper and lower limits.
11. Reverse steps 4−8 to install the new pot and pot housing assembly.
12. After installing the new pot, the “burn−in” procedure must be followed.

NOTE
Be sure to maintain the pot position while installing.

LIFT POTENTIOMETER “BURN−IN” PROCEDURE

NOTE
It requires **two people** to enable the diagnostics mode for the bed.

1. Unplug the bed power cord from the wall socket.
2. On the foot board control panel, hold down the bed motion lock button and the button to lock out the side-rail controls for the knee. While still holding the buttons, plug the bed power cord into the wall socket. Release the foot board buttons. The siderail control lights LED should be flashing to indicate the bed is in diagnostics mode.
3. To “burn in” the Bed Up/Down limits, raise the bed completely up until it can’t go any farther. Press and hold the “Bed Motion Lock” button. The “Bed Motion Lock” LED will light. Continue to hold the “Bed Motion Lock” button until the“Bed Motion Lock” LED flashes. The flashing LED indicates the limits have been set. Release the“Bed Motion Lock” button and unplug the power cord from the wall socket to complete the “burn in” mode.
4. Plug the power cord into the wall socket and verify the lift limits are set properly before returning the bed to service.
5. If your bed has an IV Caddy, a lower limit must be burned in. Run the litter down to 19.5 inches. Hold the Bed Up/Down Lock button until the light flashes.

⚠ **CAUTION**

Do not run the litter all the way down while in the diagnostics mode. Damage to the botton lift covers could result.

LIFT MOTOR COUPLER REPLACEMENT

Required Tools:

5/16” Socket Wrench
3/8” Socket Wrench (w/6” Extension)
Floor Jack
2x4 (or Equivalent)

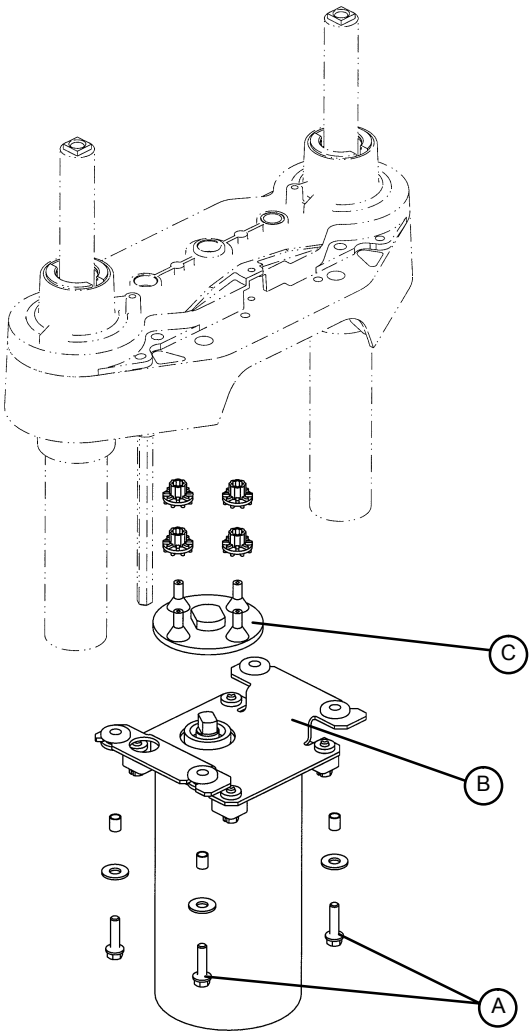

Procedure:

NOTE
If you need more space to work under the base frame, place a 2x4 across the base frame rails and use a floor jack to raise the base frame off the floor.

1. Unplug the bed power cord from the wall socket.
2. Using a 5/16” socket wrench, remove the five bolts holding the lower lift cover to the base and remove the cover.
3. Using a 3/8” socket with an extension, remove the four bolts (A) holding the isolation plate (B) to the lift housing and lower the lift motor and isolation plate assembly to allow access to the coupler (C).
4. The motor coupler can now be removed from the lift housing.
5. Reverse the above steps to install the new motor coupler and bushings.

POWER AND SENSOR COIL CORD REPLACEMENT

Required Tools:

#2 Phillips Screwdriver	Side Cutters	5/16” Socket Wrench
Bungee Cord (or equivalent)	5/16” Nut Driver	Floor Jack
2x4 (or Equivalent)		

Procedure:

NOTE
If you need more space to work under the base frame, place a 2x4 across the base frame rails and use a floor jack to raise the base frame off the floor.

1. Unplug the bed power cord from the wall socket.
2. Using a 5/16” socket wrench, remove the five bolts holding the lower lift cover to the base and remove the cover.
3. Using a #2 Phillips screwdriver, remove the three screws holding the upper lift cover to the base. If you want, hold the covers out of the way by using bungee cords (or the equivalent) to secure them to the litter top.
4. Using side cutters, cut the cable ties holding the power and sensor coil cords to the base. Remove the ground wire coming from the sensor cord that is attached to the base (note the star washer arrangement).
5. Disconnect the cables going to the motor and the lift potentiometer (at the head end, the sensor cord is also attached to the brake switch sensor).
6. Pull both cords up through the frame of the bed and the lift housing.
7. Using a 5/16” socket wrench, remove the two screws (A) holding the cable clamps* to the top of the lift housing.
8. Using a 5/16” socket wrench, remove the two screws (B) securing the cable clamps* to the underside of the header crossbar assembly.
9. Pull both coil cords up through the header crossbar assembly.
10. Disconnect the power and sensor coil cords from the connectors.
11. The cords should now be completely removed from the bed. Reverse the above steps to install the new power and sensor cords.*

⚠ **CAUTION**

* When replacing the power and sensor coil cords, secure the cable clamps to the cords at the first coil both on the top and on the bottom to ensure there is not too much slack in the cords between the top of the lift housing assembly and the bottom of the header crossbar. Be sure the clamps are fastened at exactly the correct angle, as shown by the arrows in the illustration. Arrange the cords exactly as shown in the illustration (left in front of right). **If this is not done correctly, damage to the cords will result.**

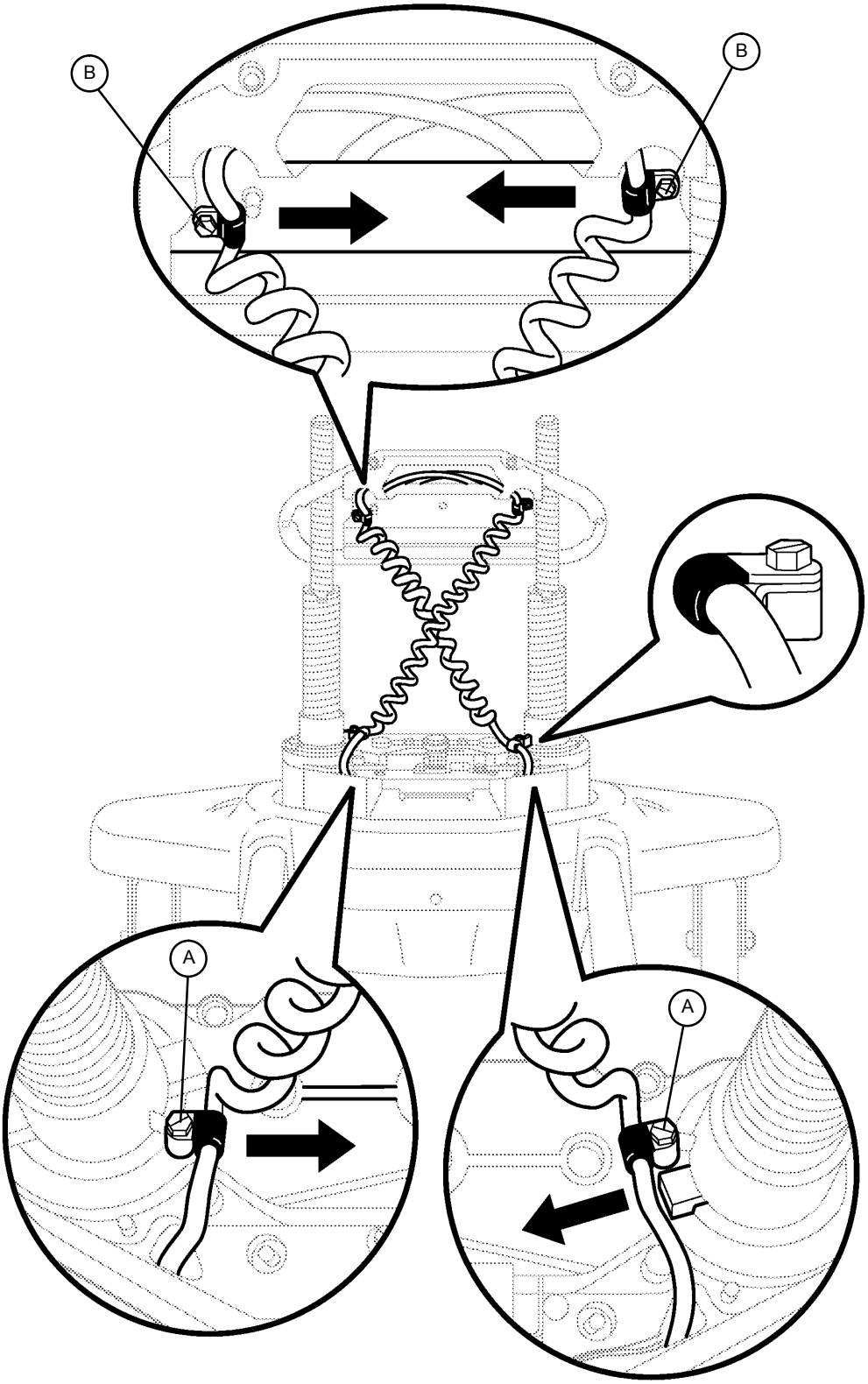

VIEW FROM CENTER OF BED

OPTIONAL BATTERY REMOVAL AND REPLACEMENT

Required Tools:

Torx T27	7/16” Wrench
1/2” Socket Wrench	Bungee Cords
Phillips Screwdriver	
5/32” Allen Wrench	

Procedure:

1. Raise the litter to full up. Unplug the power cord from the wall socket and push the battery power on/off switch to the “OFF” position.
2. Using a Phillips screwdriver, remove the four screws holding the base hood to the base frame.
3. Lift the base hood and support it from the litter frame using bungee cords or the equivalent.
4. Properly ground yourself (see page 20 for static discharge precautions).
5. Open the cable clamp at the head end, left side of the base frame and remove the cables from the clamp.
6. Using a Torx T27, remove the four screws (A) holding the electronics box cover and remove the cover.
7. Disconnect the two battery cables (B).

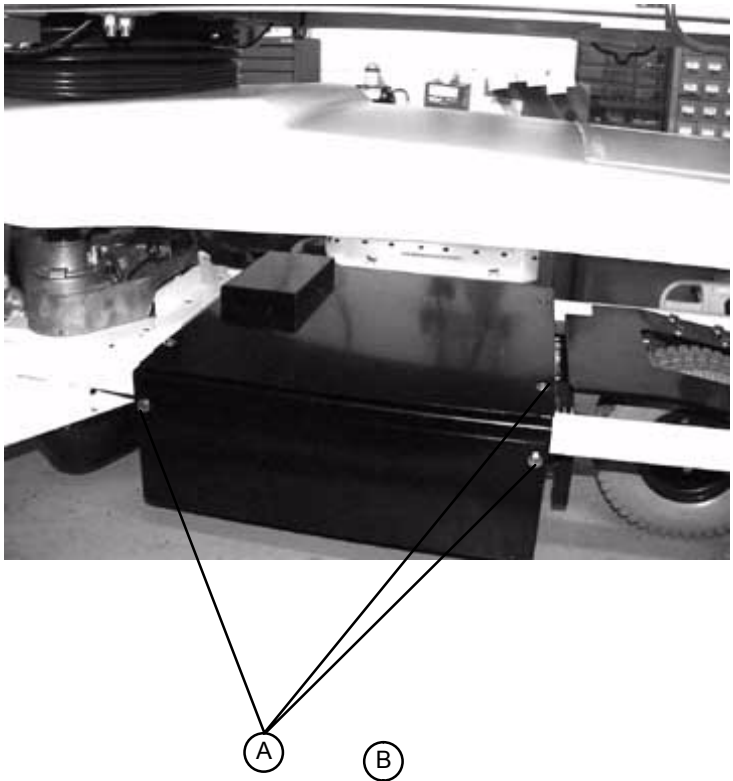

⚠ WARNING

The battery tray assembly weighs 50 pounds. Use caution when removing the two hex head screws securing it to the base frame or personal injury could result. Battery posts, terminals and related accessories contain lead and lead compounds, chemicals known to the State of California to cause cancer and birth defects or other reproductive harm. **Wash hands after handling.** Properly dispose of the old battery in accordance with local regulations.

8. Support the battery tray assembly from the bottom. Using a 7/16” hex socket or wrench, remove the two screws (C) supporting the battery tray.

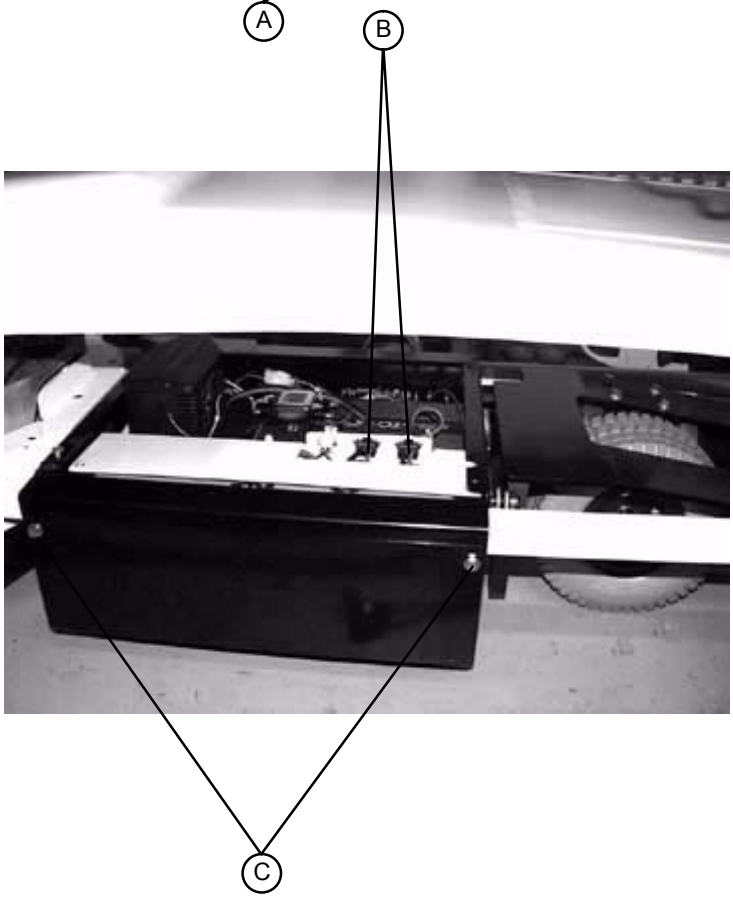

OPTIONAL BATTERY REMOVAL AND REPLACEMENT (CONTINUED)

9. The back of the battery tray assembly has a lip which catches on the electronics box. Lift up and out to remove the battery tray assembly.
10. Using a Phillips screwdriver, remove the two screws holding the battery terminal to the battery tray assembly.
11. Using a 5/32” Allen wrench and a 7/16” wrench, remove the four screws and nuts holding the battery harness to the battery terminals.
12. Reverse steps 1 − 11 to install the new batteries. Complete the last four items of the set−up procedures on page 8.

SCALE SYSTEM DIAGNOSTICS AND CALIBRATION

Diagnostic Mode Functions:

1. ANGLE CALIBRATE − This may be required in the field to recalibrate the scale. Calibrate using 50 pounds.
2. DISP. CORNER LBS − This function displays the individual corner weights in **pounds** for each load cell and can be used to isolate a defective load cell.
3. DISP. CORNER CTS − This function displays the individual corner weights in **counts** for each load cell and can be used to isolate a defective load cell.
4. DISPLAY FACTORS – This function is used to see the scale calibration factors. This can be used to diagnose a bad scale calibration.
5. DISPLAY AVERAGES − This function is used to see the average weight in pounds each load cell has experienced.
6. DISPLAY MAXIMUMS − This function is used to see the maximum weight each load cell has experienced.
7. CLEAR STATISTICS − This function is used to clear the averages and maximums.
8. INIT TO DEFAULTS − This function is used to reset the scale factors back to defaults.
9. VIEW ERROR LOG − This function can be used to see a log of scale errors and the time they occurred.
10. LOCK/UNLOCK LBS/KG − This function can be used to lock out the ability to change weight units.
11. PICK EXIT ALARM − This function can be used to select a different bed exit alarm tone.
12. BRAKE ALARM OFF/ON − This function can be used to enable or disable an audible alarm when the brakes are not set. Not available for beds with Zoom or Battery Backup.
13. DEFAULT ANGLE − This function can be used to select the default angle displayed to either fowler or trend.
14. SOFTWARE CONFIG − This function can be used to see what the bed configuration is.
15. SOFTWARE VERSION − This function can be used to see what software version it is.
16. CALIBRATE SCALE − This is the old scale calibration routine with 200 pounds. Only there for backup purposes.
17. EXIT DIAGNOSTIC − This function will give you the ability to exit the diagnostic mode and go into scale mode.

Diagnostic Mode:

NOTE
It requires **two people** to enable the diagnostic mode for the scale system.

1. To enter diagnostic mode, unplug the bed's power cord from the wall socket.
2. Press and **hold down** the LBS/KGS button.
3. While still holding the LBS/KGS button, plug the bed's power cord into the wall socket.
4. After two seconds, release the LBS/KGS button. The LCD should display "ANGLE CALIBRA TE". The diagnostic mode is now active.

SCALE SYSTEM DIAGNOSTICS AND CALIBRATION (CONTINUED)

Displaying Individual Load Cell Outputs:

A defective load cell can be detected by entering diagnostics and displaying individual load cell outputs.

1. Enter the diagnostic mode. The LCD will display “ANGLE CALIBRATE” when the diagnostic mode is activated.
2. Repeatedly press and release the up or down arrow button (ZERO or SCALE ON/OFF) until the LCD displays “DISPLAY CORNER CTS”.
3. Press and release the ENTER button (LBS/KGS). The LCD should display “ ∧ ∨ SELECT CORNER”.

   The two buttons listed below function as POSITION buttons to select the four corners of the bed’s litter. Whenever the LCD displays “∧ ∨ SELECT CORNER”, press one of these buttons to cycle through the corners and to select the load cell assembly at the desired corner.

   A. ZERO = cycle up through the four corners

   B. SCALE ON/OFF = cycle down through the four corners

4. Press and release the position button that corresponds with the load cell to be checked. The LCD should display “X/X=NNN.N”. ”X/X” represents the initials of the selected corner , i.e. H/R will be displayed for the patient’s head end, right side. ”NNN.N” represents the resistance of the load cell.
5. Repeat step four for each corner. Head end weight readings will normally be lower than foot end weights. Weight readings should be constant. A drifting 000.0 or 999.9 weight, or a reading that does not change when weight is applied to that corner of the bed indicates a problem with the selected load cell assembly or load cell cable.

Verifying Scale Accuracy:

1. Zero the empty bed. Place a known weight on the center of the bed; the heavier the better and no less than 100 pounds. The displayed weight should be ± 1% of the actual weight.
2. If the displayed weight is not accurate, remove the weight from the bed and proceed to the Scale Calibration section.

Scale Calibration:

NOTE

It requires **two people** to enable the calibration mode for the scale system.
Raise the siderails when calibrating the scale to avoid getting inaccurate scale readings due to possible interference between the siderails and the casters.

Calibrate the scale system with a known 50 pound weight. If exactly 50 pounds is not available, the factory default for calibration will have to be changed as described in step 6.

1. To enter the calibration mode, unplug the bed’s power cord from the wall socket.
2. Press and **hold down** the LBS/KGS button.
3. While still holding the LBS/KGS button, plug the bed’s power cord into the wall socket.
4. After two seconds, release the LBS/KGS button. The LCD should read “ANGLE CALIBRATE”. The calibration mode is now active.
5. Press and hold the ENTER button (LBS/KGS). Zero the bed, following the displayed instructions. When the bed is zeroed, the LCD should display “REF X100=<0>5000”. This is the factory default for 50 pounds. If 50 pounds will be used to calibrate the scale, proceed to step 7.

SCALE SYSTEM DIAGNOSTICS AND CALIBRATION (CONTINUED)

Scale Calibration (Continued):

6. If exactly 50 pounds is not available, change the display to match the weight you are using. Pressing the CHANGE EQUIP button will move the cursor position to the right. Pressing the up arrow (ZERO) button will increase the numbers. Pressing the down arrow (SCALE ON/OFF) button will decrease the numbers. Scroll through the numbers until they match the weight you will use for calibration.
7. Place the 50 pound calibrated weight in the center of the bed. Press and release the ENTER button and the LCD will display “PRESS REV. TREND”. Press and hold the button with the Reverse Trendelenburg symbol (feet down/head up) until the bed stops. Release the button and the LCD will display “DO NOT TOUCH BED”. Press and hold the Reverse Trendelenburg button again until the bed stops. Release the button and the LCD will display “DO NOT TOUCH BED”.
8. The LCD will display “PRESS TREND.” Press and hold the button with the Trendelenburg symbol (feet up/head down) until the bed stops. Release the button and the LCD will display “DO NOT TOUCH BED”. Press and hold the Trend button again until the bed stops. Release the button and the LCD will display “DO NOT TOUCH BED”.
9. Repeat steps 5 − 8 with 200 pounds.
10. The LCD will display the weight. This indicates the calibration procedure is complete.
11. Level the bed at a full up or full down position. Remove the weight and zero the bed.
12. Verify scale accuracy and functionality before returning the bed to service.

LOAD CELL REPLACEMENT

Required Tools:

9/16” Socket Wrench
9/16” Open End Wrench
Saw Horse (or Equivalent)
Wire Cutters

Replacement Procedure:

1. Raise the Fowler or knee section, depending which end of the litter needs service.
2. Unplug the load cell connector from the load cell cable.
3. Using wire cutters, remove the wire ties holding the cable to the frame.
4. Using a 9/16” socket and a 9/16” open end wrench, remove the two bolts holding the load cell to the litter cross tube and remove the load cell.
5. Using a saw horse, support the litter at the end where the load cell was removed. Reverse the above procedure to install the new load cell.

NOTE
Scale calibration procedure must be performed after the load cell is replaced (see page 52).

HEAD END MOTOR REMOVAL AND REPLACEMENT

Required Tools:

T27 Torx
7/16” Socket Wrench
3/8” Socket Wrench
Wire Cutters

Procedure:

1. Run the litter to the full up position and remove the mattress from the bed.
2. Fold the foot section back toward the head end of the bed. Electrically run the knee section to full up. If the knee section will not move electrically, pull the foot section toward the head end of the bed while pulling the CPR release handle (located at the head end of the bed). The knee section will raise.
3. Using a T27 torx, remove the four screws holding the cover to the actuator box and remove the cover.
4. Remove the two CPR release cables from the CPR release bracket. Using a 3/8” socket wrench underneath the actuator box, remove the two bolts holding the release bracket to the actuator box and remove the bracket from the actuator box.
5. Disconnect all the electrical connections going to the head motor and move aside any wiring that could interfere with the removal of the motor.
6. Using a 3/8” socket wrench underneath the actuator box, remove the four bolts holding the motor mounting bracket to the actuator box. Lift up and out on the motor to remove it.
7. Remove the motor mounting bracket from the old motor and install it on the replacement motor.
8. Reverse steps 3 through 6 to install the replacement motor.
9. Verify the bed is working properly before returning it to service.

KNEE MOTOR REMOVAL AND REPLACEMENT

Required Tools:

T27 Torx 7/16” Socket Wrench 3/8” Socket Wrench
Wire Cutters

Procedure:

1. Run the litter to the full up position and remove the mattress from the bed.
2. Fold the foot section back toward the head end of the bed. Electrically run the knee section to full up. If the knee section will not move electrically, pull the foot section toward the head end of the bed while pulling the CPR release handle (located at the head end of the bed). The knee section will raise.
3. Using a 7/16’ socket wrench, remove the mounting bolt on the litter for the knee dampening cylinder. This leaves the knee dampener mounted only to the seat panel.
4. Using a T27 torx, remove the four screws holding the cover to the actuator box and remove the cover.
5. Remove the two CPR release cables from the CPR release bracket. Using a 3/8” socket wrench underneath the actuator box, remove the two bolts holding the release bracket to the actuator box and remove the bracket from the actuator box.
6. Disconnect all the electrical connections going to the knee motor and move aside any wiring that could interfere with the removal of the motor.
7. Pull the foot panel toward the head end of the bed. This causes the knee motor linkage to roll past center and allows the motor to be removed without supporting the knee section.
8. Using a 3/8” socket wrench underneath the actuator box, remove the four bolts holding the motor mounting bracket to the actuator box. Lift up and out on the motor to remove it.
9. Remove the motor mounting bracket from the old motor and install it on the replacement motor.
10. Install the replacement motor.
11. Reverse step 3 − 5 to reinstall the knee dampener, CPR bracket and actuator box cover.
12. Pull the foot panel toward the foot end of the bed. This causes the knee motor linkage to roll back past center. If this step is not done, damage to the motor or linkage will occur.
13. Verify the bed is working properly before returning it to service.

POWER SUPPLY REMOVAL AND REPLACEMENT

Required Tools:

T27 Torx Needle−Nose Pliers

Procedure:

1. Run the litter to the full up position and remove the mattress from the bed.
2. Fold the foot section back toward the head end of the bed. Electrically run the knee section to full up. If the knee section will not move electrically, pull the foot section toward the head end of the bed while pulling the CPR release handle (located at the head end of the bed). The knee section will raise.
3. Using a T27 torx, remove the four screws holding the cover to the actuator box and remove the cover.
4. Properly ground yourself (see page 20).
5. Unplug all electrical connections from the power supply.
6. Using needle−nose pliers, squeeze the four stand−offs supporting the power supply and pull up gently on the power supply to remove it.
7. Reverse steps 2 through 5 to install the new power supply.
8. Verify the bed is working properly before returning it to service.

CPU BOARD REMOVAL AND REPLACEMENT

Required Tools:

T27 Torx Needle−Nose Pliers

Replacement Procedure:

1. Run the litter to the full up position and remove the mattress from the bed.
2. Fold the foot section back toward the head end of the bed. Electrically run the knee section to full up. If the knee section will not move electrically, pull the foot section toward the head end of the bed while pulling the CPR release handle (located at the head end of the bed). The knee section will raise.
3. Using a T27 torx, remove the four screws holding the cover to the actuator box and remove the cover.
4. Properly ground yourself (see page 20).
5. Unplug all electrical connections from the CPU board.
6. Press the six stand−offs away from the board while gently lifting the board up and out.
7. Install the replacement CPU board.

NOTE
After the replacement CPU board is installed, a “burn−in” procedure must be performed for the Fowler and lift motor potentiometers (see page 45 and page 58).
If the bed is equipped with a scale system, the scale calibration procedure must also be performed after the replacement CPU board is installed (see page 52).

FOWLER POTENTIOMETER REPLACEMENT

Required Tools:

T27 Torx
Wire Cutters
1/2” Open End Wrench
7/64” Allen Wrench

Replacement Procedure:

1. Manually crank the knee section up until it stops.
2. Using a T27 Torx, remove the four screws holding the litter access cover to the litter and remove the cover.
3. Using a 7/64” Allen wrench, loosen the screw holding the linkage to the pot. shaft and remove the linkage from the shaft.
4. Using a 1/2” open end wrench, remove the nut holding the potentiometer to the frame.
5. Using wire cutters, remove the cable ties from the cable. Unplug the cable from the CPU and remove the pot.
6. Reverse the above procedure to install the replacement potentiometer.
7. The new potentiometer must be calibrated after it has been installed.
8. The Fowler pot. should be set at 150 ohms (± 10 ohms) in the full down position. This reading must be taken from pins 3 and 4 on the connector with the pot. unplugged from the board. After the correct ohm reading is achieved, tighten the screw on the linkage.
9. Unplug the bed power cord from the wall socket.
10. Press and hold the “Knee Lockout” and “Bed Motion Lock” buttons on the foot board.
11. Plug the power cord into the wall socket. Release the two buttons and the “Knee Lockout” LED should be flashing. This indicates the bed is in the correct calibration mode.
12. Using the foot board controls, run the Fowler up to 90°. Press and hold the button on the foot board to lock out the siderail controls for the back until the padlock LED flashes. Release the button.
13. Using the foot board controls, run the Fowler down to 0°. Press and hold the button on the foot board to lock out the siderail controls for the knee until the padlock LED flashes. Release the button and unplug the bed power cord to complete the “burn in” mode.
14. Plug the bed power cord into the wall socket and verify the back limits are set properly before returning the bed to service.

FOWLER POTENTIOMETER “BURN−IN” PROCEDURE

NOTE

It requires **two people** to enable the diagnostics mode for the bed.

1. Unplug the bed power cord from the wall socket.
2. On the foot board control panel, hold down the bed motion lock button and the button to lock out the side-rail controls for the knee. While still holding the buttons, plug the bed power cord into the wall socket. Release the foot board buttons. The siderail control lights LED should be flashing to indicate the bed is in diagnostics mode.
3. Using the foot board controls, run the Fowler up to 90°. Press and hold the button on the foot board to lock out the siderail controls for the back until the padlock LED flashes. Release the button.
4. Using the foot board controls, run the Fowler down to 0°. Press and hold the button on the foot board to lock out the siderail controls for the knee until the padlock LED flashes. Release the button..

OPTIONAL SMART TV INTERFACE “BURN−IN” PROCEDURE

This procedure is used for selecting the style of TV interface needed for your bed. If traditional TV is desired, no calibration is required. If optional Smart TV is available on the bed, select one of the TV manufacturers listed in the table below.

SET−UP

- Ensure the communication cable is connected between the bed and the Db37 wall port or the pillow speaker port of the nurse call system. If available, a bed communication tester can be used instead of the hospital wiring.

PROCEDURE

1. Place the bed in the lift potentiometer burn−in mode (see page 45).
2. Notice the Nurse Call LED (yellow) is flashing. Notice the Nurse Answer LED (green) is flashing on/off slowly.
3. Press and release the TV ON/OFF switch on the bed’s siderail once. Notice the Nurse Call LED flashes once. This is the first selection of TV manufacturers for the Smart TV mode. Notice the Nurse Answer LED (green) is flashing on/off slowly. The Nurse Answer LED will only light when the Nurse Call LED (yellow) is flashing.
4. Press and release the TV ON/OFF switch on the bed’s siderail to scroll to other TV manufacturers. Notice the number of times the Nurse Call LED flashes matches the number listed in the table below and represents the TV manufacturer selected.
5. When the desired TV manufacturer has been selected, unplug the bed power cord from the wall socket and plug it back in to complete the Smart TV burn−in procedure.

NOTE

If the bed is connected to a television during the burn−in procedure, the television will turn on when the correct setting is selected.

TV MANUFACTURER SELECTION FOR SMART TV BURN−IN PROCEDURE		
Press and release TV ON/OFF switch:	**Nurse Call LED (Yellow)**	**TV Manufacturer**
One time	One flash	RCA 1
Two times	Two flashes	RCA 2
Three times	Three flashes	Zenith 1
Four times	Four flashes	Zenith 2
Five times	Five flashes	Phillips/Magnavox
Six times	Six flashes	Magnavox (models 9120, 9220, 9320)
Seven times	Seven flashes	Traditional Plus
Eight times	Eight flashes	Traditional TV
Nine times	Nine flashes	Auto Detect: Smart TV
Ten times	Ten flashes	Auto Detect w/ Digital Volume Smart TV

EPIC+ OPTION AC CROSSOVER BOARD REPLACEMENT

Required Tools:

T27 Torx	1/2” Box End Wrench	#2 Phillips Screwdriver
Wire Cutters	Small Flat Blade Screwdriver	Needle Nose Pliers
5/16” Nut Driver		

Replacement Procedure:

1. Raise the litter and the head end to the full up position.
2. Remove the head board from the bed.
3. Unplug the power cord from the wall socket and push the battery power on/off switch to the “OFF” position.
4. Using a 5/16” nut driver, remove the screw (A) holding the power cord clamp to the bumper weldment and remove the clamp from the bumper.

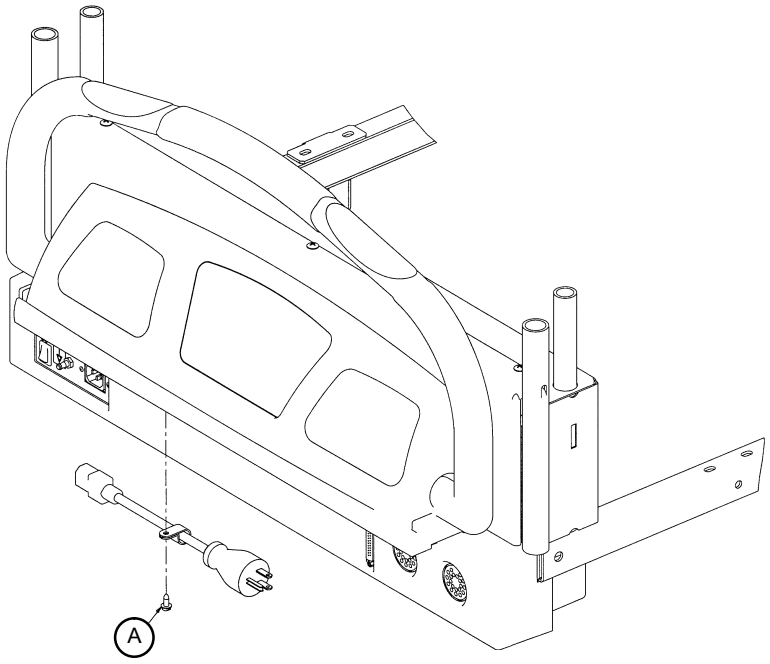

FIGURE 1

EPIC+ OPTION AC CROSSOVER BOARD REPLACEMENT (CONTINUED)

5. Using a T27 Torx, remove the four bolts (C) at the head end of the bed holding the control bar mounting bracket to the head end (see Figure 2).
6. Using a #2 Phillips screwdriver, remove the three screws (D) holding the control bar cover to the head end of the bed (see Figure 3).

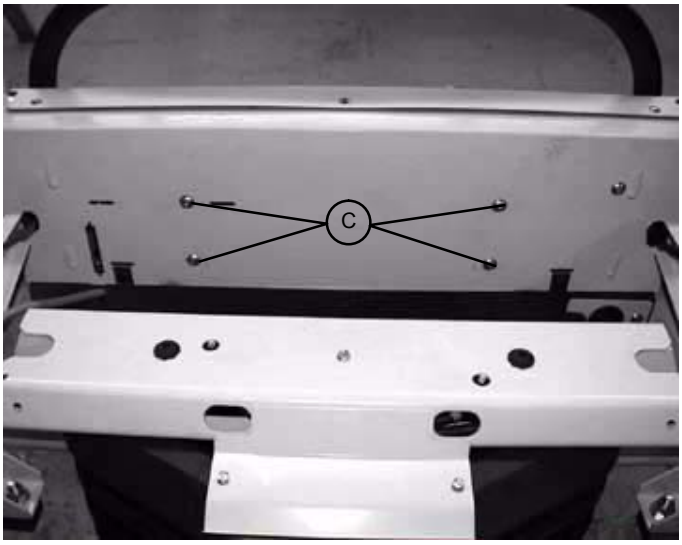

FIGURE 2

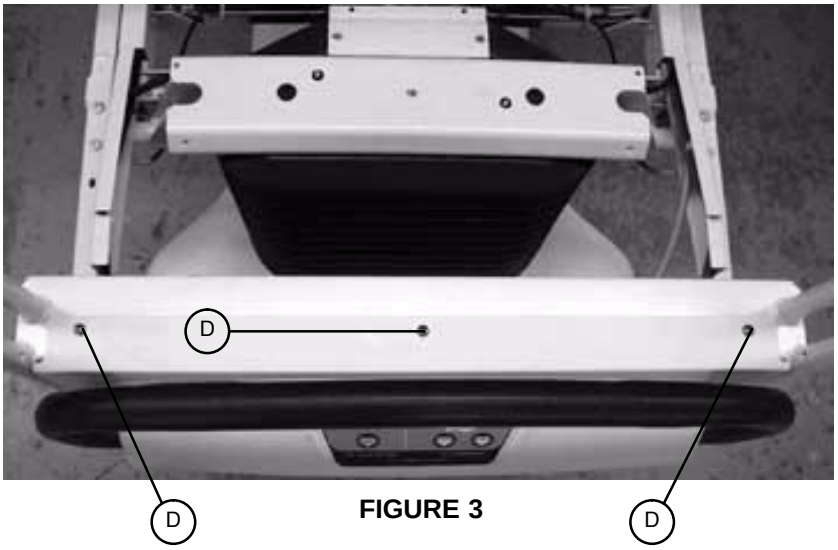

FIGURE 3

7. Using a T−27 Torx, remove the 2 bolts holding the AC crossover board cover to the head end frame and remove the cover.
8. Disconnect all wires from the AC crossover board.
9. Using needle nose pliers, release the four mounting stand−offs from the board and remove the board.
10. Reverse steps 9 − 12 to install the new board.
11. Reverse steps 1 − 8 of the control bar potentiometer replacement procedure on 61 to reassemble the bed.

EPIC+ OPTION DISPLAY/CPU BOARD REPLACEMENT

Required Tools:

T27 Torx	1/2” Box End Wrench	#2 Phillips Screwdriver
Wire Cutters	Small Flat Blade Screwdriver	Needle Nose Pliers
5/16” Nut Driver		

Replacement Procedure:

1. Follow steps 1 − 8 of the AC Crossover Board replacement procedure on page 60 & 61.
2. Disconnect all wires from the display/CPU board.
3. Using a #2 Phillips screwdriver, remove the six screws holding the display/CPU board to the control bar cover and remove the board.
4. Reverse steps 2 & 3 to install the new board.
5. Reverse steps 1 − 8 of the AC Crossover Board replacement procedure on page 60 & 61 to reassemble the bed.

HEAD AND FOOT SIDERAIL COVER REMOVAL

Required Tools:

#2 Phillips Screwdriver

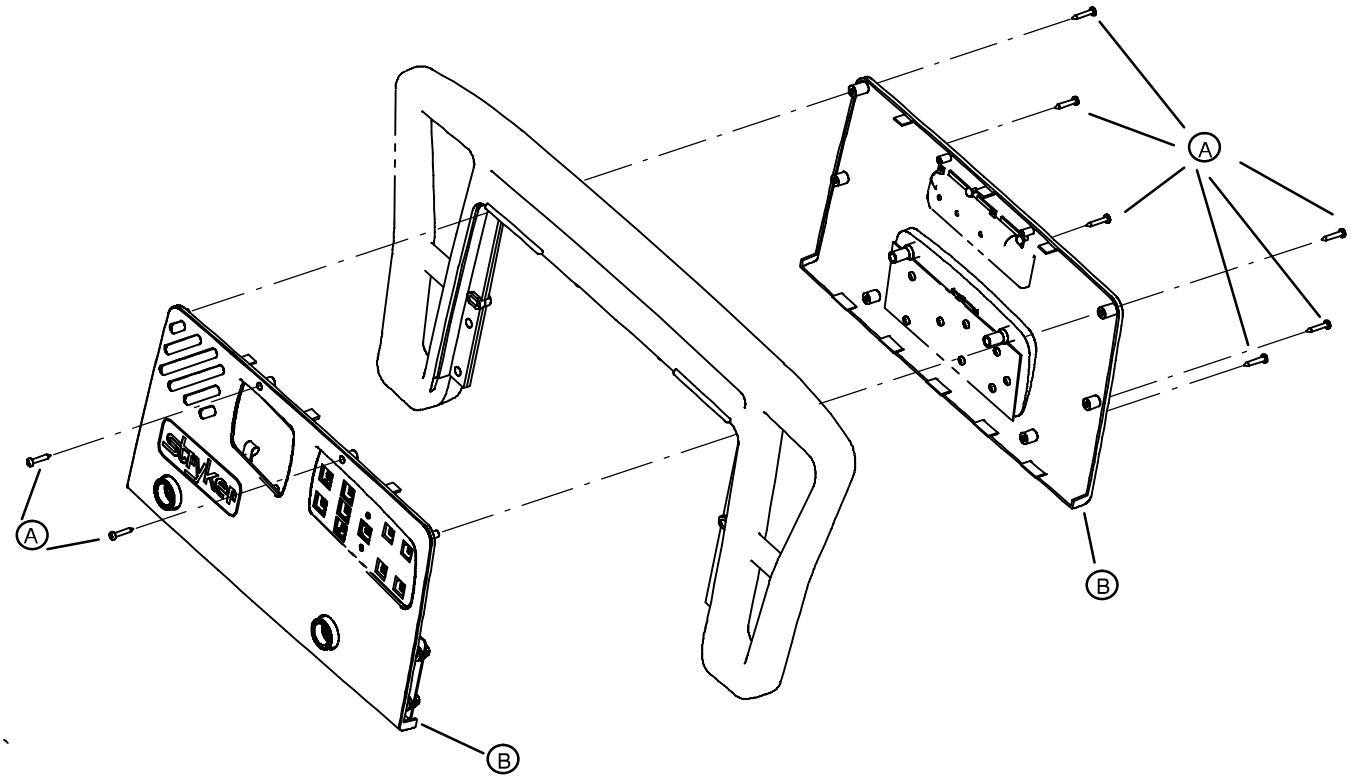

Removal Procedure:

1. Unplug the power cord from the wall receptacle.
2. Using a #2 Phillips screwdriver, remove the 8 phillips screws (A) holding the covers (B) to the siderail.

⚠ **CAUTION**

There are two cables connecting the outside cover to the head end siderail. Be careful not to pull on them when removing the cover.

3. Remove the cables from the siderail. Make note of the proper location for the cables.
4. Reverse the above steps to reattach the cover.

⚠ **CAUTION**

Do not snag the cables when installing the siderail cover.

NOTE

Follow the same procedure for siderail cover removal for the foot end rails.

HEAD AND FOOT MOLDED SIDERAIL REPLACEMENT

Required Tools:

#2 Phillips Screwdriver 3/8” Nut Driver

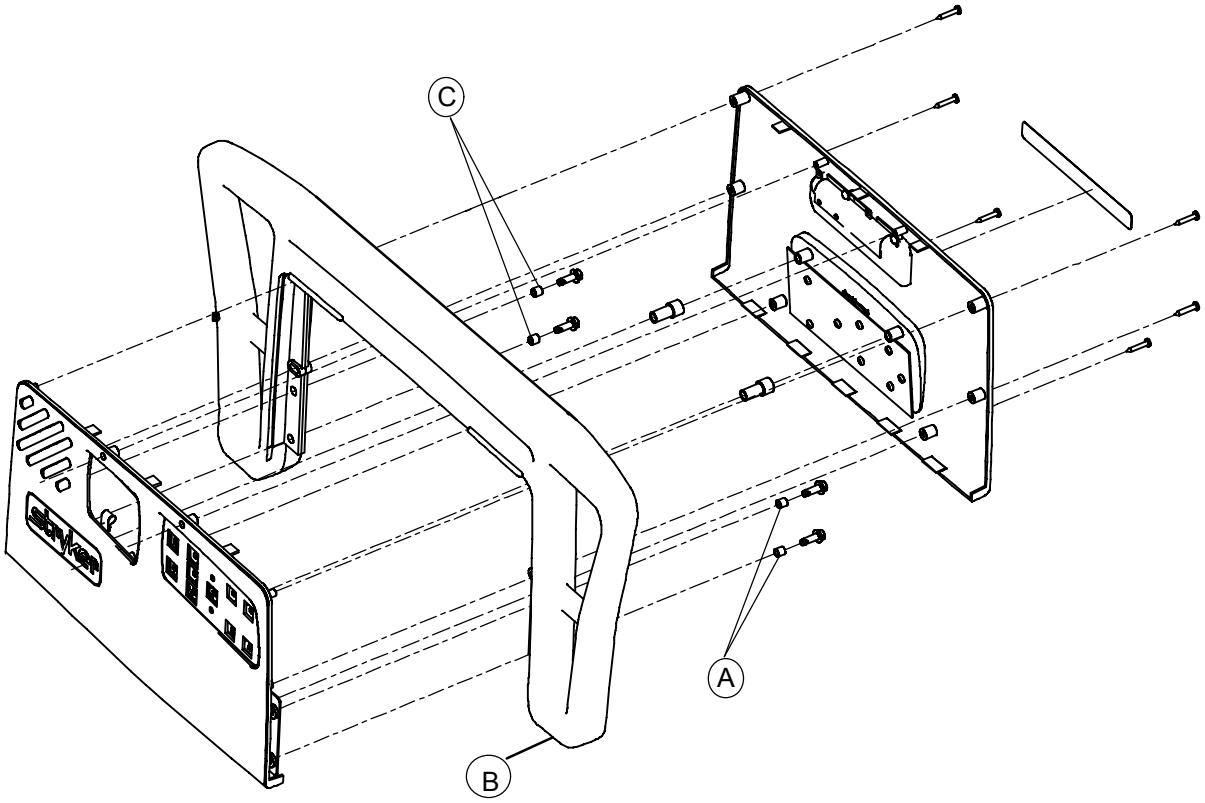

Procedure:

1. Unplug the bed power cord from the wall socket.
2. Remove the siderail cover (see page 63).
3. Using a 3/8” nut driver, remove the four screws (A) holding the molded rail (B) to the siderail support assembly.

NOTE

Note the location of the spacers (C) for re−assembly purposes.

4. Pull up on the molded rail (B) to remove it from the siderail assembly.
5. Reverse the above steps to install the new molded rail.

HEAD END SIDERAIL CABLE REPLACEMENT

Required Tools:

#2 Phillips Screwdriver

Side Cutters

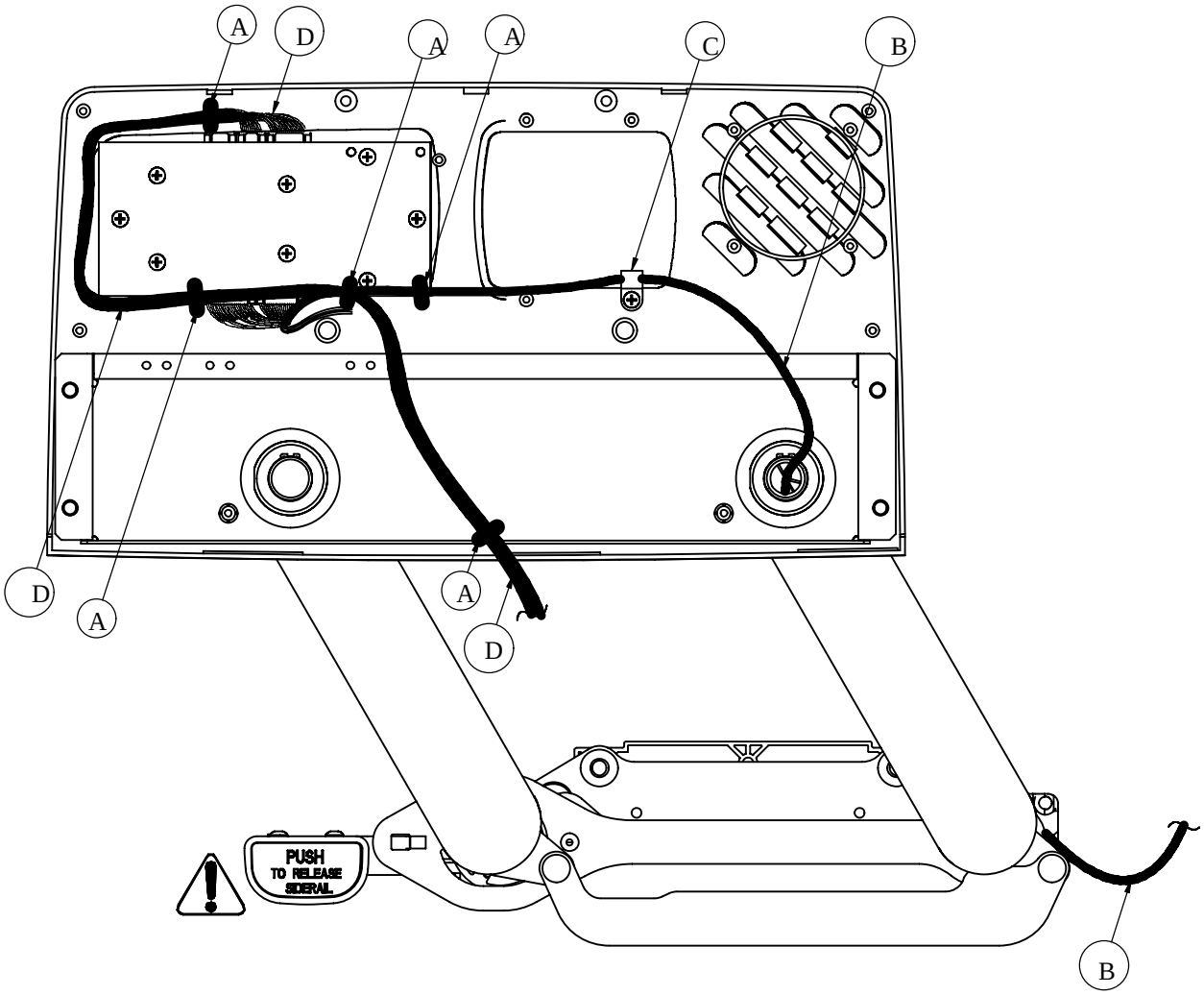

Procedure:

1. Run the head section fully up.
2. Unplug the bed power cord from the wall socket.
3. Using a #2 Phillips screwdriver, remove the eight screws holding the siderail cover and remove the cover.
4. Put the siderail in the down position.
5. Remove the cover to expose the siderail cables.

HEAD END SIDERAIL CABLE REPLACEMENT (CONTINUED)

6. Using side cutters, clip the cable ties (A) holding the cables together.
7. Using a #2 Phillips screwdriver, remove the cable clamp (C) from the siderail.
8. Disconnect cable (B) from the circuit board and cable (D) from the speaker.

NOTE

The speaker and nurse call are optional equipment and may not be in the siderail as shown.

9. Pull the cables through the siderail (toward the center of the bed).
10. Unplug the cable assembly underneath the head section.
11. Reverse the above steps to install the new cable.

⚠ **CAUTION**

Be sure to position the cables on both sides of the pivot arm, as shown in the illustration on page 65, before reattaching the pivot arm cover. If not done properly, the cover will not fit tightly and damage could occur to the cables.

FOOT BOARD HINGE REMOVAL

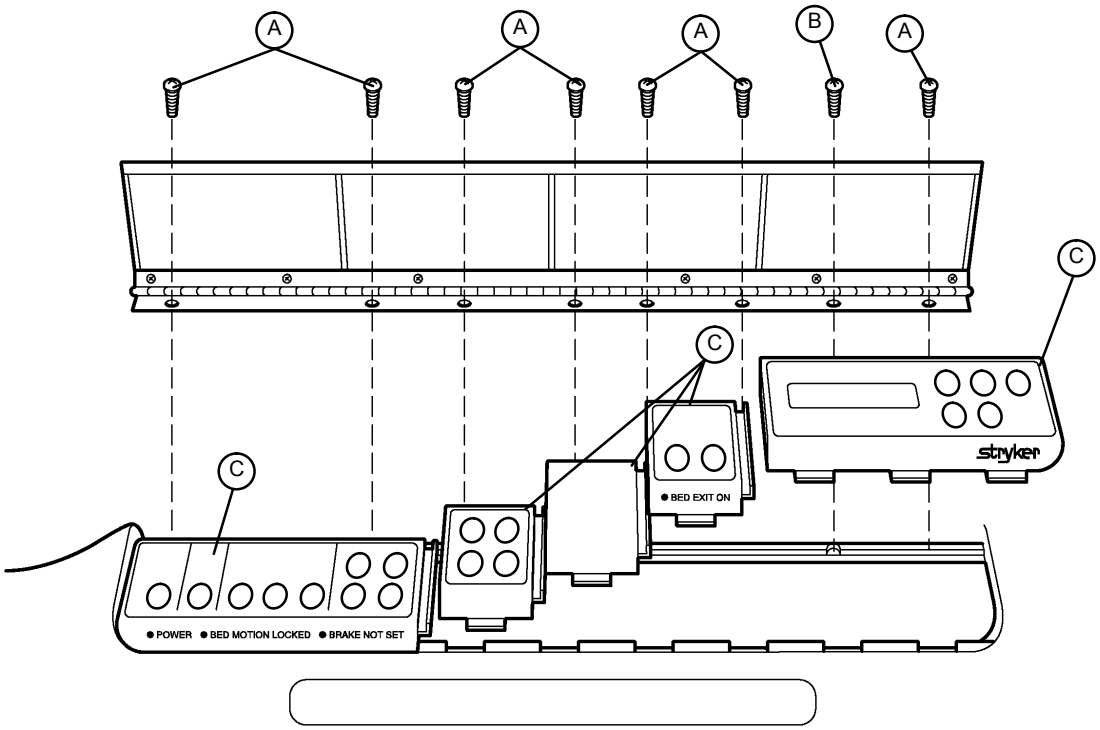

Required Tools:

#2 Phillips Screwdriver

Procedure:

1. Using a #2 Phillips screwdriver, remove the screws (A & B) holding the door and hinge assembly to the foot board.
2. If replacing the hinge only, use a Phillips screwdriver to remove the screws holding the hinge to the door.
3. Reverse the above steps to attach the replacement door and/or hinge.

NOTE

Screw (B) is a machine screw and must be reinstalled in the proper hole.

FOOT BOARD MODULE REPLACEMENT

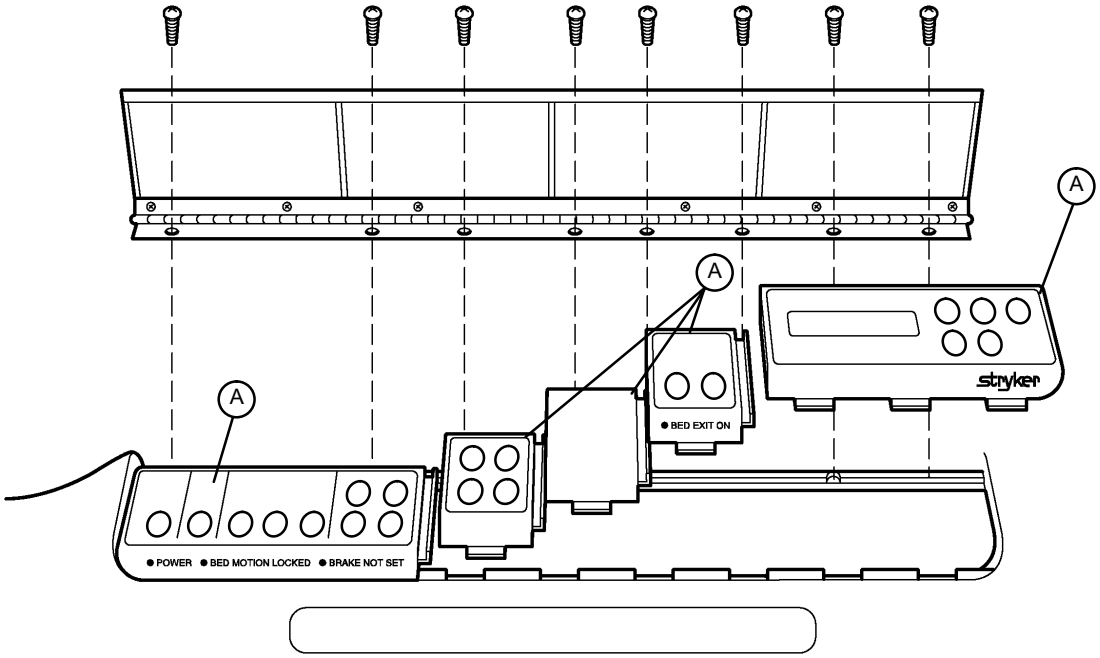

Required Tools:

#2 Phillips Screwdriver

Procedure:

1. Unplug the bed power cord from the wall socket. Remove the foot board hinge (see above).

NOTE

Regardless of which module is being replaced, the farthest module to the right must be removed first.

2. Pull the module out of the foot board and disconnect the cable from the module (A).
3. Reverse the above steps to install the new module.

⚠ **CAUTION**

The modules must be overlapped as shown in the illustration to prevent fluids from entering the board cavity and causing damage.

FOOT BOARD INTERFACE PLUG REPLACEMENT

Required Tools:

#2 Phillips Screwdriver

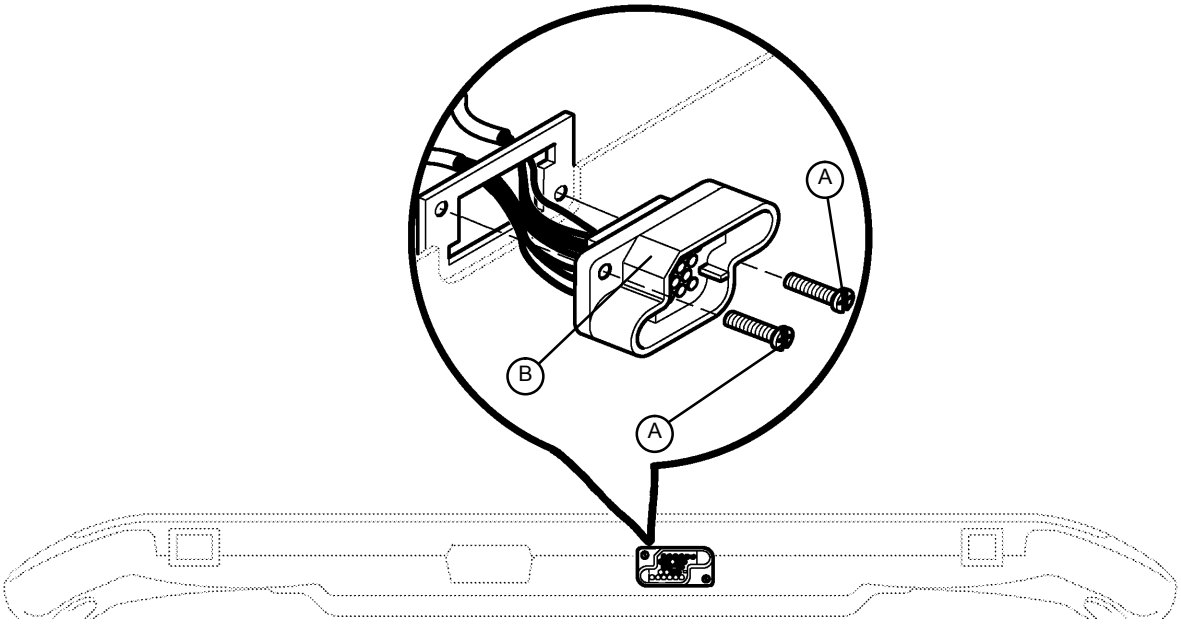

BOTTOM VIEW OF FOOT BOARD

Procedure:

1. Unplug the bed power cord from the wall socket.
2. Remove the foot board from the bed to access the bottom of the board.
3. Properly ground yourself (see page 20 for static discharge precautions).
4. Using a #2 Phillips screwdriver, remove the eight screws holding the foot board door to the foot board and remove the door.
5. Using a #2 Phillips screwdriver, remove the two screws (A) holding the plug to the foot board.
6. Disconnect the cable from the foot board module cable. Note proper placement of the cable so it will be reconnected properly.
7. Reverse the above steps to install the new interface plug.

⚠ **CAUTION**

Be sure to install the plug with the flat edge (B) at the top left, as shown in the illustration, or the foot board interface plug will not mate properly with the bed and damage to the plug or foot board could result.

Base Assembly and Options

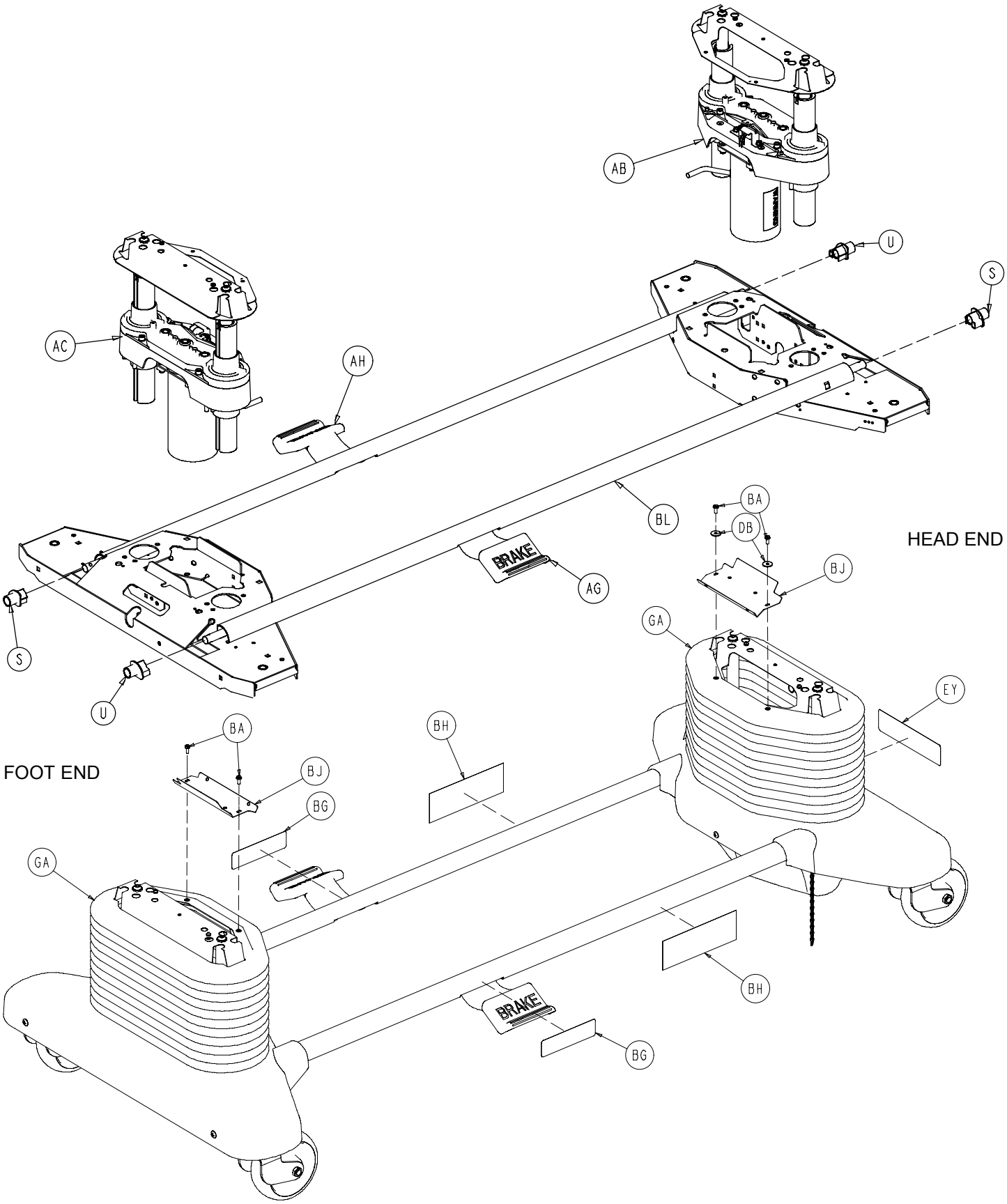

Base Assembly and Options

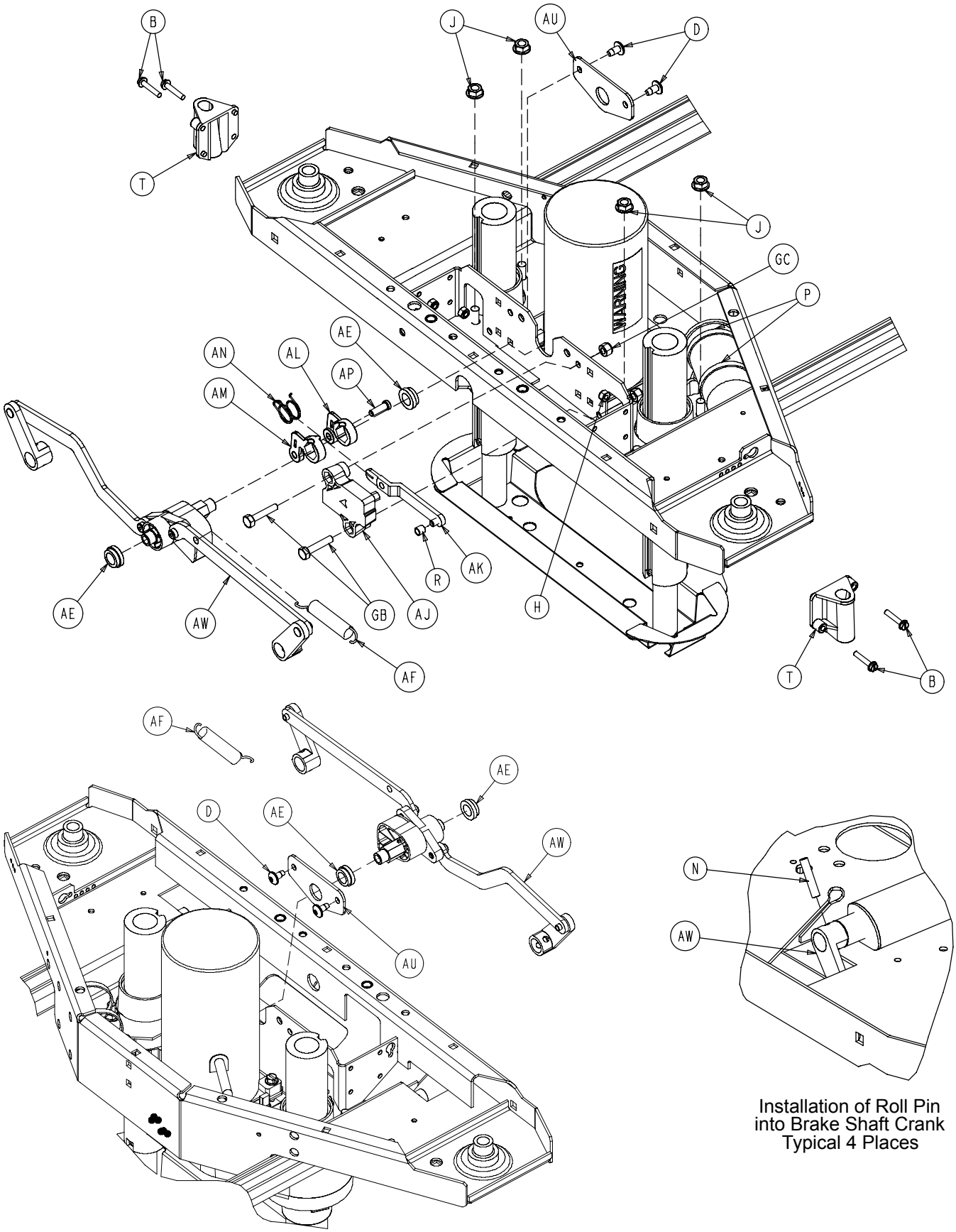

Installation of Roll Pin
into Brake Shaft Crank
Typical 4 Places

Base Assembly and Options

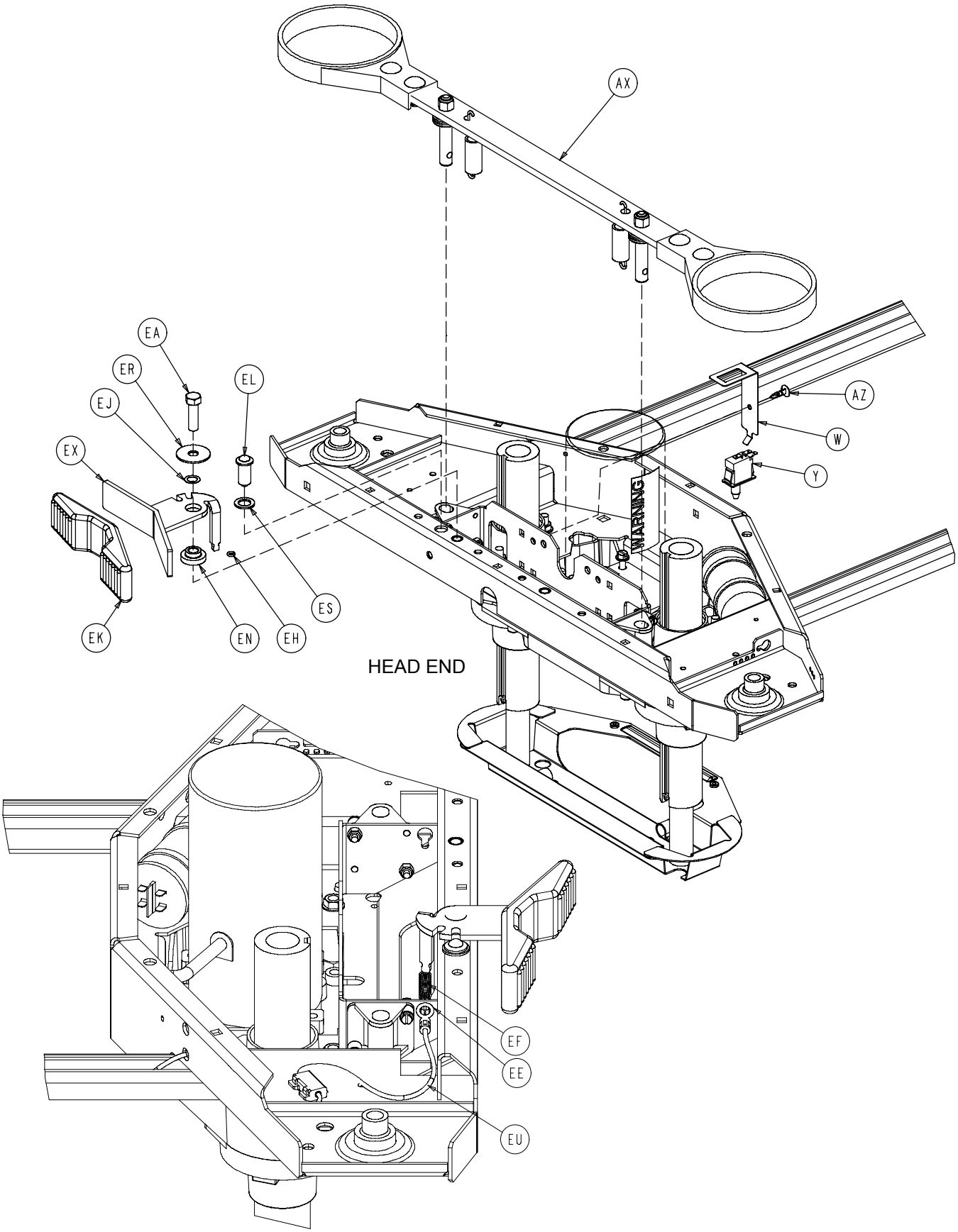

Base Assembly and Options

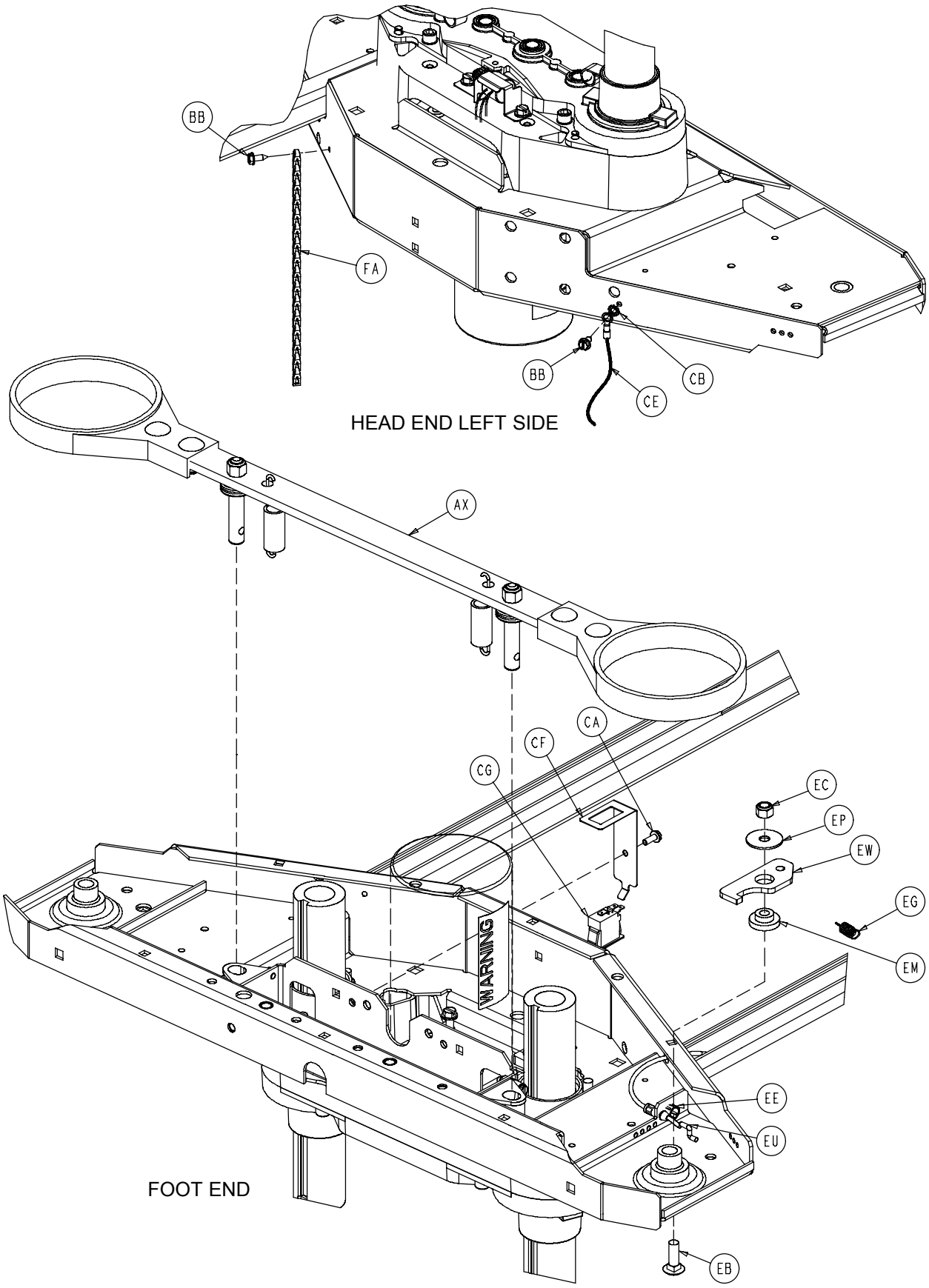

Base Assembly and Options

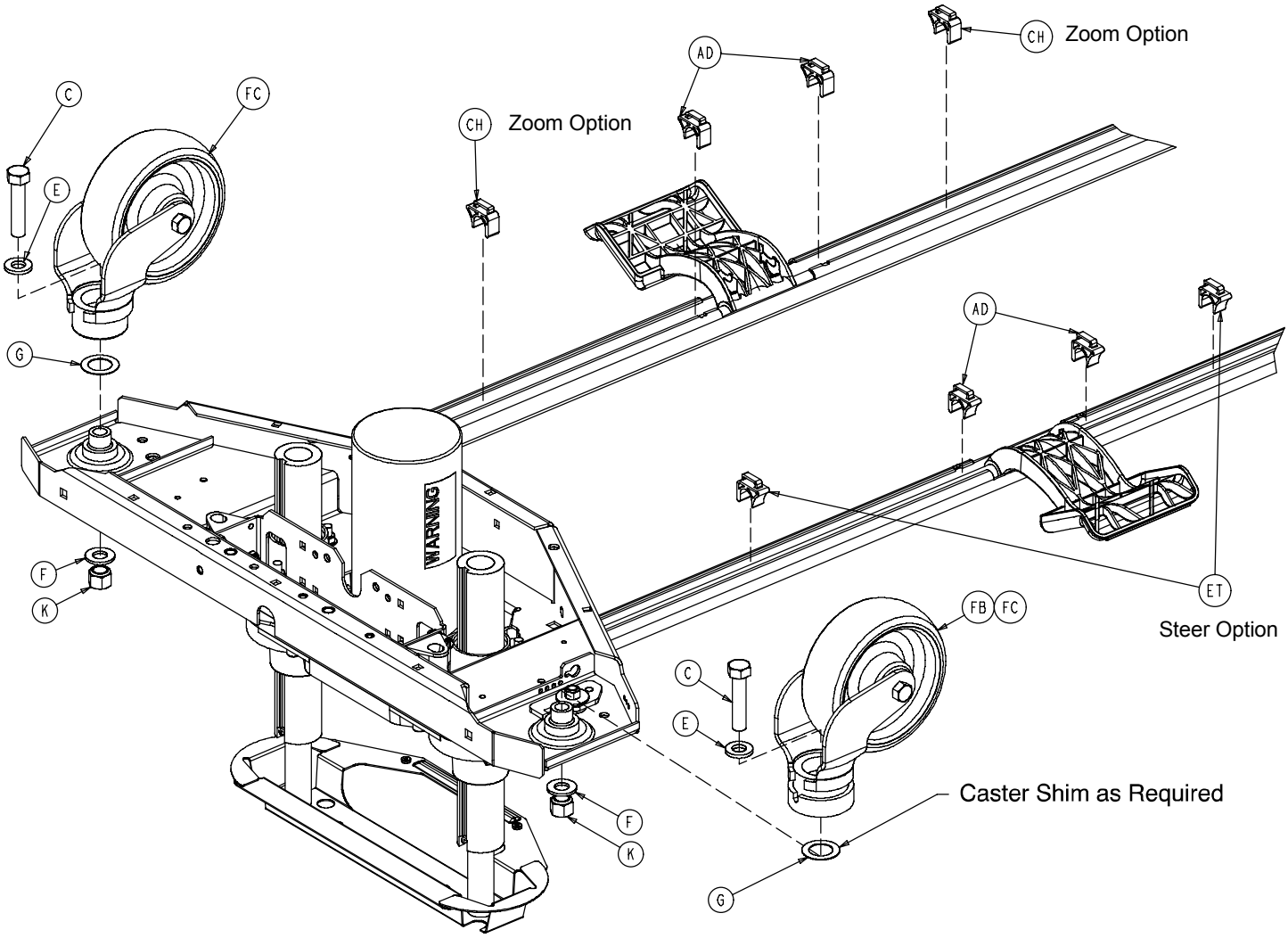

Base Assembly and Options

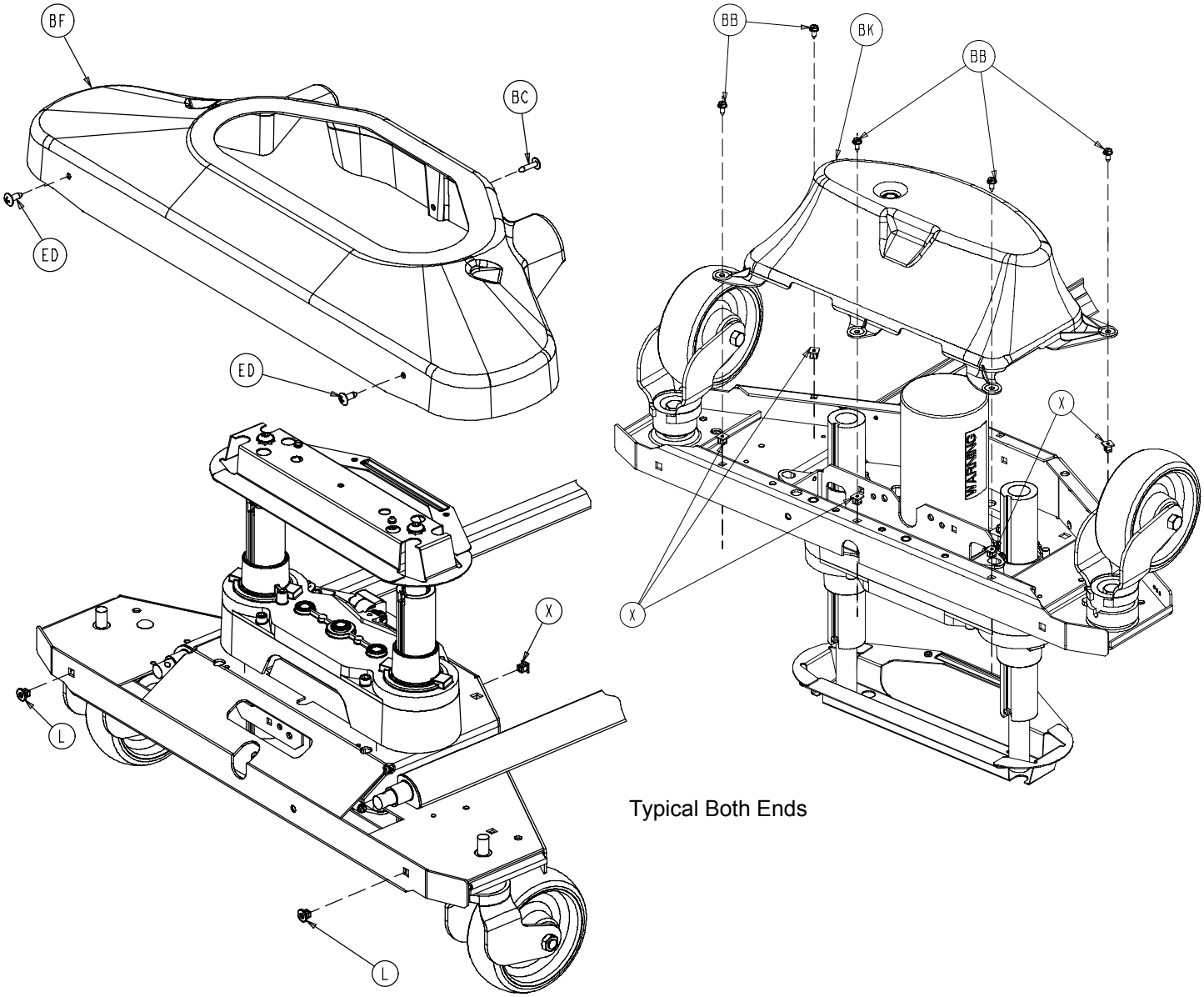

Typical Both Ends

Sensor Coil Cable p/n 3001-200-815 Ground

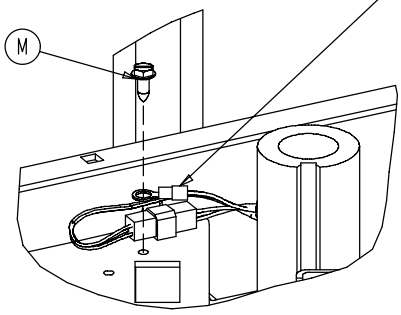

Typical Both Ends

Base Assembly Common Components − Part Number 3002−200−3 (Reference Only)

Item	Part No.	Part Name	Qty.
B	3−122	Hex Washer Hd. Screw	8
D	7−52	Truss Hd. Torx	4
E	11−310	Washer	4
G	11−343	Washer	4
H	16−2	Nylock Nut	8
J	16−98	Hex Flange Nut	8
K	16−49	Nylock Nut	4
L	18−36	Plastic Clip Nut	4
M	3−224	Hex Washer Hd. Screw	2
N	26−14	Roll Pin	4
P	38−151	Cable Tie	4
R	3002−200−316	Brake Track Roller	1
S	3000−200−305	Brake Shaft Bushing, Right	2
T	3000−200−328	Brake Guide Bushing	4
U	3000−200−331	Brake Shaft Bushing, Left	2
W	3000−200−343	Brake Switch Bracket	1
X	3000−300−2	Plastic Clip Nut	10
Y	3000−300−58	Plunger Switch	1
Z	3000−300−113	8” Cable Tie	6
AB	(page 79)	Head End Lift Assembly	1
AC	(page 79)	Foot End Lift Assembly	1
AD	3001−200−306	Brake Pedal Shaft Bearing	4
AE	3001−200−317	Brake Cam Shaft Bushing	4
AF	3001−200−334	Brake Return Extension Spring	2
AG	(page 84)	Brake Shaft Assembly, Left	1
AH	(page 84)	Brake Shaft Assembly, Right	1
AJ	3002−201−301	Brake Ratchet Track	1
AK	3002−200−302	Brake Ratchet Link Assembly	1
AL	3002−200−305	Brake Ratchet Crank, Left	1
AM	3002−200−306	Brake Ratchet Crank, Right	1
AN	3002−200−307	Brake Latch Spring	1
AP	3002−200−318	Brake Ratchet Crank Pin	1
AU	3002−200−314	Brake Mounting Bracket	2
AW	(page 85)	Brake Crank Assembly	2
AX	(page 86)	Brake Bar Assembly	2
AZ	3000−300−115	Stand−Off	1
GA	2025−000−101	Bellows	2
GB	3−74	Hex Hd. Bolt	2
GC	16−28	Nylock Nut	2

Base Assembly and Options

Base Assembly, Epic Bed − Part Number 2030−246−3 (Reference Only)

Item	Part No.	Part Name	Qty.
C	3−204	Hex Hd. Cap Screw	4
X	3000−300−2	Plastic Clip Nut	2
AB	(page 79)	Head End Lift Assembly	1
AC	(page 79)	Foot End Lift Assembly	1
BB	23−25	Hex Washer Hd. Screw	12
BC	23−80	Truss Hd. Screw	2
BF	(page 92)	Uni−Pan Cover	2
BG	3000−200−601	Brake Pedal Label	2
BH	3000−200−602	Stryker Logo Label	2
BK	3001−200−22	Bottom Cover	2
BL	3002−200−102	Base Weldment	1
GA	2030−000−101	Bellows	2

Base Assembly, Zoom ICU Option − Part Number 2040−244−3 (Reference Only)

Item	Part No.	Part Name	Qty.
C	3−204	Hex Hd. Cap Screw	4
AB	(page 79)	Head End Lift Assembly	1
AC	(page 79)	Foot End Lift Assembly	1
BL	3002−200−102	Base Weldment	1
CA	3000−300−115	Stand−Off	1
CB	13−18	External Tooth Lock Washer	1
CE	2025−31−805	Ground Strap	1
CF	3000−200−343	Brake Switch Bracket	1
CG	3000−300−58	Switch Plunger	1
CH	3001−200−306	Brake Pedal Shaft Bearing	2
GA	2030−000−101	Bellows	2

6” Caster Option − 3001−999−138 (Ref.)

Item	Part No.	Part Name	Qty.
FA	3001−200−52	6” Ground Chain	2
FB	(page 88)	6” Steer Caster Assembly	1
FC	(page 87)	6” Caster Assembly	3

8” Caster Option − 3001−999−139 (Ref.)

Item	Part No.	Part Name	Qty.
FA	3001−200−54	8” Ground Chain	2
FB	(page 91)	8” Steer Caster Assembly	1
FC	(page 90)	8” Caster Assembly	3
FD	2025−1−47	Caster Cover, Right	4
FE	2025−1−48	Caster Cover, Left	1

6” Caster Option, Zoom − 2040−999−138 (Ref.)

Item	Part No.	Part Name	Qty.
FA	3001−200−52	6” Ground Chain	2
FC	(page 87)	6” Caster Assembly	3

Base Assembly, Steer Option − Part Number 3001−999−137 (Reference Only)

Item	Part No.	Part Name	Qty.
EA	3−349	Hex Hd. Cap Screw	1
EB	5−16	Carriage Bolt	1
EC	16−11	Nylock Nut	1
ED	23−92	Truss Phillips Hd. Screw	4
EE	30−52	Snap Bushing	2
EF	38−414	Pedal Extension Spring	1
EG	38−416	Lever Extension Spring	1
EH	45−8	O−Ring	1
EJ	52−305	Brass Flat Washer	1
EK	3000−200−336	Steer Pedal	1
EL	3000−200−337	Push Fit Ball Plunger	1
EM	3000−200−339	Steer Lock Lever Bushing	1
EN	3000−200−341	Steer Pedal Bushing	1
EP	3000−200−347	Special Washer	1
ER	3000−200−348	Special Wide Washer	1
ES	3000−200−349	Special Narrow Washer	1
ET	3001−200−306	Brake Pedal Shaft Bearing	2
EU	3001−200−342	Steer Cable Assembly	1
EW	3001−200−370	Steer Lock Lever	1
EX	3001−200−371	Steer Pedal Arm	1
EY	5000−90−13	Steer Label	1

Base Assembly, Epic+ Steer Option − Part Number 2030−999−137 (Reference Only)

Item	Part No.	Part Name	Qty.
EA	3−349	Hex Hd. Cap Screw	1
EB	5−16	Carriage Bolt	1
EC	16−36	Nylock Nut	1
ED	23−92	Truss Phillips Hd. Screw	4
EE	30−52	Snap Bushing	2
EF	38−414	Pedal Extension Spring	1
EG	38−416	Lever Extension Spring	1
EH	45−8	O−Ring	1
EJ	52−305	Brass Flat Washer	1
EL	3000−200−337	Push Fit Ball Plunger	1
EM	3000−200−339	Steer Lock Lever Bushing	1
EN	3000−200−341	Steer Pedal Bushing	1
EP	3000−200−347	Special Washer	1
ER	3000−200−348	Special Wide Washer	1
ES	3000−200−349	Special Narrow Washer	1
ET	3001−200−306	Brake Pedal Shaft Bearing	2
EU	3001−200−342	Steer Cable Assembly	1
EW	3001−200−370	Steer Lock Lever	1
EX	2030−200−1	Steer Pedal Assembly	1
EY	5000−90−13	Steer Label	1

Lift Assembly, Head and Foot End

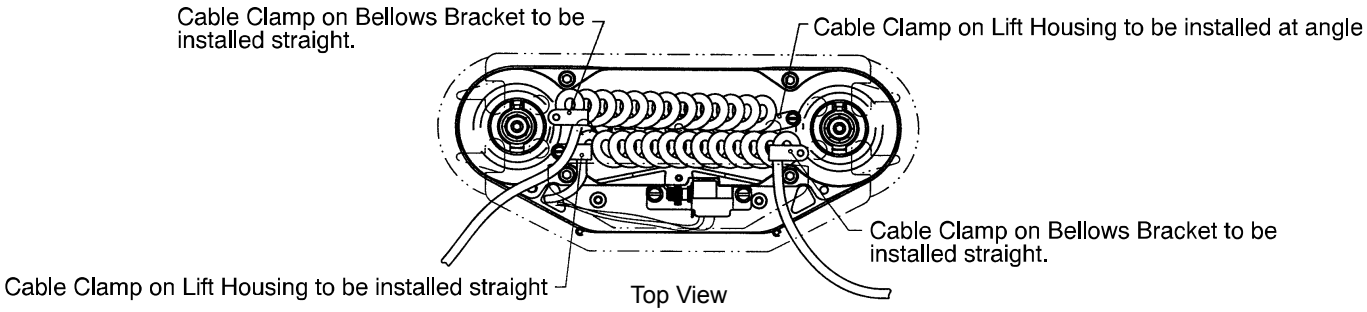

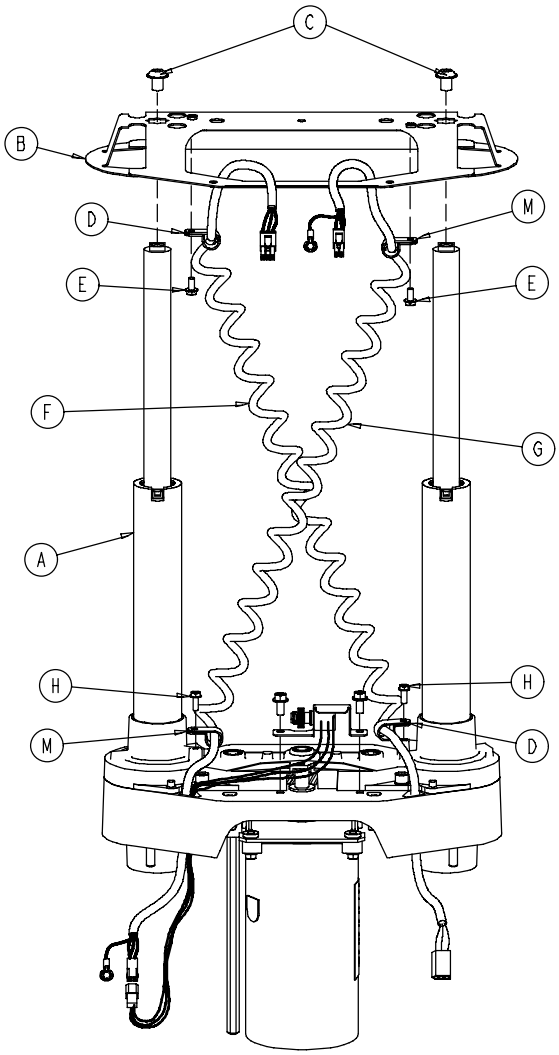

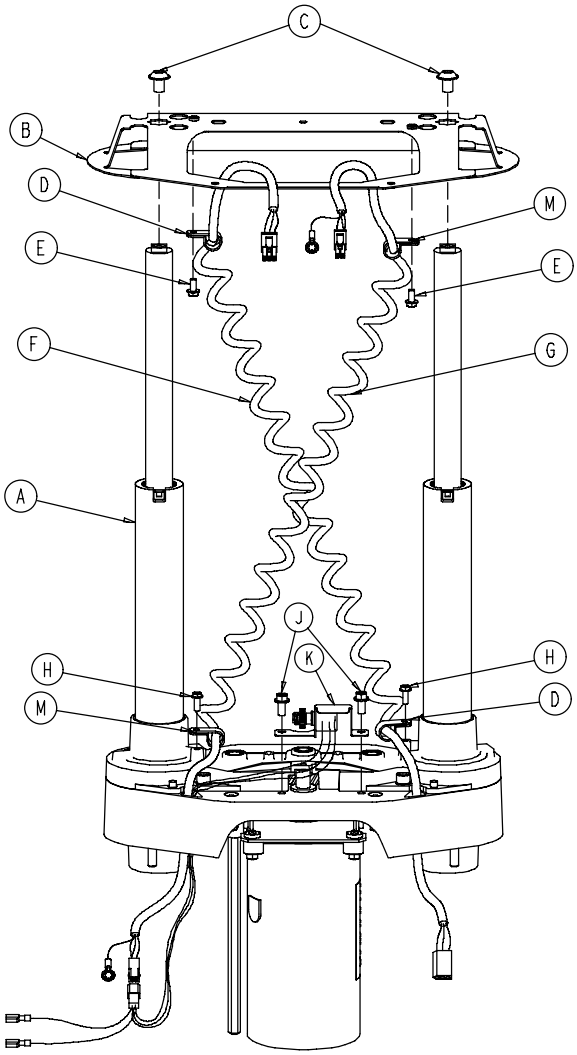

Item	Part No.	Part Name	Qty.	Item	Part No.	Part Name	Qty.
A	(page 80)	Common Lift Assembly	1	G	3001−200−815	Sensor Coil Cord	1
B	3000−200−52	Bellows Bracket	1	H	3−128	Hex Washer Hd. Screw	2
C	4−245	Flanged But. Hd. Screw	2	J	3−121	Hex Washer Hd. Screw	2
D	34−22	Cord Clamp	2	K	3001−200−240	Head End Pot. Ass'y	1
E	3−106	Hex Washer Hd. Screw	2		3001−200−230	Foot End Pot. Ass'y	1
F	3001−200−864	Power Coil Cord	1	M	34−381	Cord Clamp	2

Lift Assembly (Common)

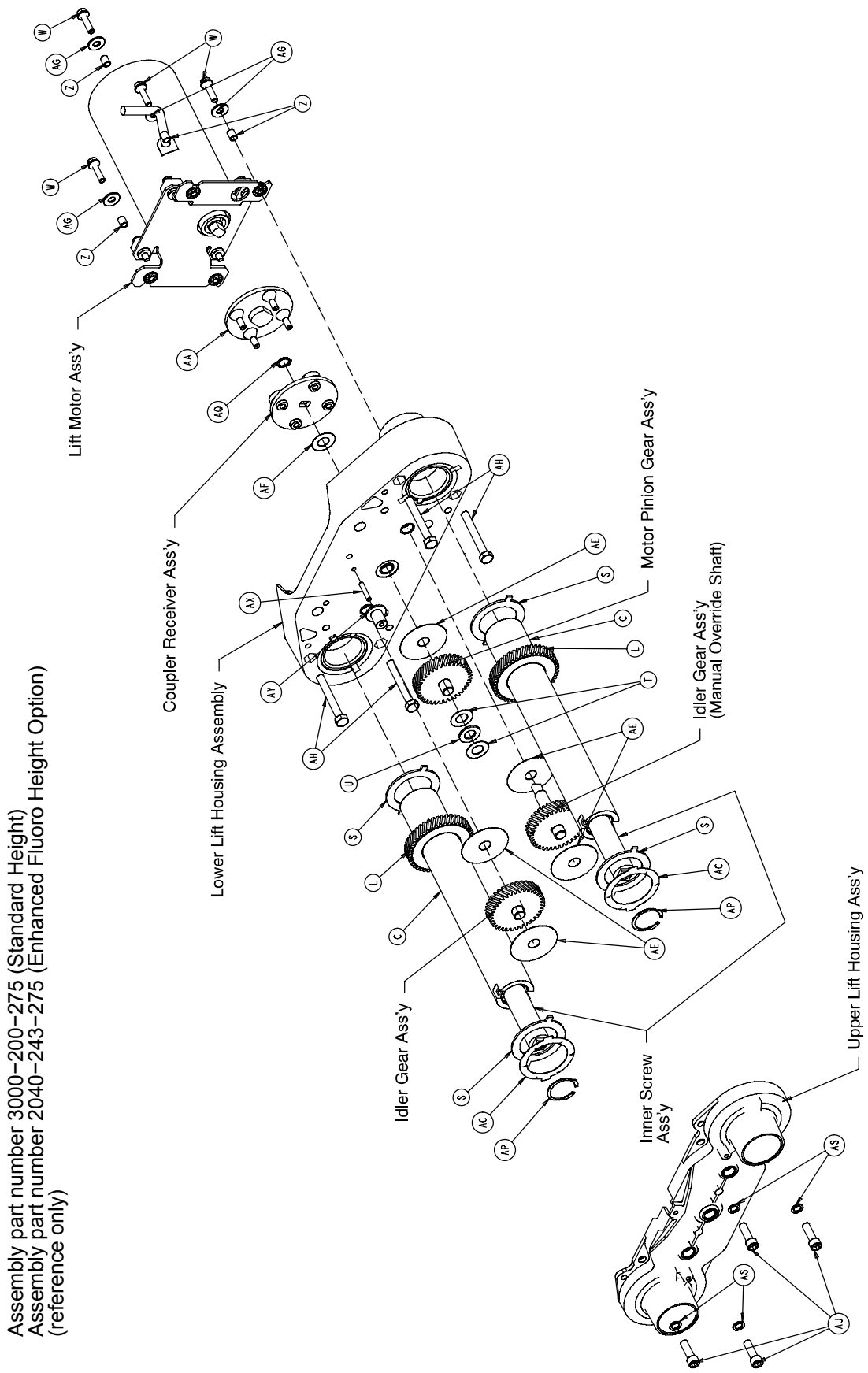

Assembly part number 3000−200−275 (Standard Height)
Assembly part number 2040−243−275 (Enhanced Fluoro Height Option)
(reference only)

Lift Assembly (Common)

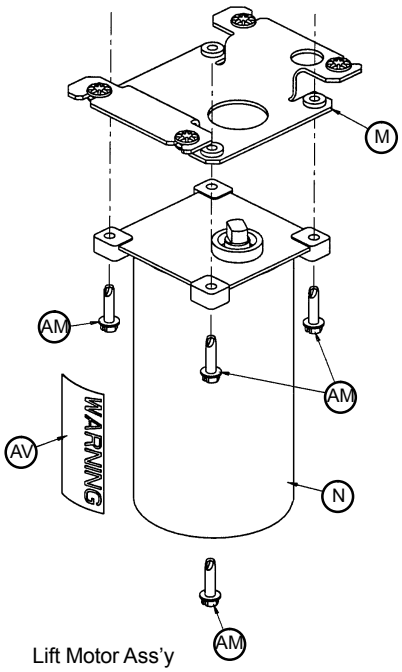

Lift Motor Ass'y

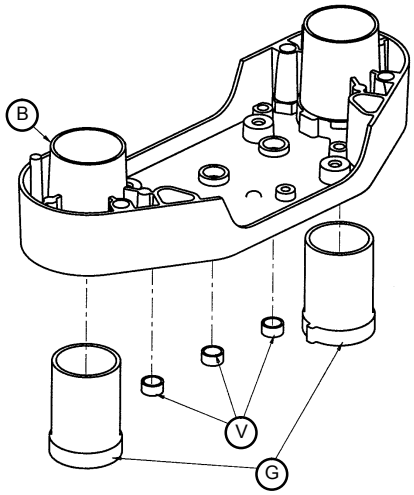

Lower Lift Housing Ass'y

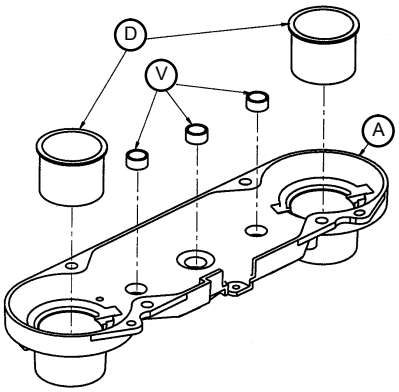

Upper Lift Housing Ass'y

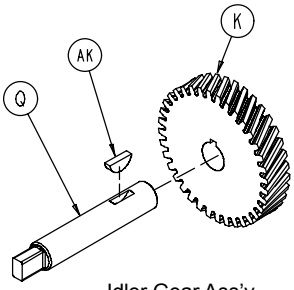

Idler Gear Ass'y
(Manual Override Shaft)

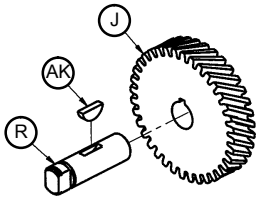

Motor Pinion Gear Ass'y

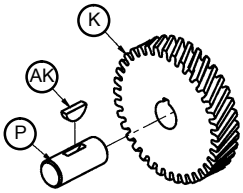

Idler Gear Ass'y

Coupler Receiver Ass'y

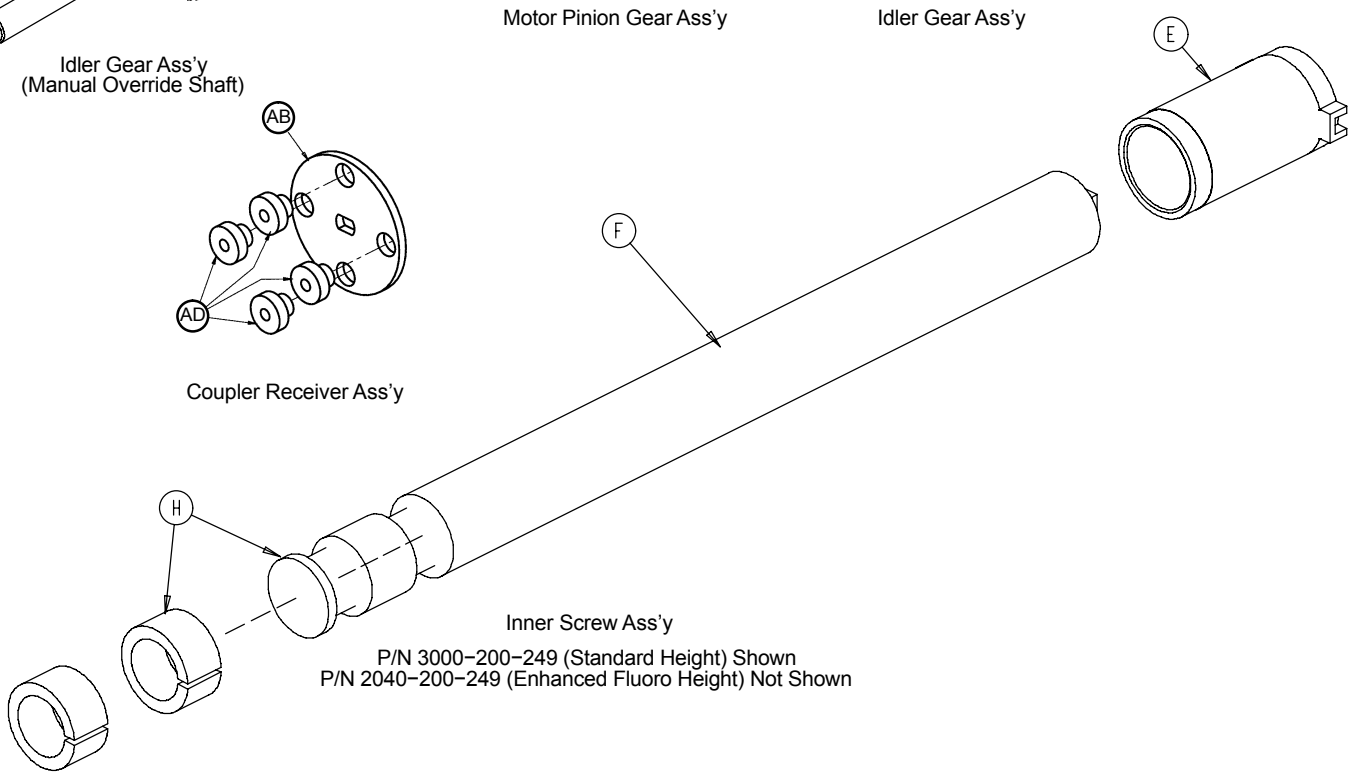

Inner Screw Ass'y

P/N 3000−200−249 (Standard Height) Shown
P/N 2040−200−249 (Enhanced Fluoro Height) Not Shown

Lift Assembly (Common)

Item	Part No.	Part Name	Qty.
A	3000−200−201	Upper Lift Housing	1
B	3000−200−202	Lower Lift Housing	1
C	3000−200−251	Outer Screw	2
D	3000−200−204	Upper Housing Sleeve	2
E	3000−200−205	Upper Stage Nut	2
F	3000−200−249	Inner Screw, Standard Height	2
	2040−200−249	Inner Screw, Enhanced Height	2
G	3000−200−207	Lower Stage Nut	2
H	3000−200−208	Glide Bushing	4
J	3000−200−209	Motor Pinion Gear	1
K	3000−200−210	Idler Gear	2
L	3000−200−252	Output Gear	2
M	(page 83)	Motor Isolation Plate Ass'y	1
N	3000−200−213	Lift Motor	1
	3221−200−213	230V Lift Motor	1
P	3000−200−218	Idler Shaft, Lift	1
Q	3002−200−235	Idler Man. Over. Shaft	1
R	3000−200−220	Input Pinion Shaft	1
S	3000−200−223	Output Gear Thr. Washer	4
T	3000−200−224	Input Gear Thr. Washer	2
U	81−212	Thrust Needle Roller Brg.	1
V	3000−200−226	Pinion Shaft Bushing	6
W	3001−200−228	Mounting Standoff	4
Z	3001−300−19	Isolation Sleeve	4
AA	3000−200−233	Lift Motor Coupler	1
AB	3000−200−234	Coupler Receiver	1
AC	3000−200−241	Crush Washer	2
AD	3000−300−455	Isolation Bushing	4
AE	3000−200−245	Gear Washer	5
AF	3000−200−246	Nylon Washer	1
AG	11−408	Flat Washer	4
AH	3−82	Hex Hd. Cap Screw	4
AJ	4−213	Soc. Hd. Cap Screw	4
AK	58−44	Woodruff Key	3
AM	3−331	Hex Washer Hd. Screw	4
AP	28−121	Retaining Ring	2
AQ	28−97	Retaining Ring	1
AS	11−308	Serrated Belleville Washer	4
AV	3000−300−604	Warning Label	1
AX	3000−200−239	Pot. Drive Gear Shaft	1
AY	3000−200−216	Potentiometer Drive Gear	1

3000−200−723 Isolation Plate Assembly

Assembly part number 3001−200−214 (reference only)

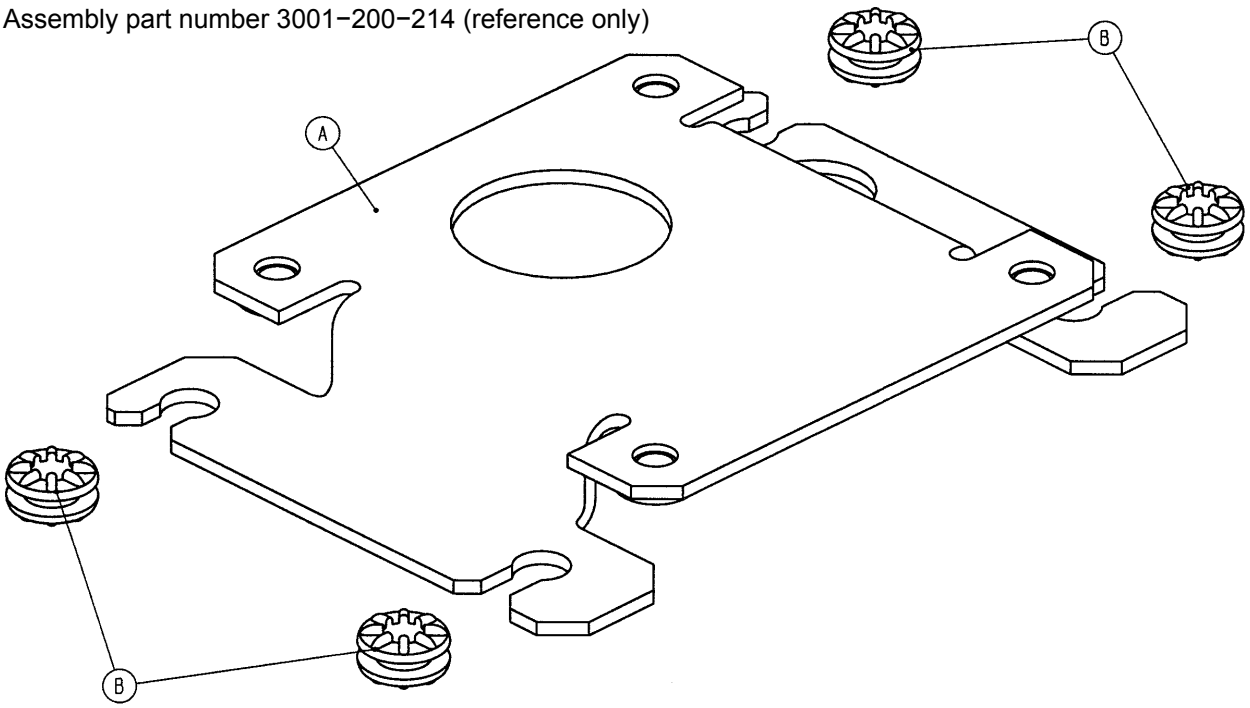

Item	Part No.	Part Name	Qty.
A	3001−200−213	Isolation Plate	1
B	3000−300−442	Grommet	4

Brake Shaft Assembly, Left and Right

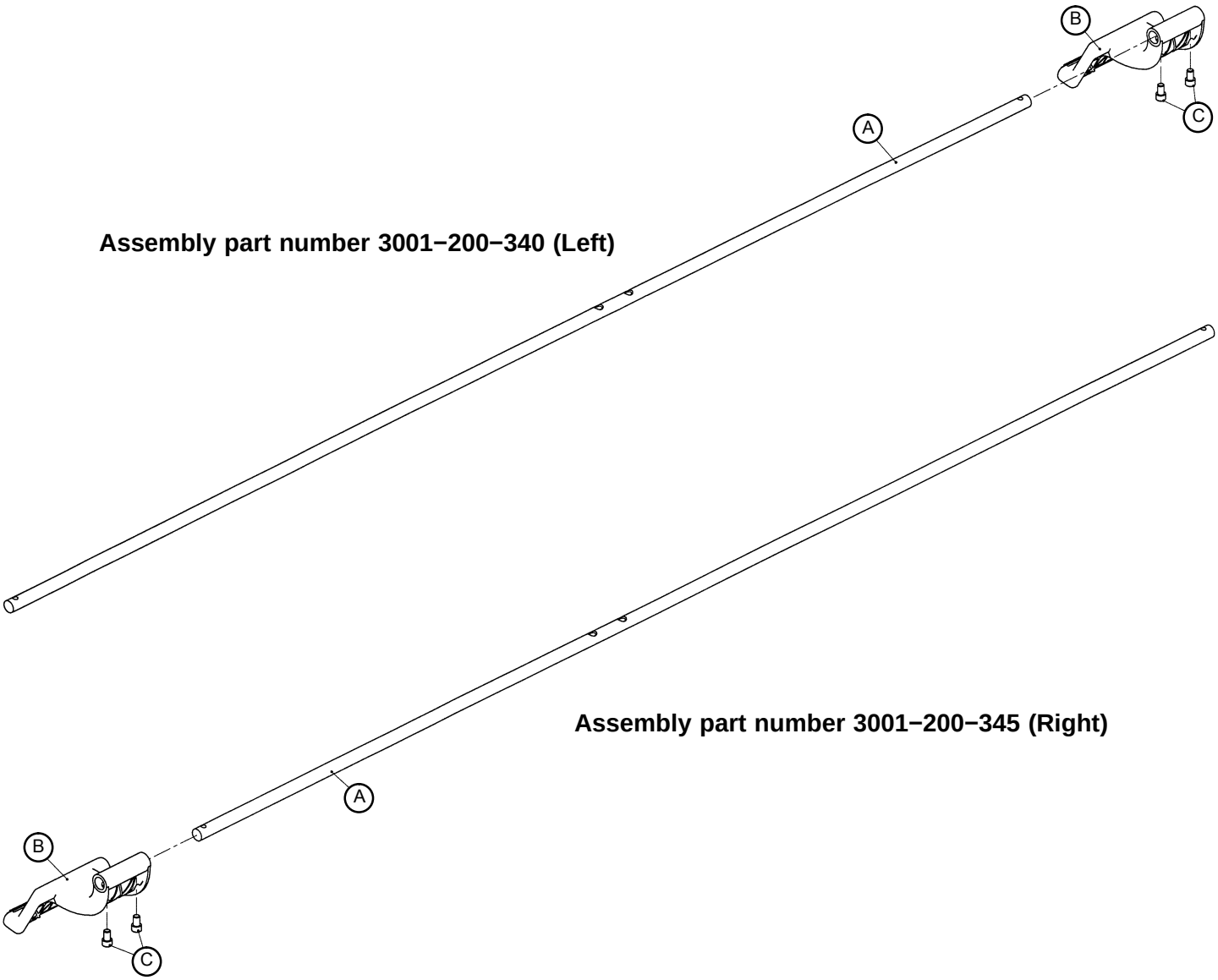

Item	Part No.	Part Name	Qty.
A	3000−200−314	Brake Shaft	1
B	3001−200−325	Brake Pedal	1
C	4−270	Soc. Hd. Cap Screw	2

3002−201−330 Brake Crank Assembly

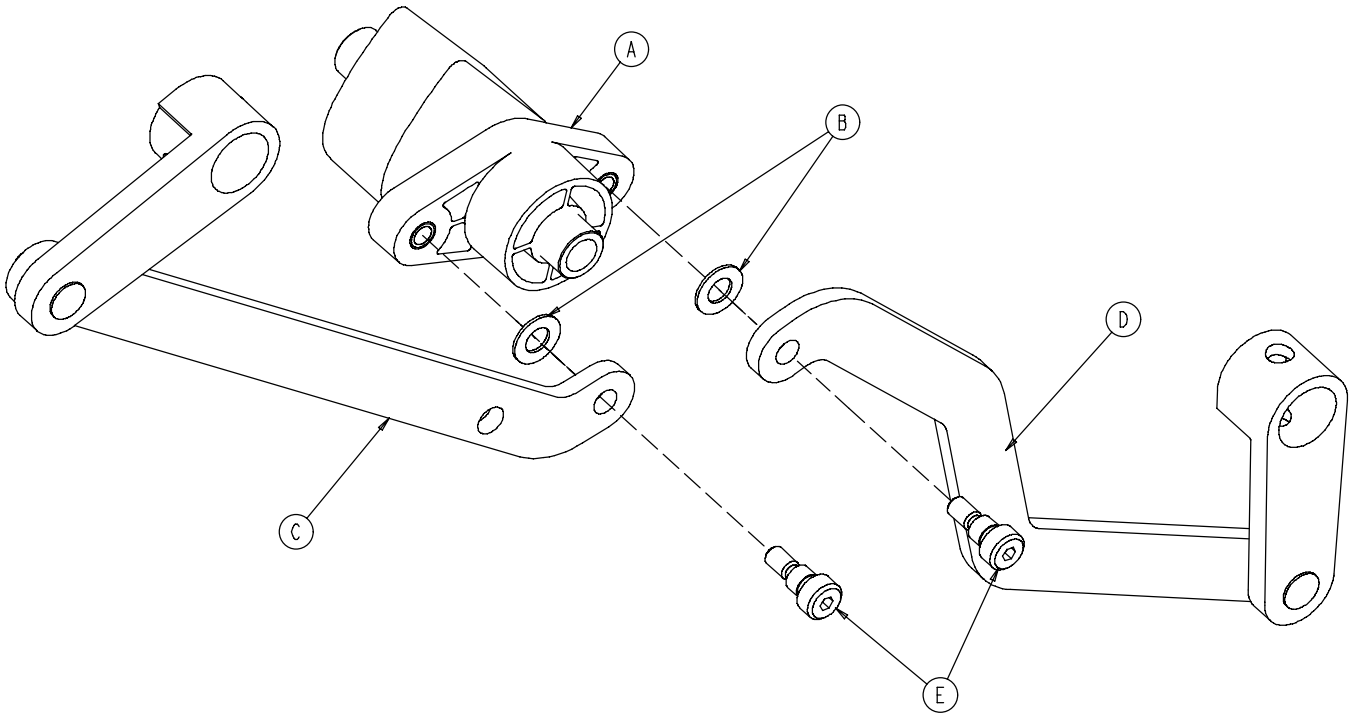

Item	Part No.	Part Name	Qty.
A	3002−201−309	Brake Cam Shaft Crank	1
B	14−4	Washer	2
C	3002−200−331	Brake Link	1
D	3002−200−332	Dog Leg Brake Link	1
E	2−108	Socket Hd. Shoulder Screw	2

Brake Bar Assembly

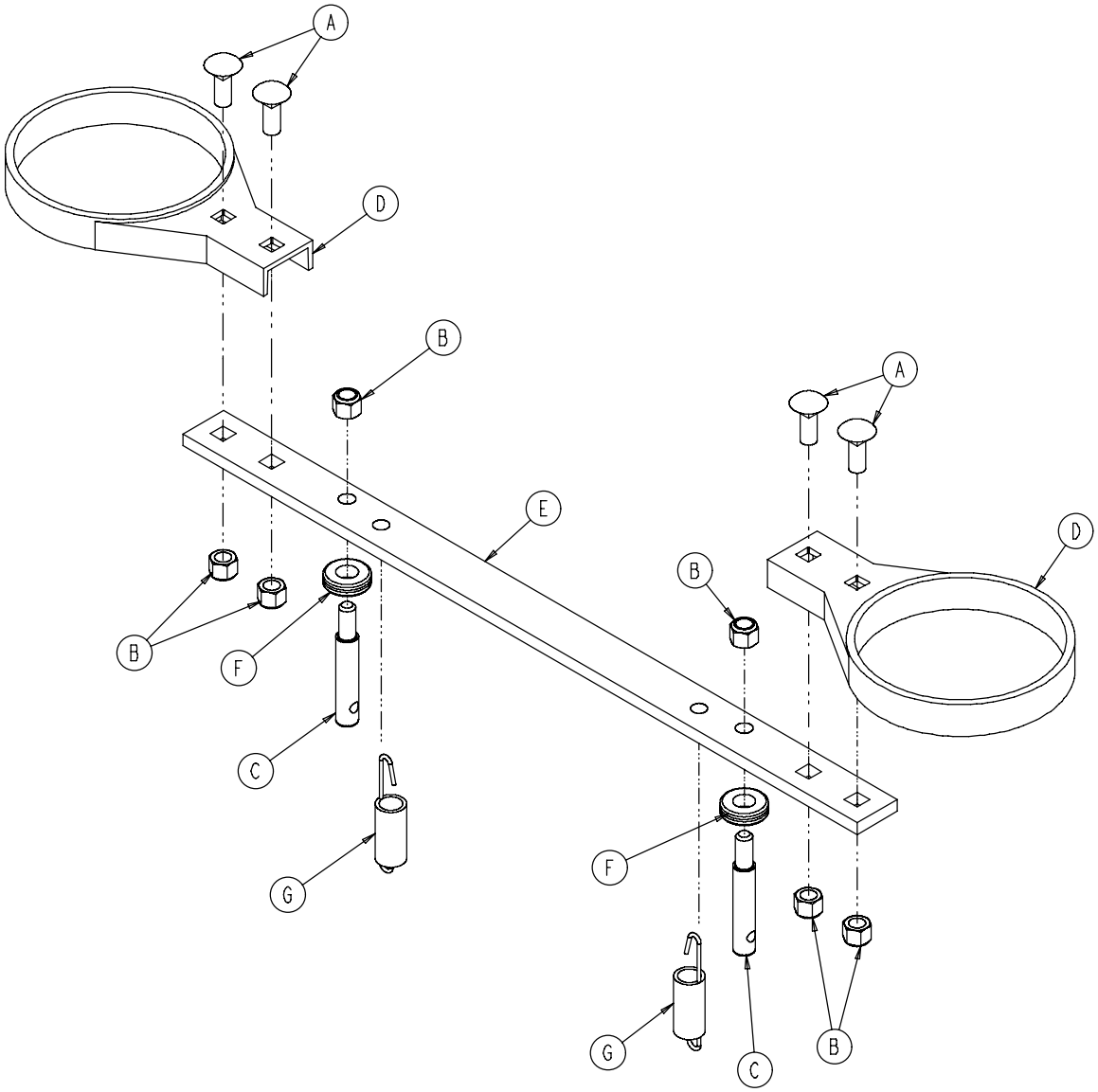

Item	Part No.	Part Name	Qty.
A	5−18	Carriage Bolt	4
B	16−35	Nylock Hex Nut	6
C	3000−200−318	Guide Pin	2
D	3000−200−321	Brake Ring	2
E	3000−200−323	Brake Bar	1
F	3000−200−324	Brake Bar Bumper	2
G	3002−200−310	Brake Bar Return Spring	2

3001−200−60 6” Caster Assembly

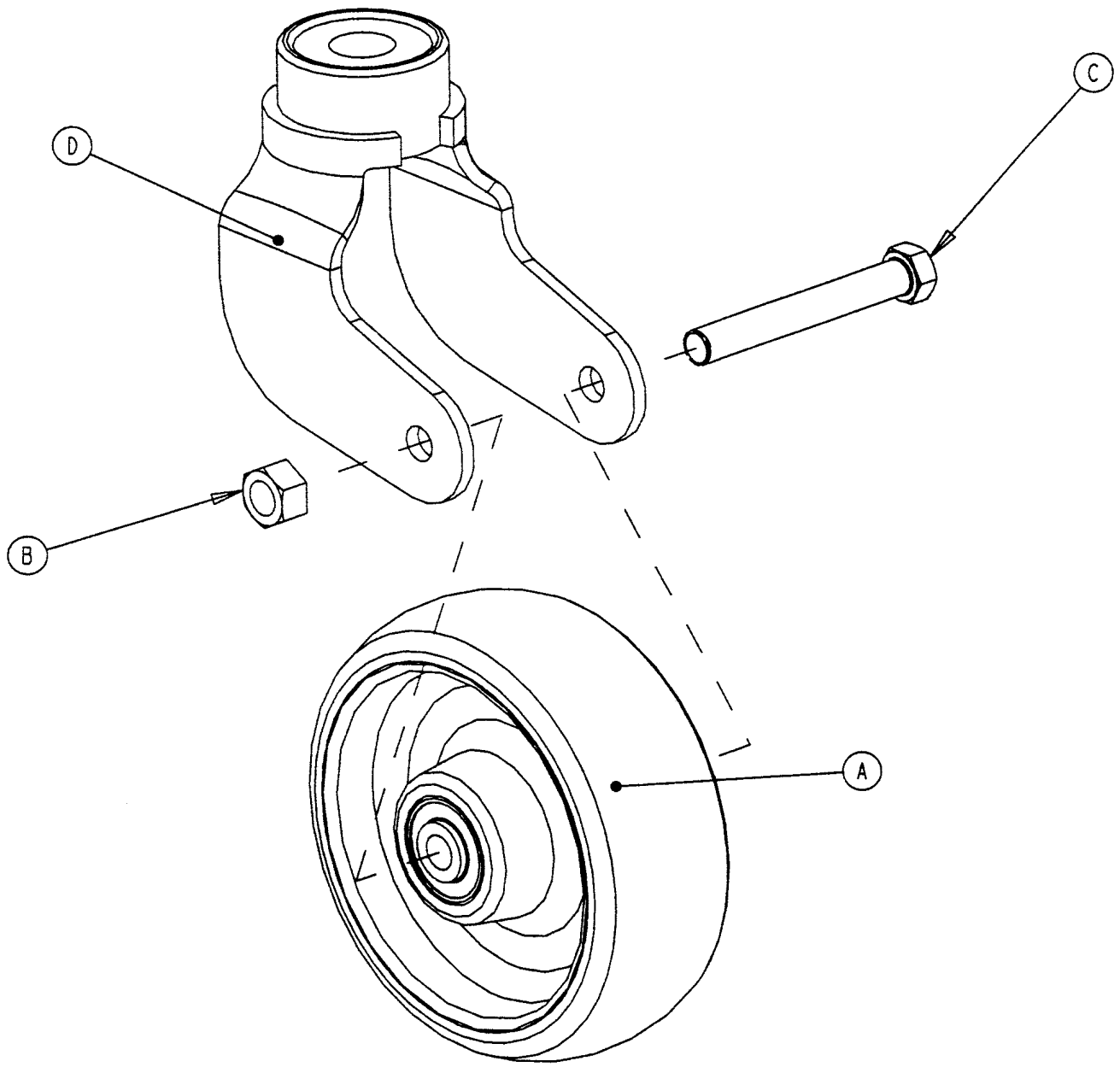

Item	Part No.	Part Name	Qty.
A	(page 89)	Wheel Assembly	1
B	16−60	Lock Nut	1
C	3−342	Hex Hd. Cap Screw	1
D	3001−200−61	Caster Horn w/Bearing	1

3001−200−50 6” Steer Caster Assembly

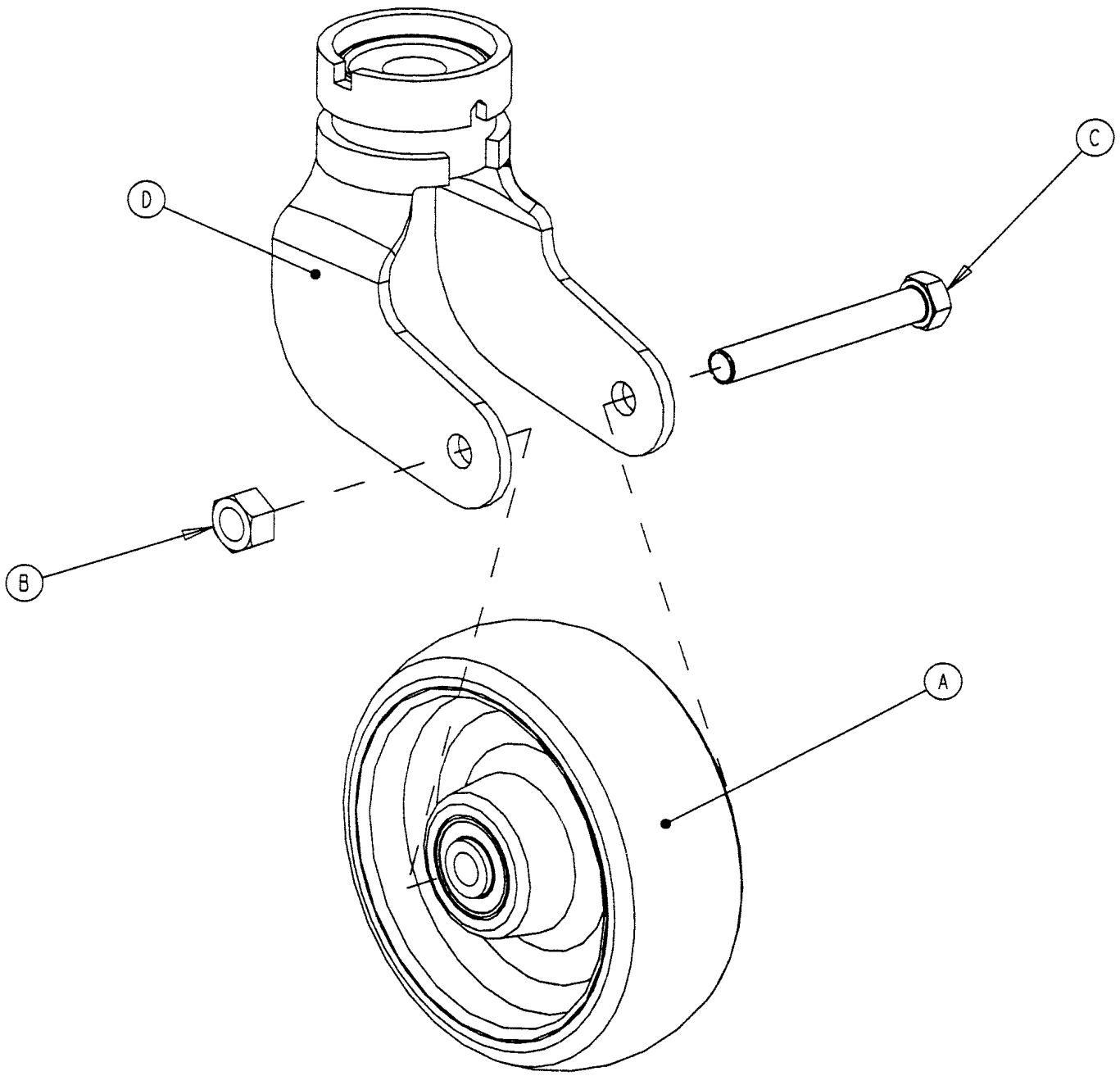

Item	Part No.	Part Name	Qty.
A	(page 89)	Wheel Assembly	1
B	16−60	Lock Nut	1
C	3−342	Hex Hd. Cap Screw	1
D	3001−200−51	Steer Caster Horn w/Bearing	1

5000−2−10 6” Molded Wheel Assembly

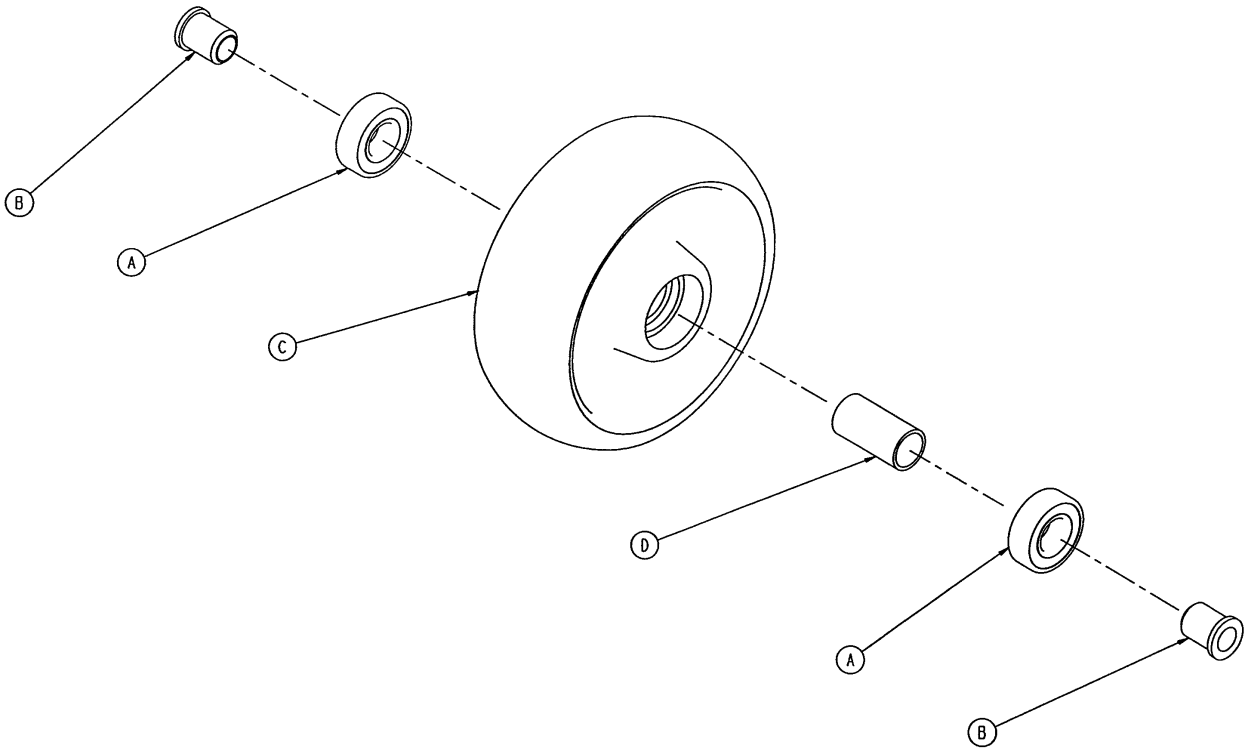

Item	Part No.	Part Name	Qty.
A	81−226	Bearing	2
B	715−1−255	Wheel Bushing	2
C	5000−2−20	Molded Wheel	1
D	6060−2−46	Bearing Spacer	1

3001−200−90 Optional 8” Caster Assembly

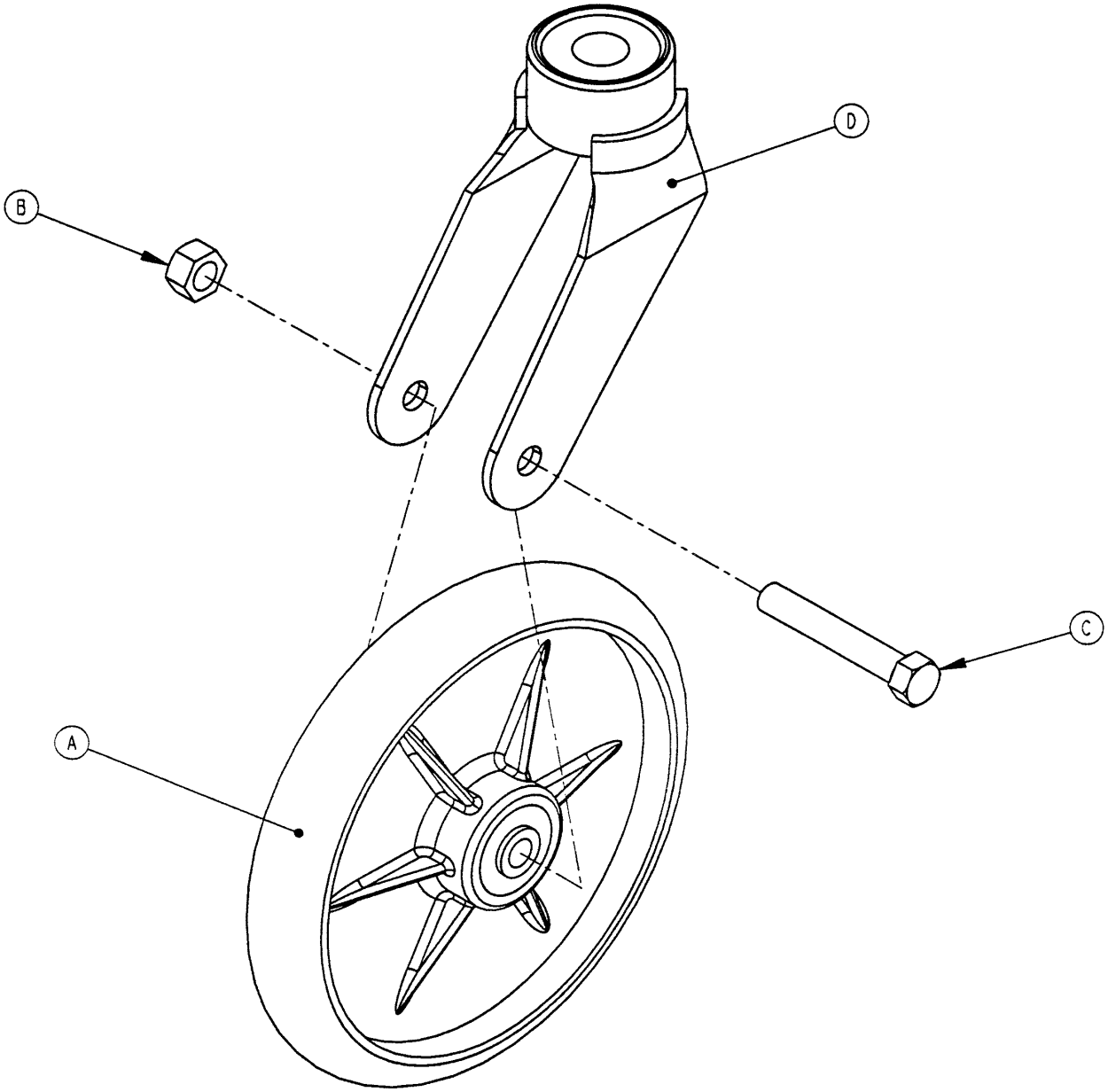

Item	Part No.	Part Name	Qty.
A	(page 93)	Wheel Assembly	1
B	16−60	Hex Nut	1
C	3−99	Hex Hd. Cap Screw	1
D	3001−200−76	Caster Horn	1
E	2025−1−47	Right Siderail Cover (not shown)	1
F	2025−1−48	Left Siderail Cover (not shown)	1

NOTE
The hex head cap screw (item C) must be threaded through the caster horn in the direction shown to avoid damaging the plastic caster covers.

3001−200−80 Optional 8” Steer Caster Assembly

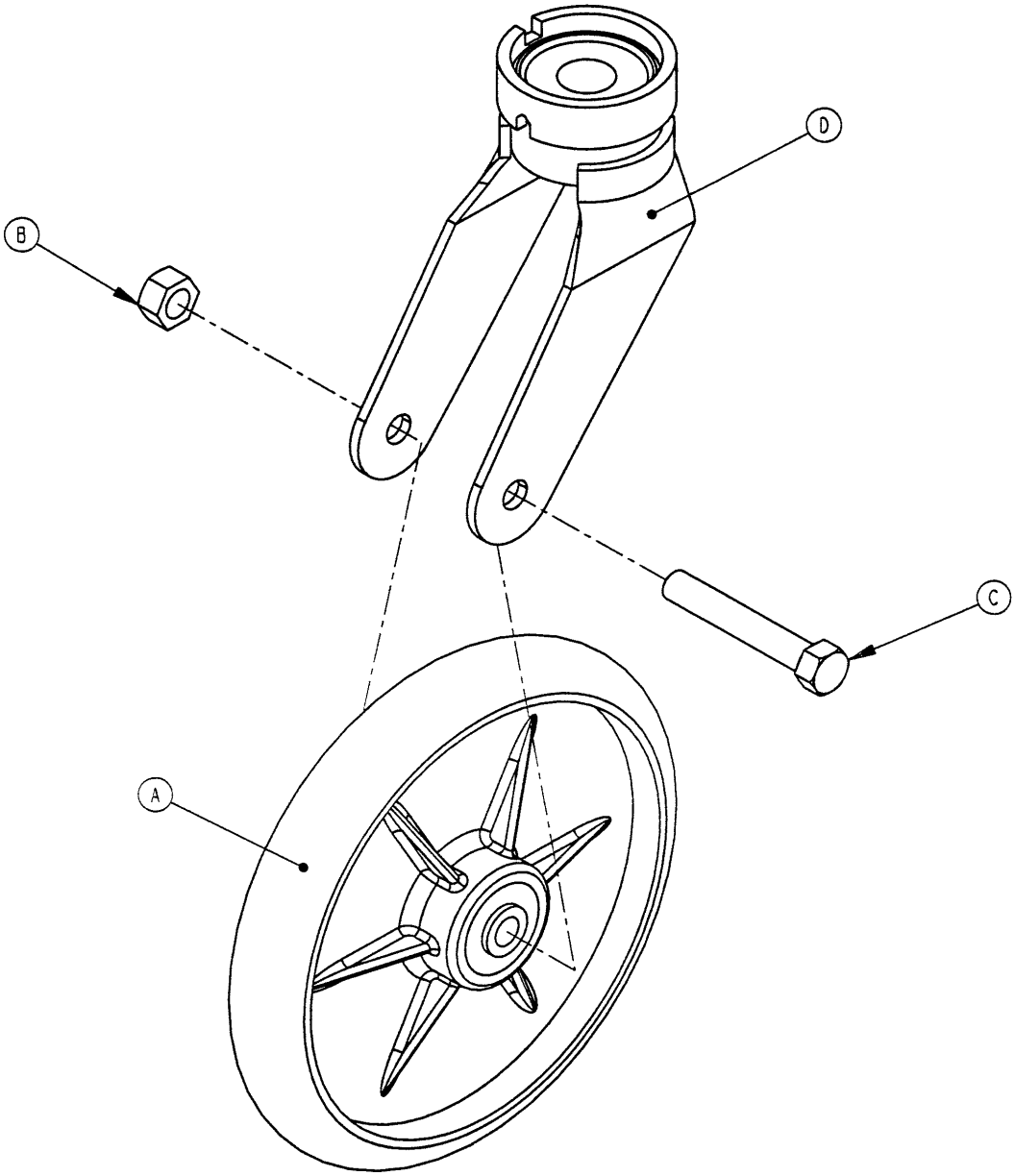

Item	Part No.	Part Name	Qty.
A	(page 93)	Wheel Assembly	1
B	16−60	Hex Nut	1
C	3−99	Hex Hd. Cap Screw	1
D	3001−200−81	Caster Horn	1
E	2025−1−47	Right Siderail Cover (not shown)	1
F	2025−1−48	Left Siderail Cover (not shown)	1

NOTE
The hex head cap screw (item C) must be threaded through the caster horn in the direction shown to avoid damaging the plastic caster covers.

3002−300−10 Base Uni−Pan Cover Assembly

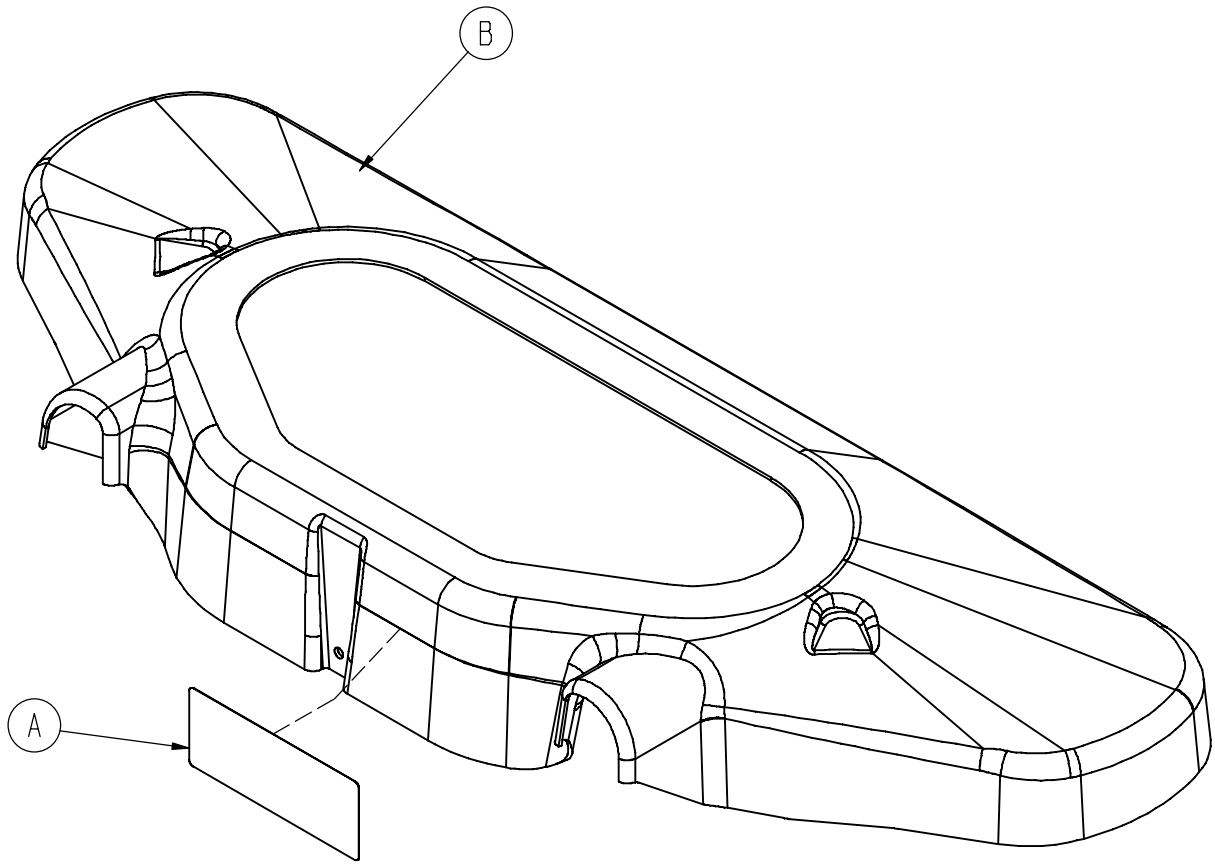

Item	Part No.	Part Name	Qty.
A	988−2−708	Service Caution Label	1
B	3002−300−9	Uni−Pan Cover	1

715−2−25 Optional 8” Wheel Assembly

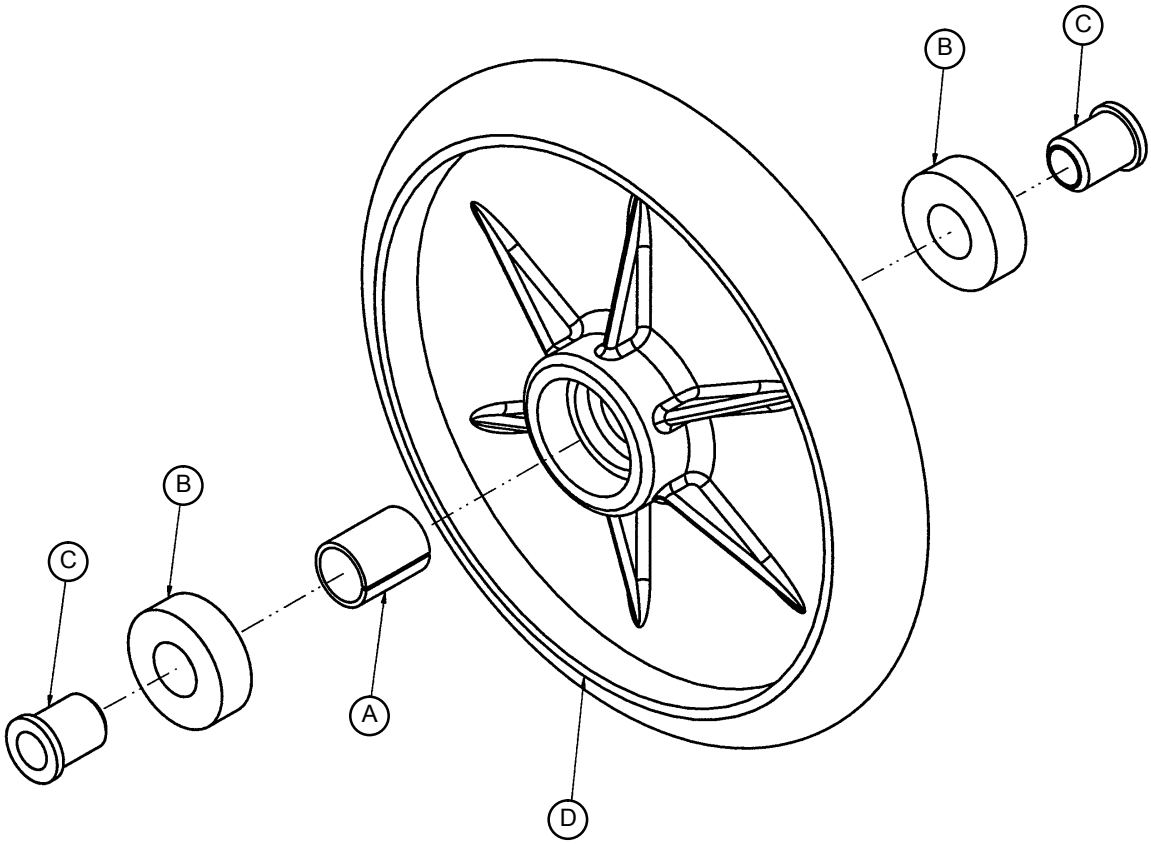

Item	Part No.	Part Name	Qty.
A	52−503	Bearing Spacer	1
B	81−226	Bearing	2
C	715−1−255	Wheel Bearing	2
D	715−2−124	Wheel	1

Optional Epic+ Base Assembly

Assembly part number
2030−201−210 (reference only)

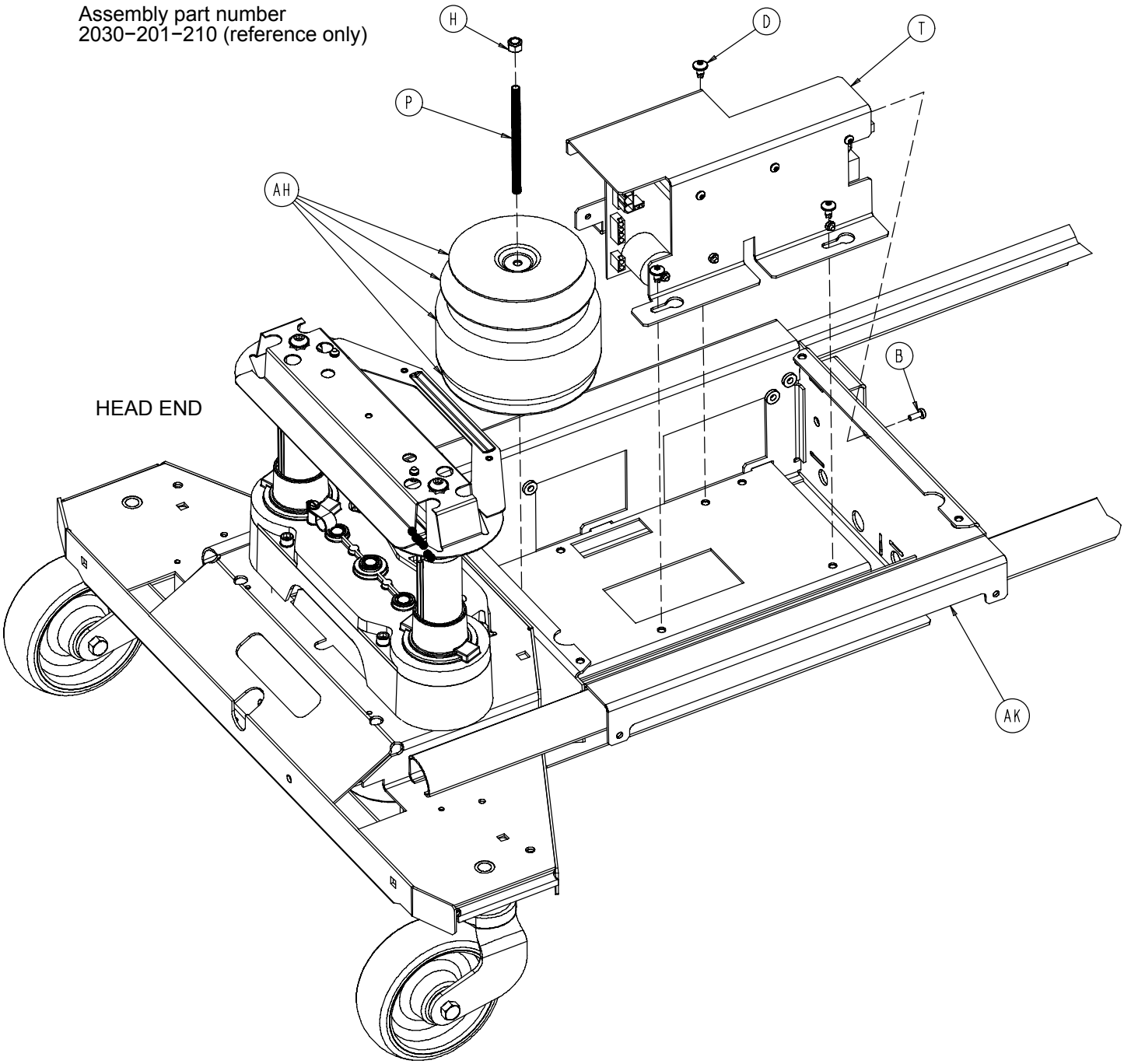

Optional Epic+ Base Assembly

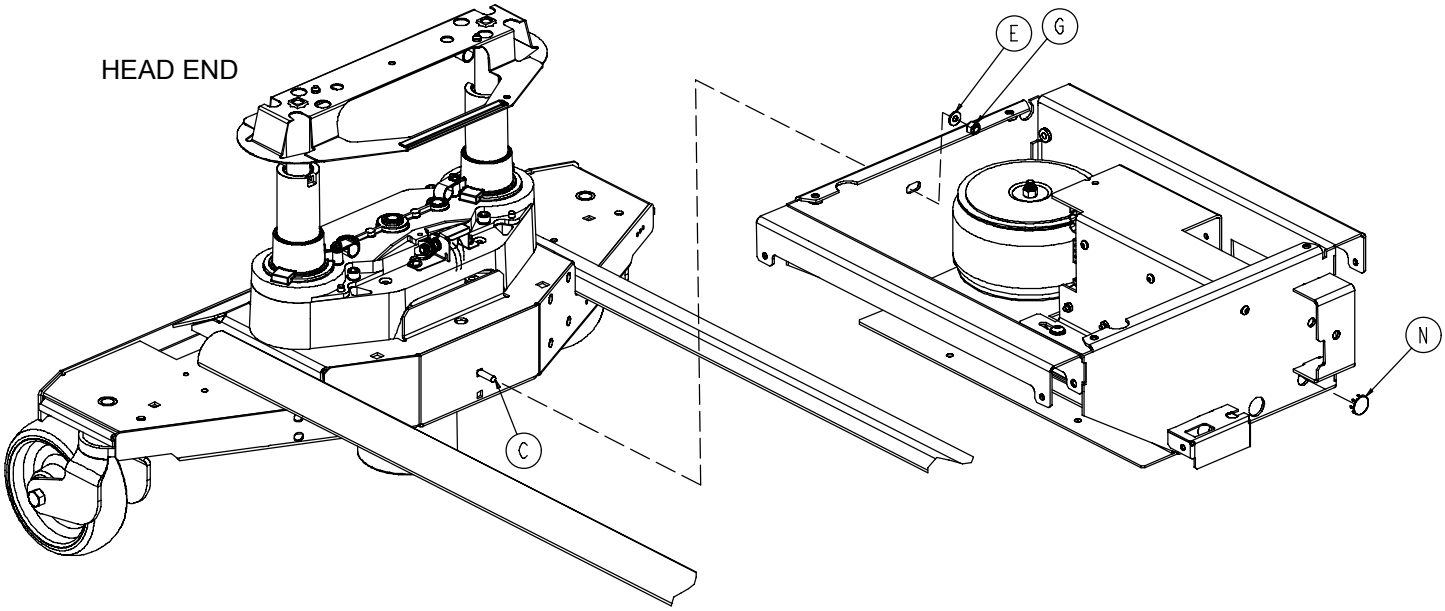

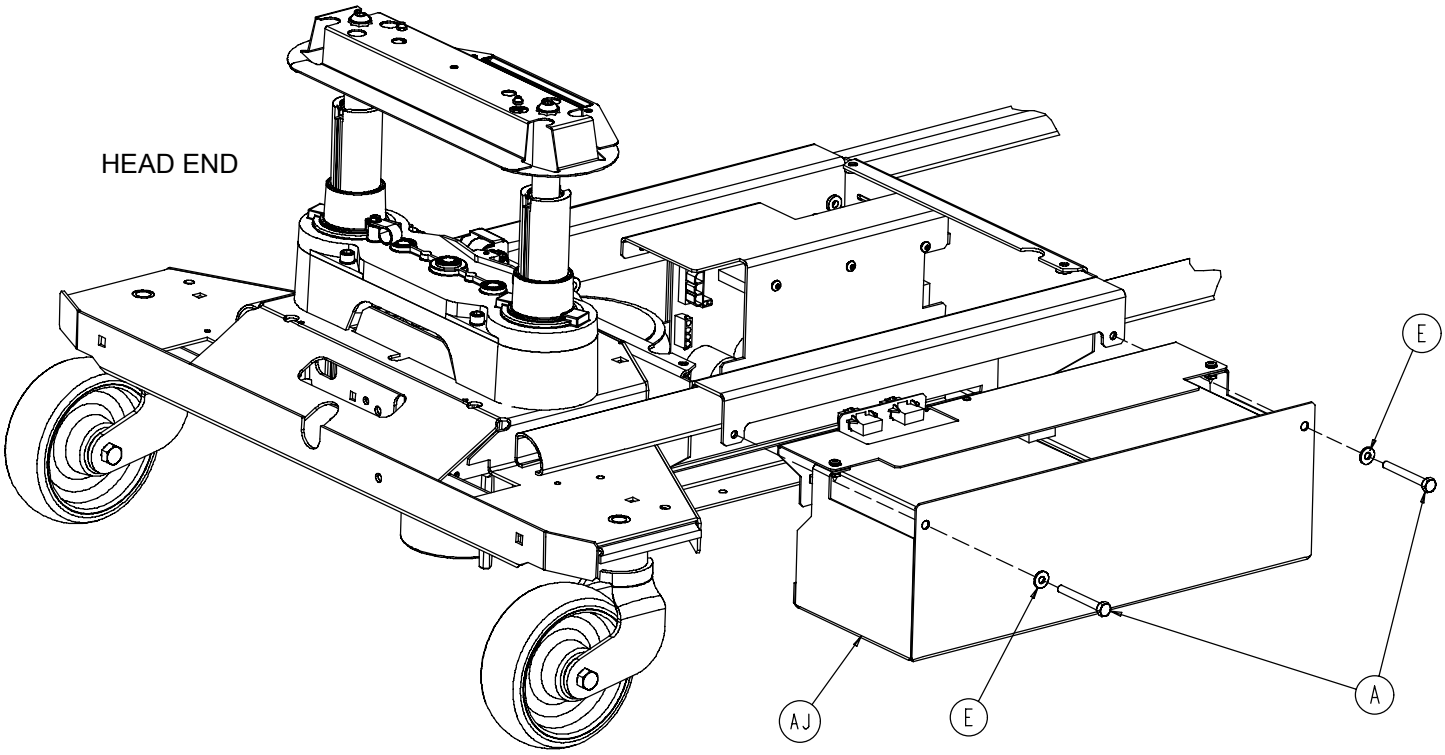

Optional Epic+ Base Assembly

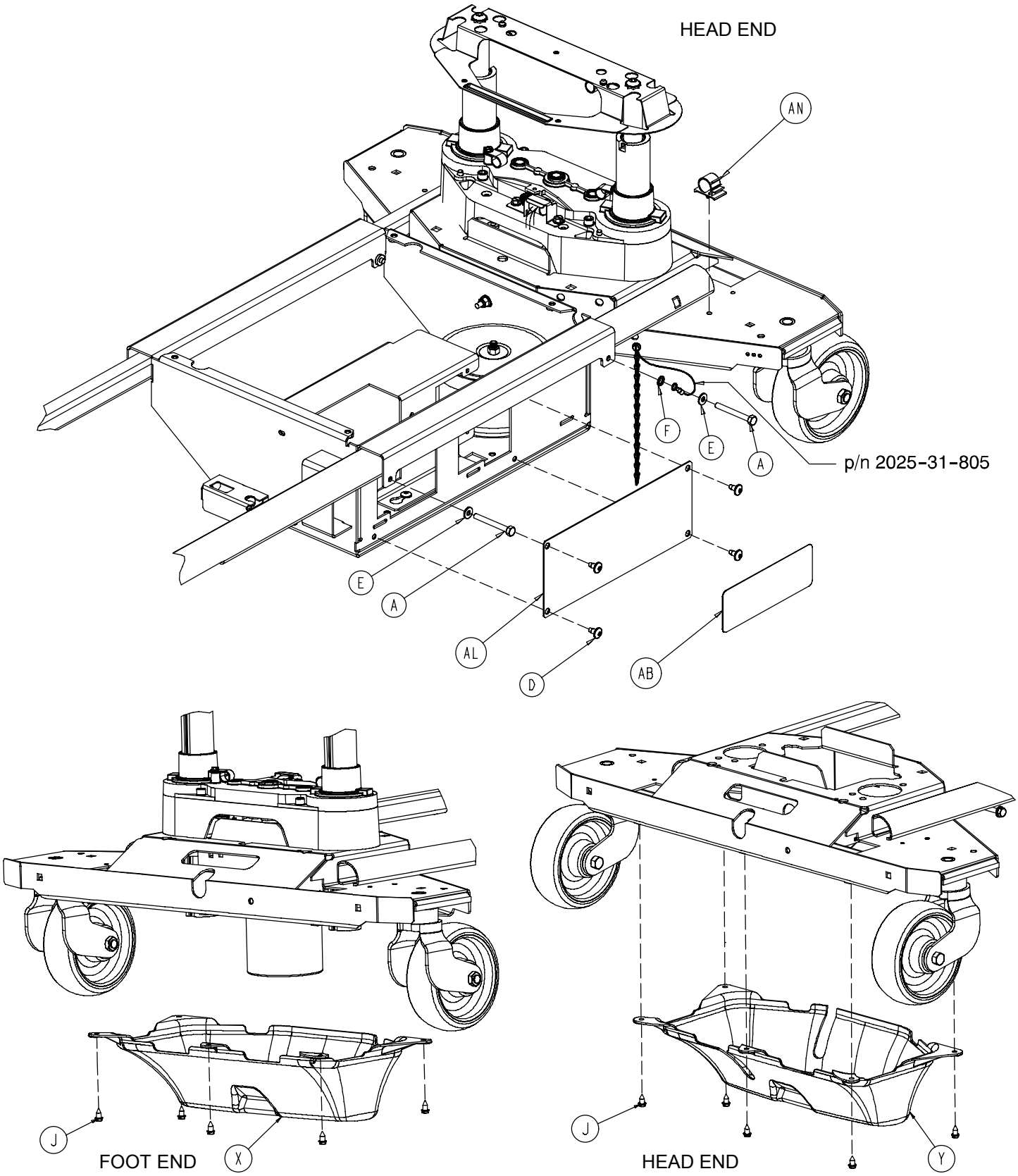

Optional Epic+ Base Assembly

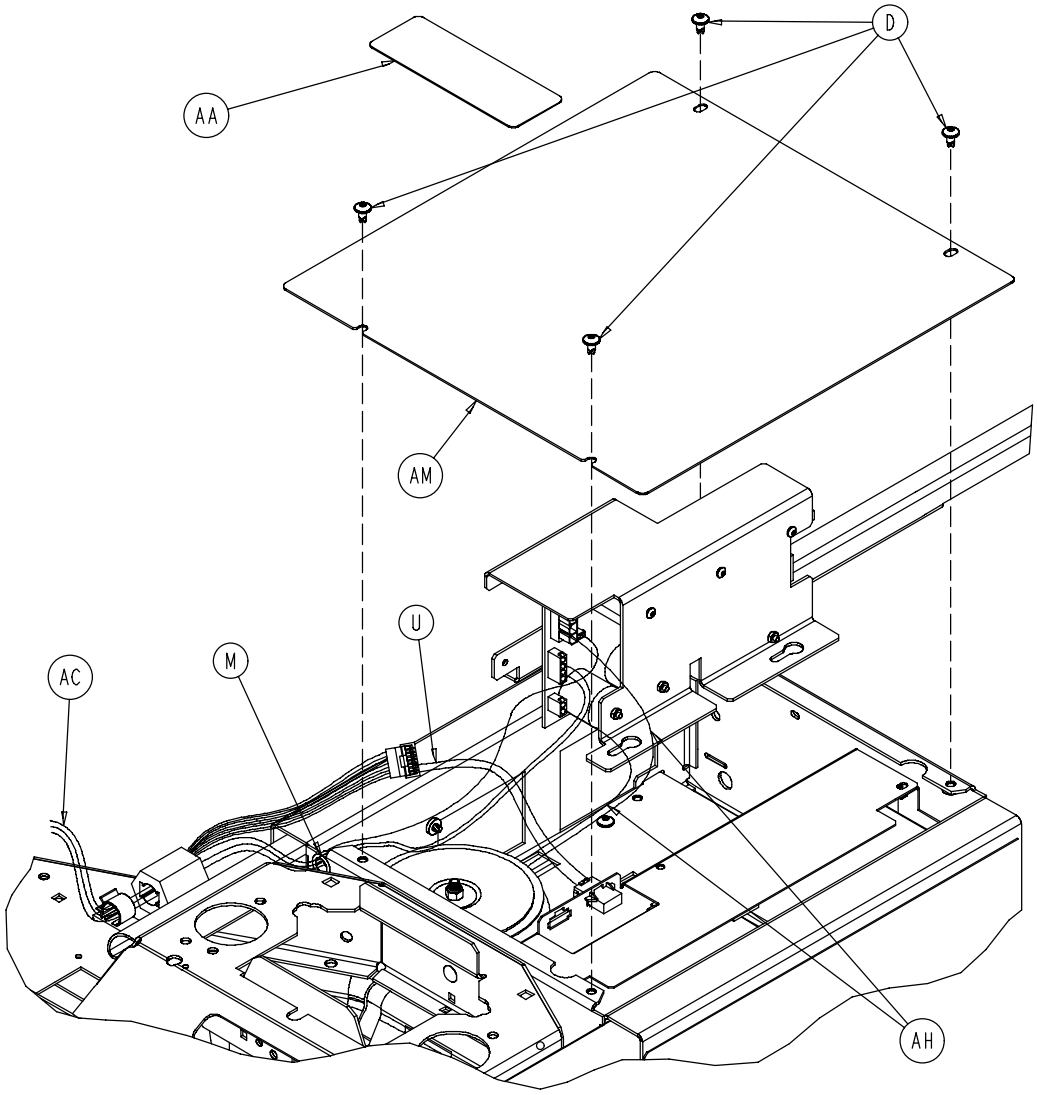

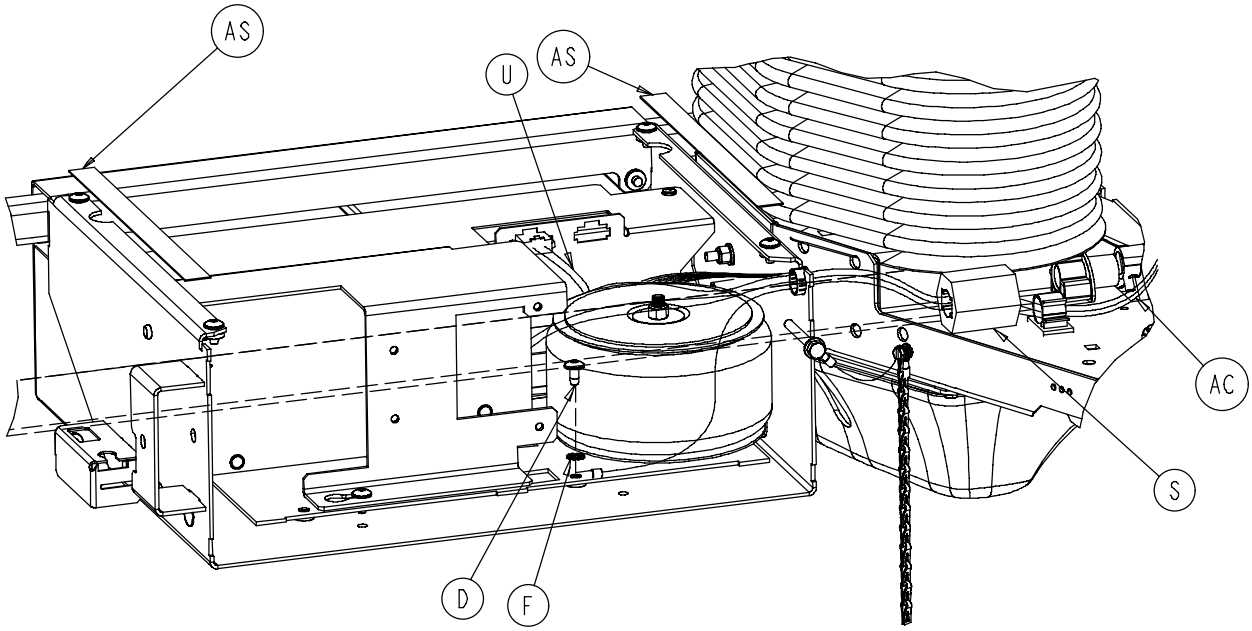

Optional Epic+ Base Assembly

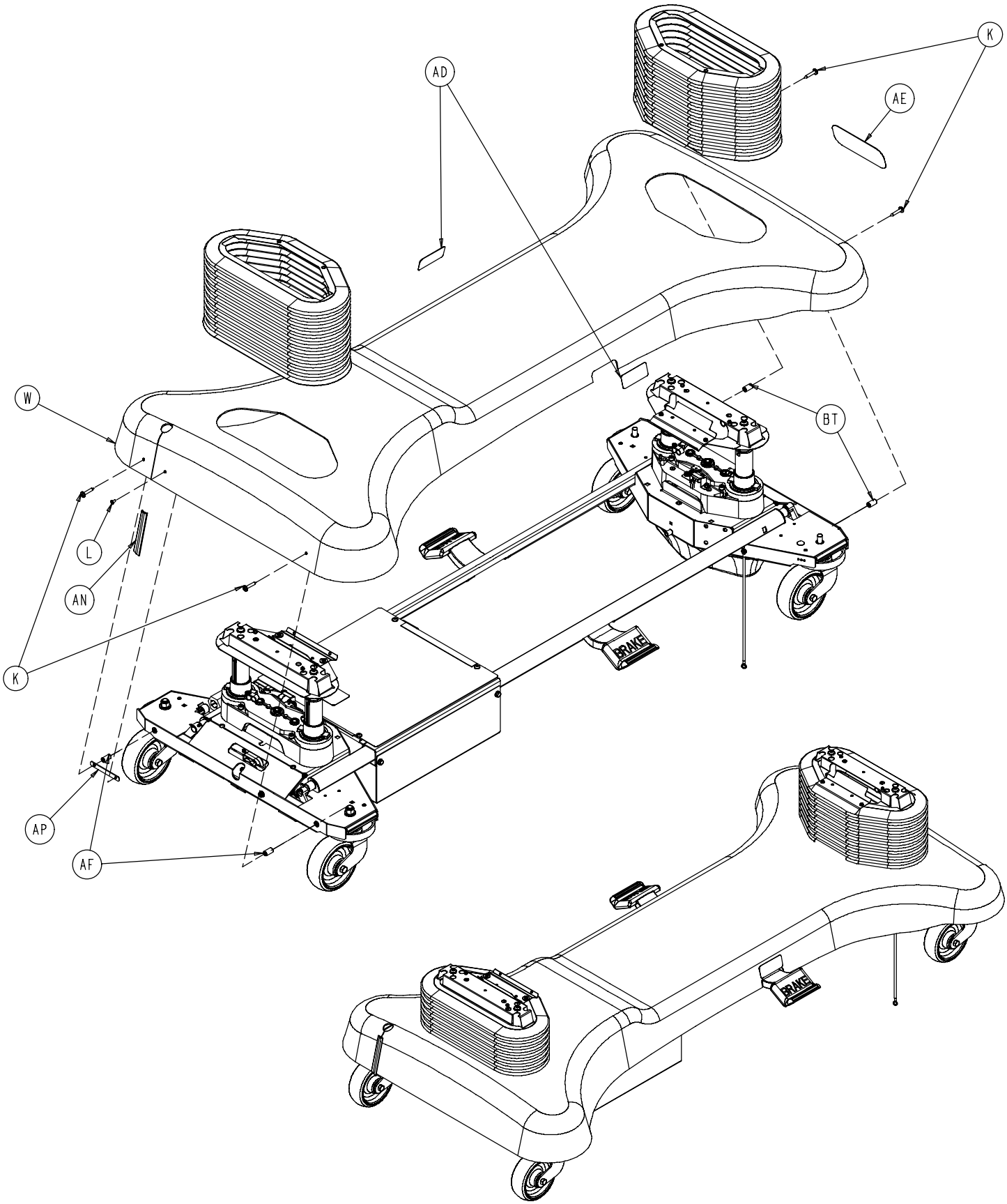

Optional Epic+ Base Assembly

Item	Part No.	Part Name	Qty.
A	3−32	Hex Hd. Cap Screw	4
B	4−301	Pan Hd. Machine Screw	1
C	5−17	Carriage Bolt	1
D	7−52	Truss Hd. Torx	13
E	11−63	Washer	5
F	13−10	External Tooth Star Washer	5
G	16−28	Nylock Nut	1
H	16−36	Nylock Nut	1
J	23−25	Hex Washer Hd. Screw	10
K	23−281	Self−Tapping Screw	4
L	25−79	Pop Rivet	1
M	30−38	Split Bushing	1
N	37−221	Hole Plug	1
P	58−90	Threaded Stud	1
R	59−133	Push−Mount Wire Clip	1
S	59−192	Split Ferrite	1
T	(page 100)	Base Power Assembly	1
U	2030−80−802	DC Jumper Assembly	1
W	2030−201−5	Hood Shroud	1
X	(page 101)	Foot End Bottom Cover Ass'y	1
Y	(page 101)	Head End Bottom Cover Ass'y	1
Z	2040−1−100	Drive Wheel Position Label	1
AA	2040−1−101	Charger Box Cover Label	1
AB	2040−1−102	Power Board Cover Label	1
AC	2040−301−809	Umbilical Cable Assembly	1
AD	3000−200−601	Brake Label	2
AE	3000−200−602	Stryker Logo Label	1
AF	3000−300−428	Gatch Link Sleeve	4
AG	3000−300−113	Wire Tie	2
AH	3002−1−10	Transformer	1
AJ	(page 102)	Battery Tray Assembly	1
AK	3002−1−50	Charger Box Weldment	1
AL	3002−1−68	Power Board Cover	1
AM	3002−1−71	Charger/Inverter Cover	1
AN	3002−1−78	Hood Slot Trim	1
AP	3002−1−79	Hood Slot Trim Bracket	1
AR	3002−1−802	Inverter/Battery Cable	1
AS	7000−1−326	10" Foam Tape	2

2030−1−30 Epic+ Base Option Power Assembly

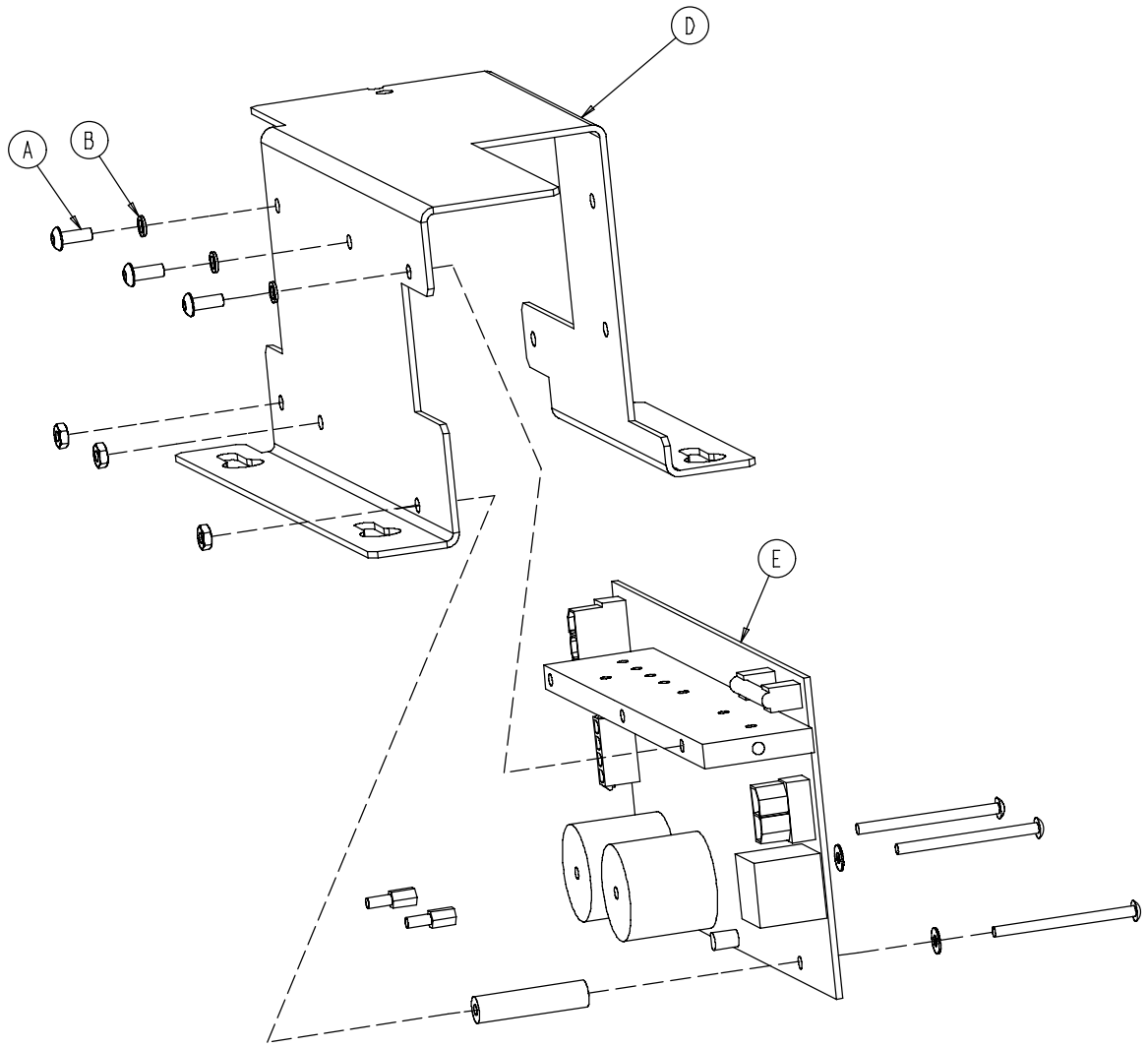

Item	Part No.	Part Name	Qty.
A	4−263	But. Hd. Cap Screw	3
B	12−6	Helical Lock Washer	3
D	3002−1−17	Charger/Inverter Heat Bracket	1
E	3002−1−930	Charger/Inverter Board	1

3001−200−22 Foot End Bottom Cover Assembly

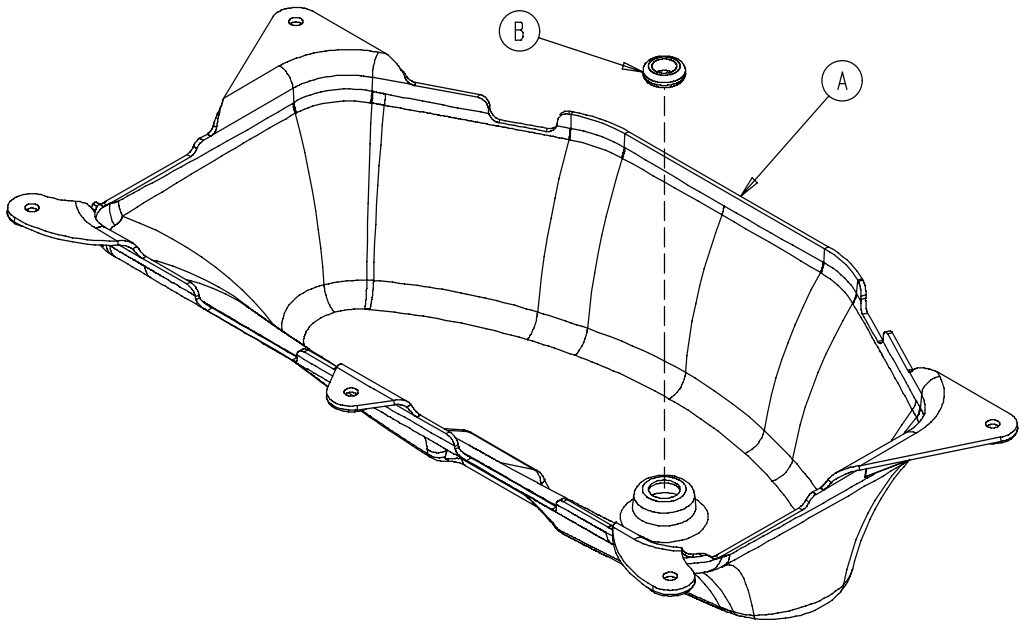

Item	Part No.	Part Name	Qty.
A	3002−1−100	Foot End Bottom Cover	1
B	3000−000−039	Grommet	1

2040−1−17 Head End Bottom Cover

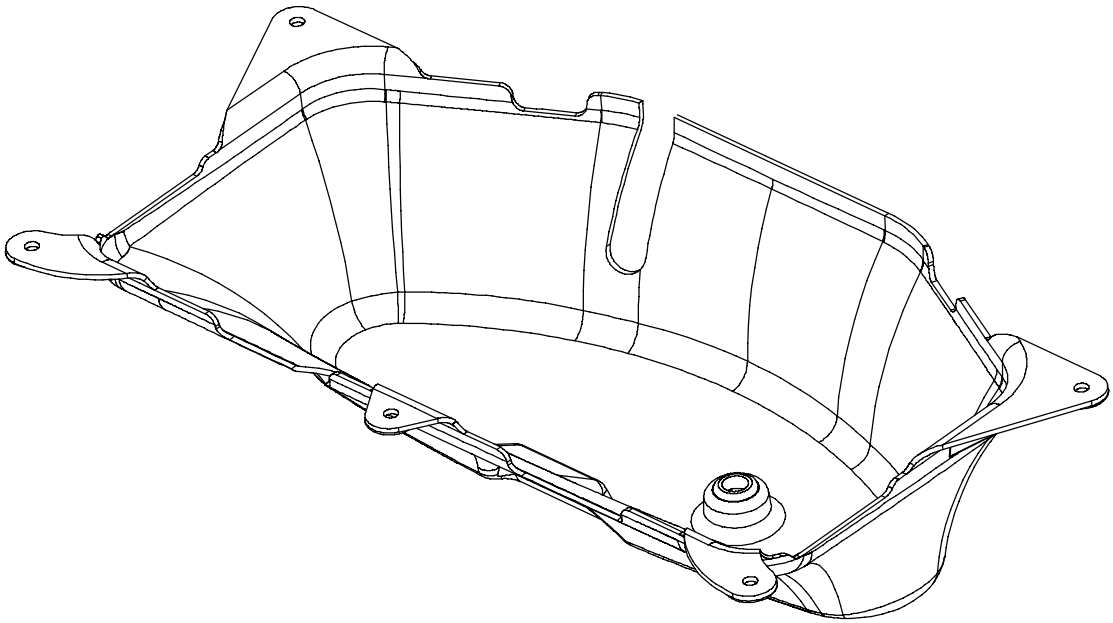

Epic+ Battery Assembly

Assembly part number 3002−1−15 (reference only)

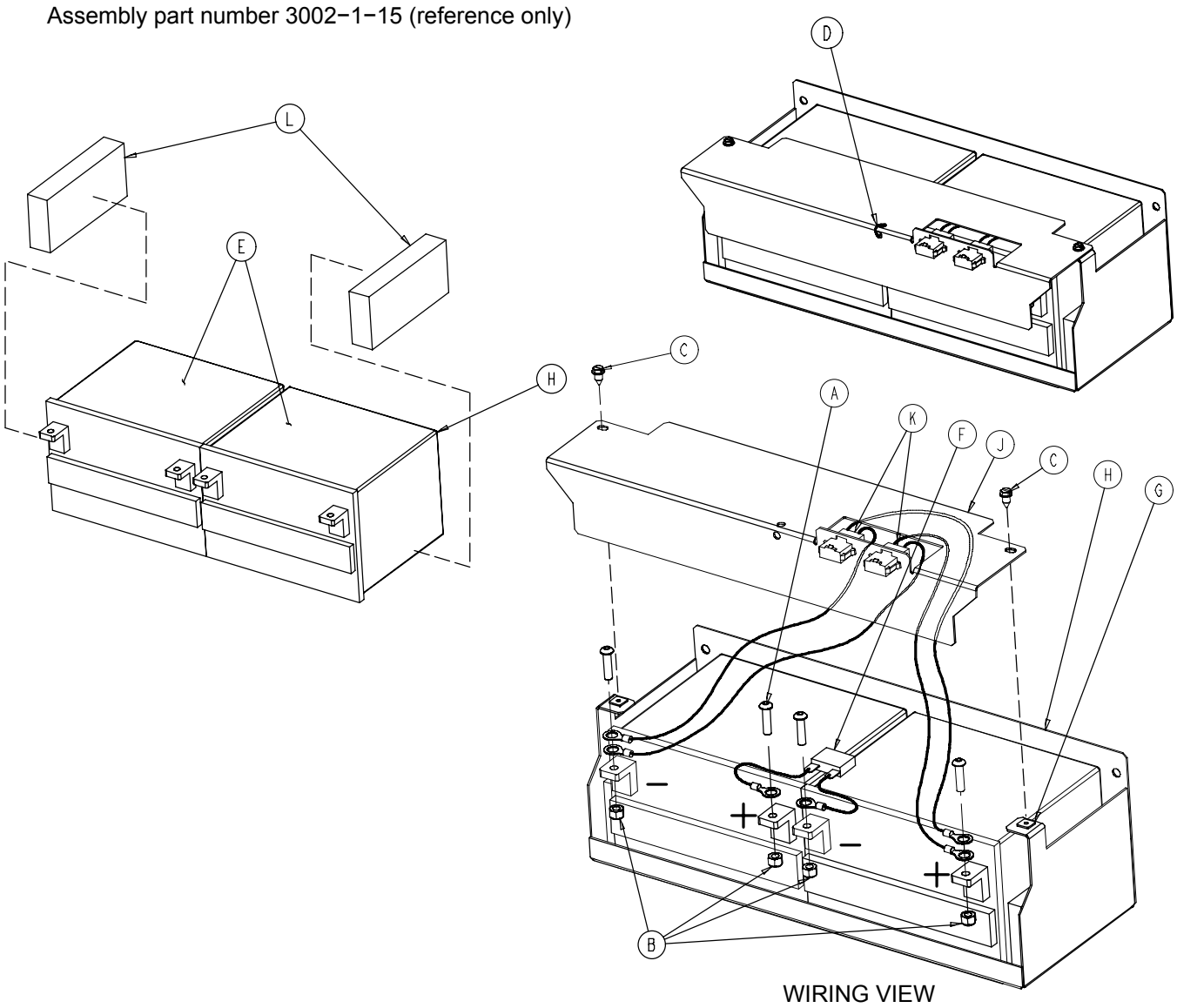

Item	Part No.	Part Name	Qty.
A	4−46	But. Hd. Cap Screw	4
B	16−28	Nylock Nut	4
C	23−25	Hex Washer Hd. Screw	2
D	38−151	Cable Tie	1
E	2040−1−70	Battery	2
F	2040−1−802	Battery Jumper Cable	1
G	3000−300−2	Push Nut	2
H	3002−1−69	Battery Tray	1
J	3002−1−91	Terminal Guard	1
K	3002−1−803	Battery Harness Cable	2
L	3002−101−43	Foam Spacer	2

Replacement Kit Part Number (Batteries Only) − 2040−700−13

Litter Assembly and Options

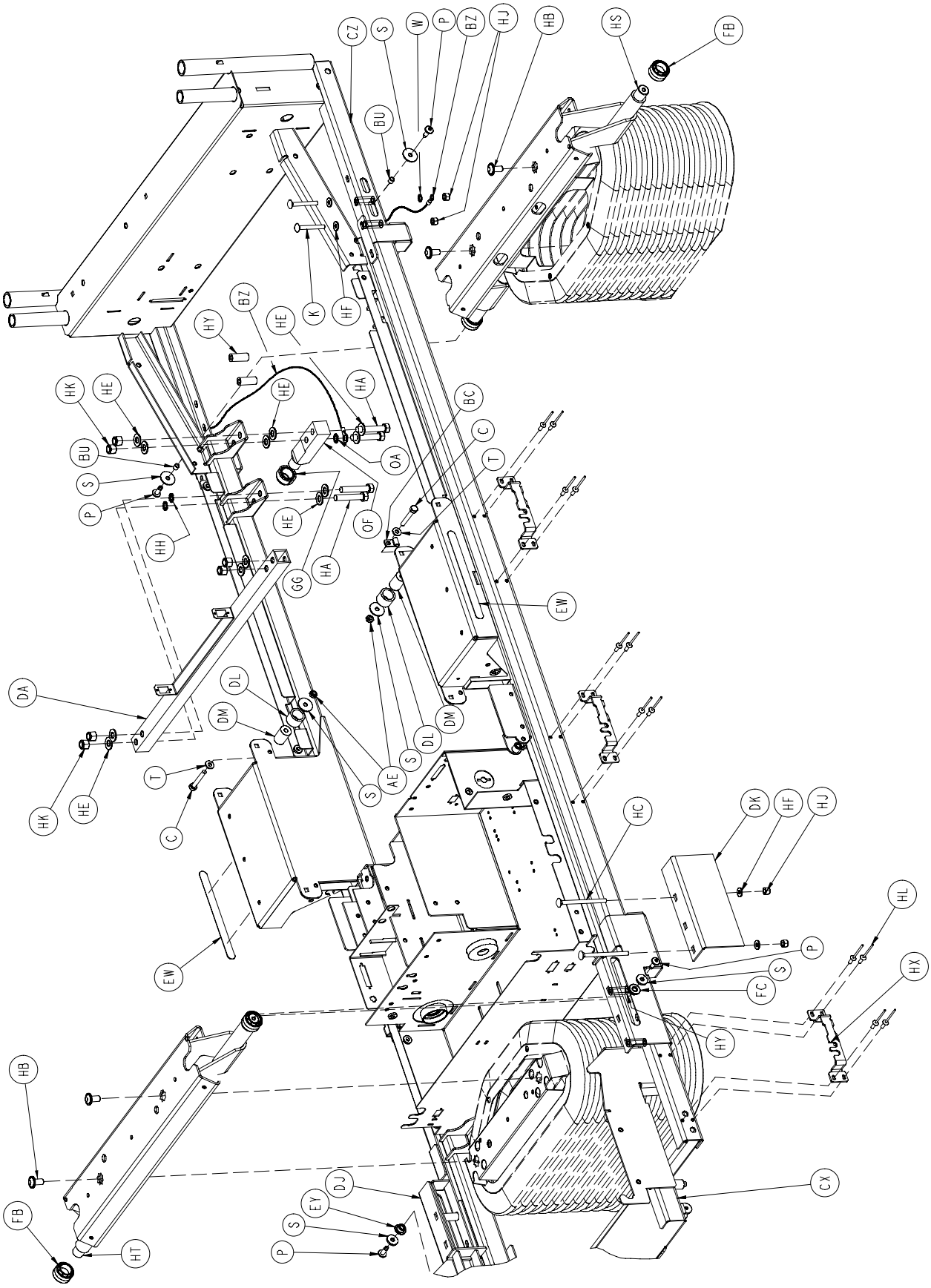

Litter Assembly and Options

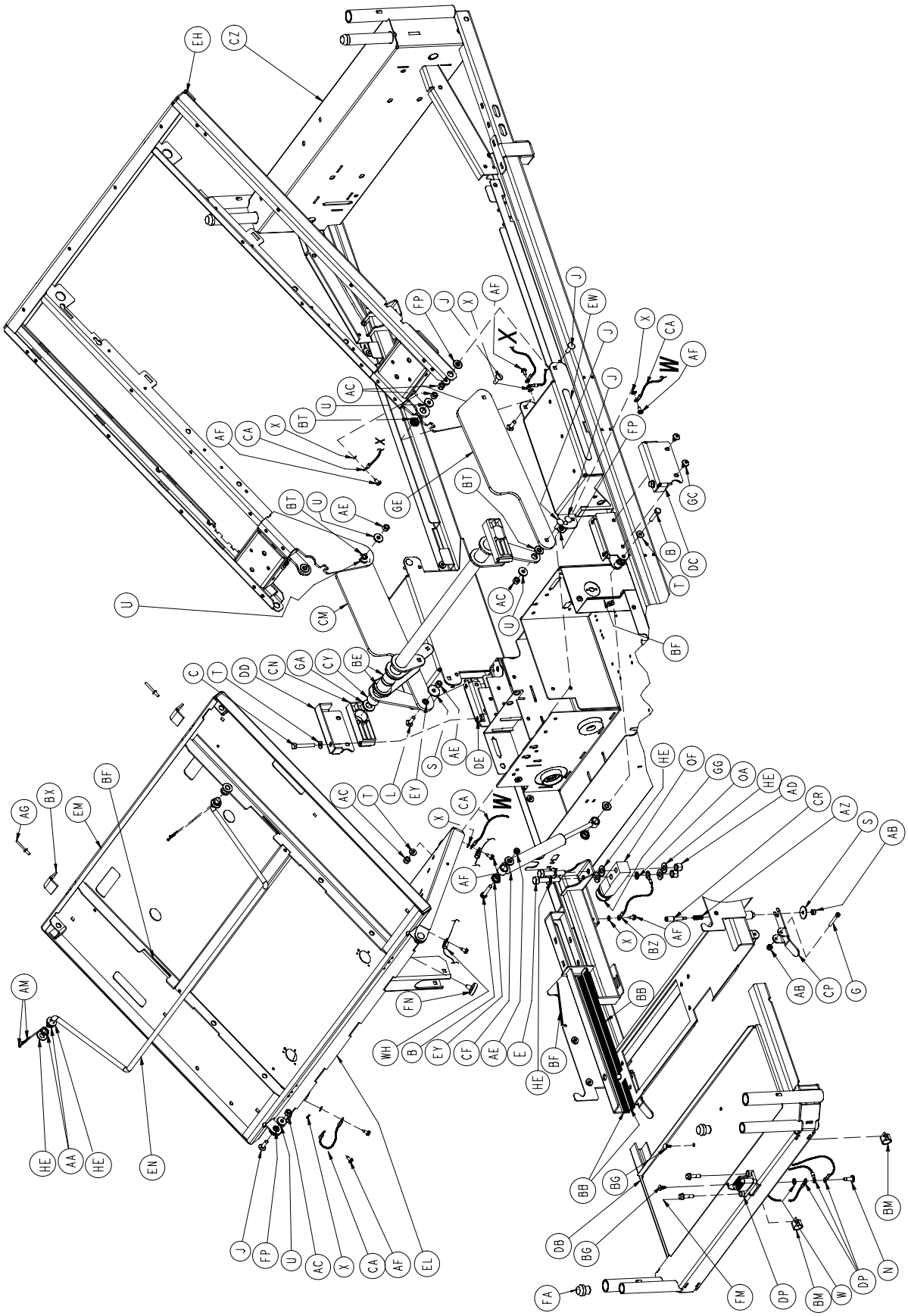

Litter Assembly and Options

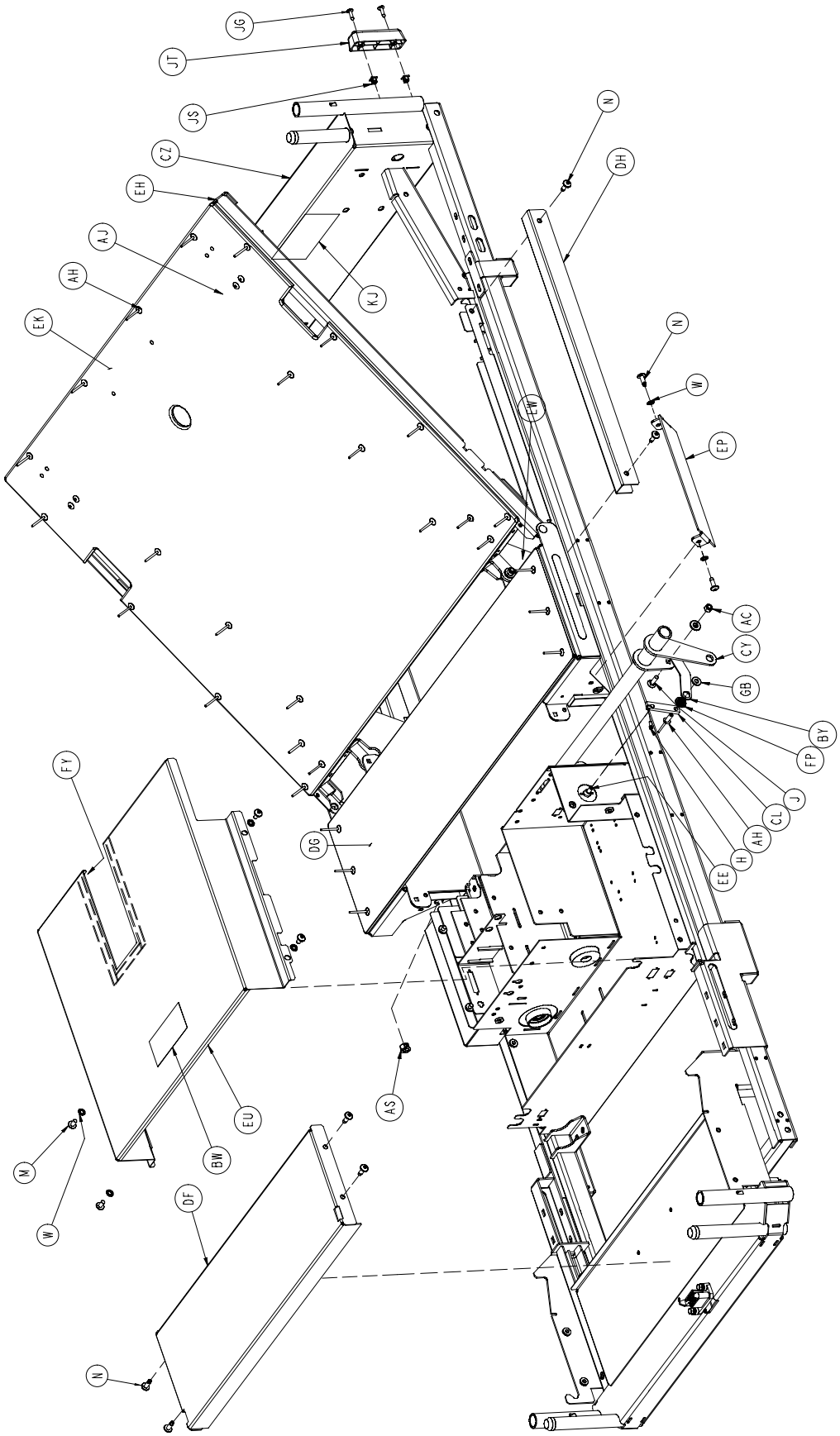

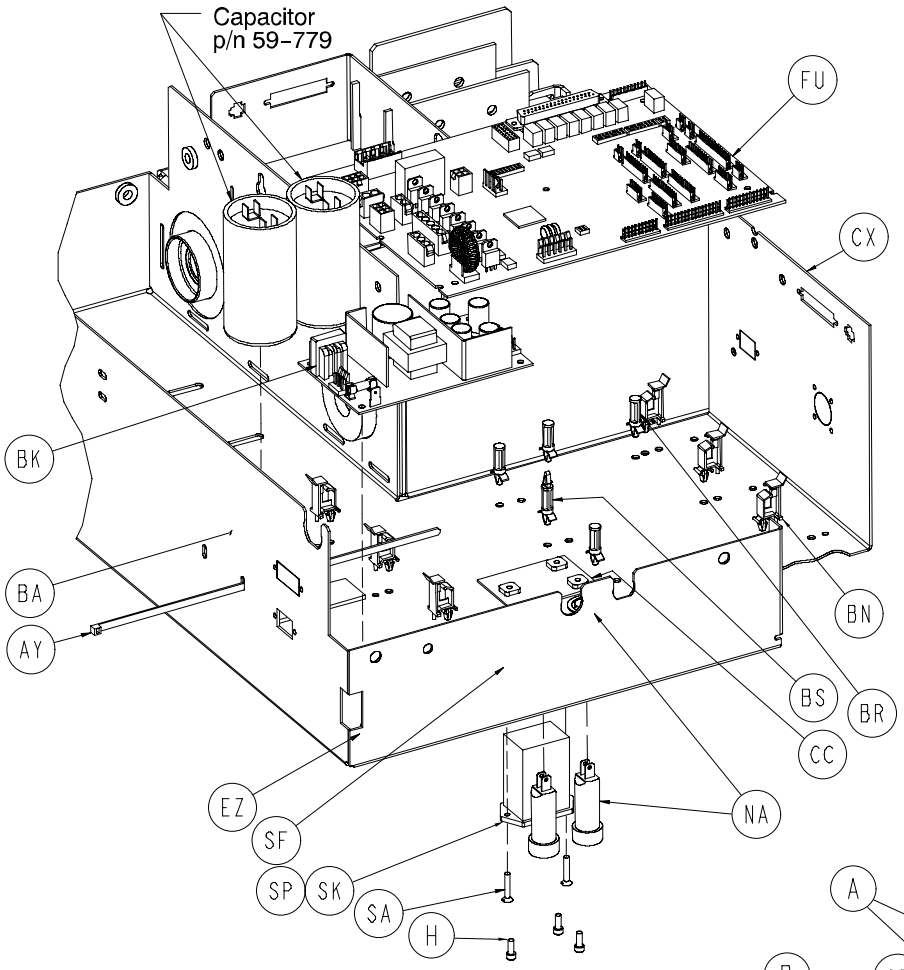
Capacitor
p/n 59-779
FU
CX
BK
BA
AY
BN
BS
BR
CC
EZ
SF
NA
SP
SK
SA
H

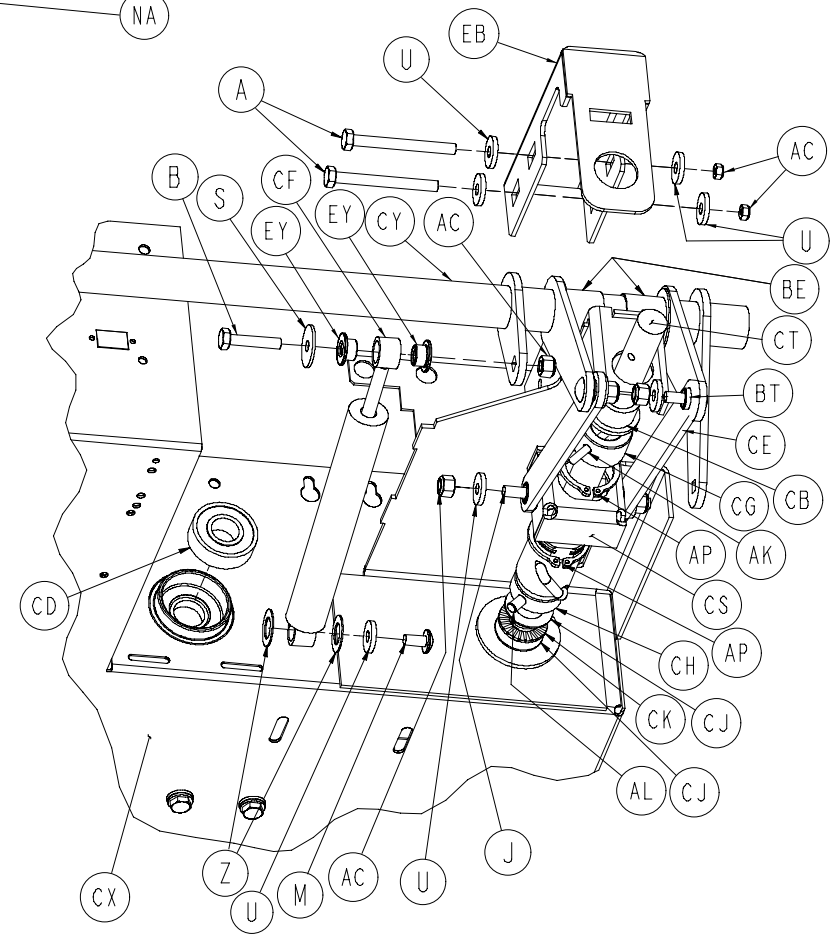
EB
U
A
AC
B
S
CF
EY
CY
AC
U
BE
CT
BT
CE
CG
CB
AP
AK
CS
AP
CH
CK
CJ
AL
CJ
CD
CX
Z
U
M
AC
U
J

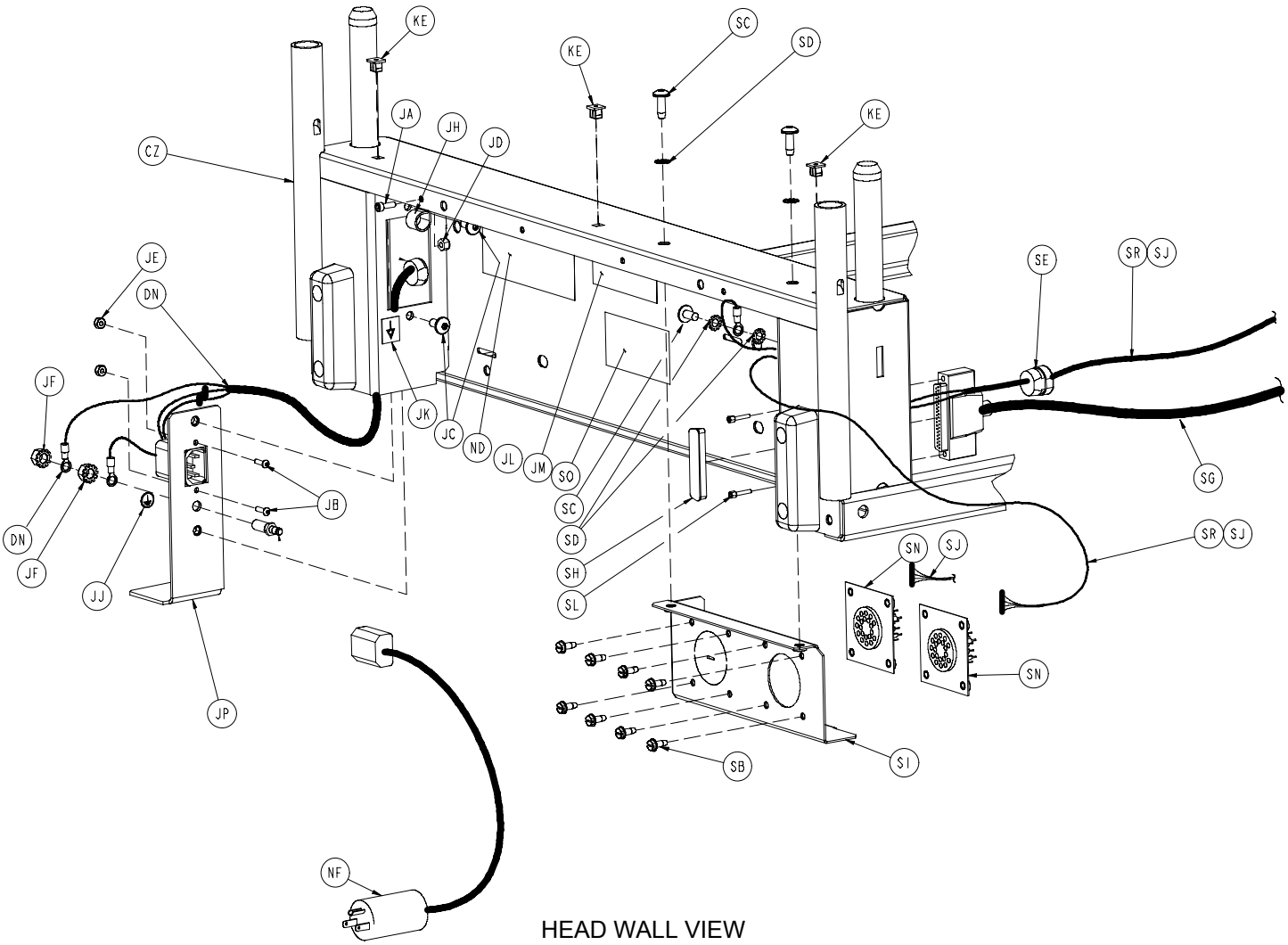

HEAD WALL VIEW

Litter Assembly and Options

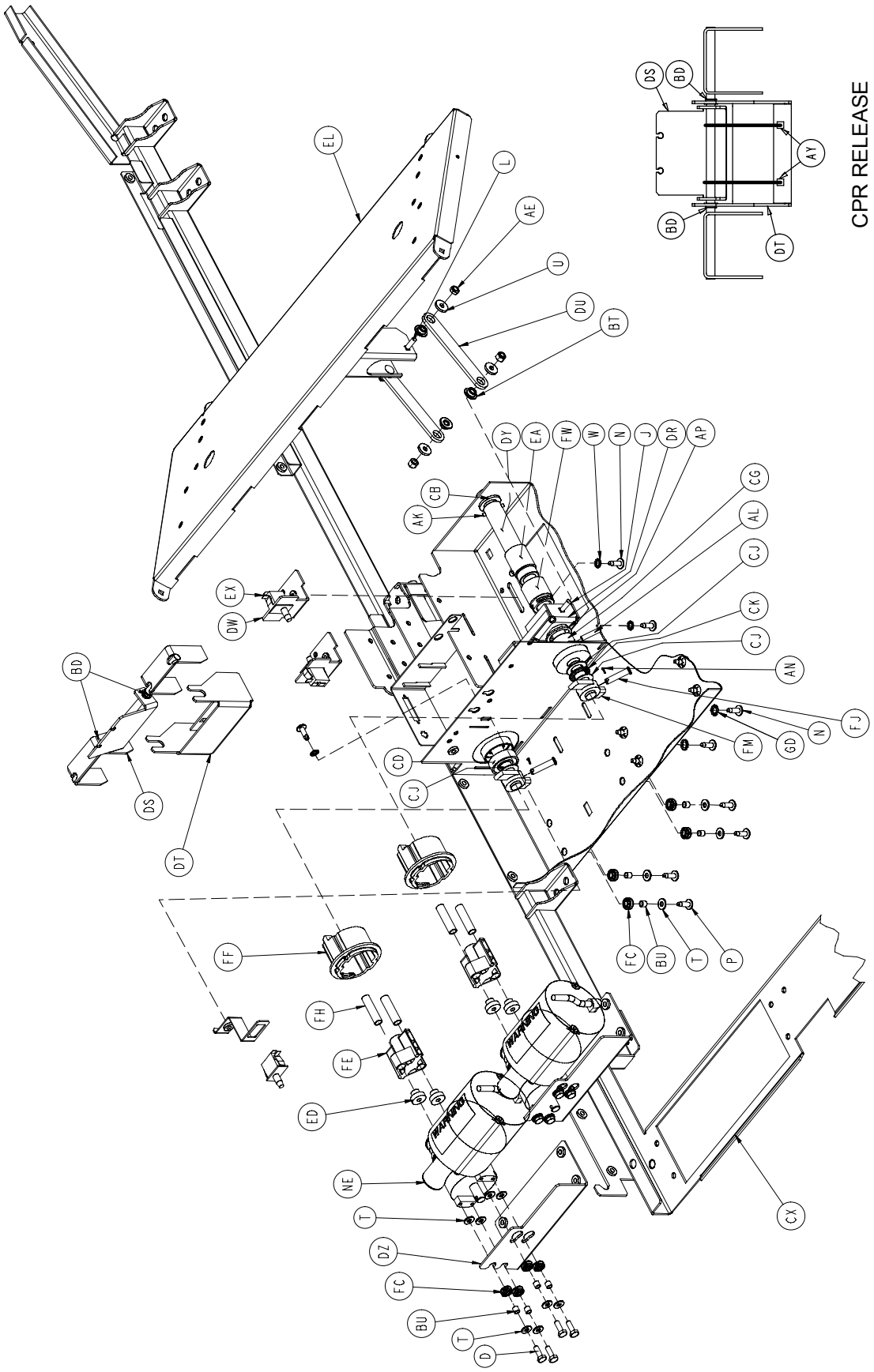

Litter Assembly and Options

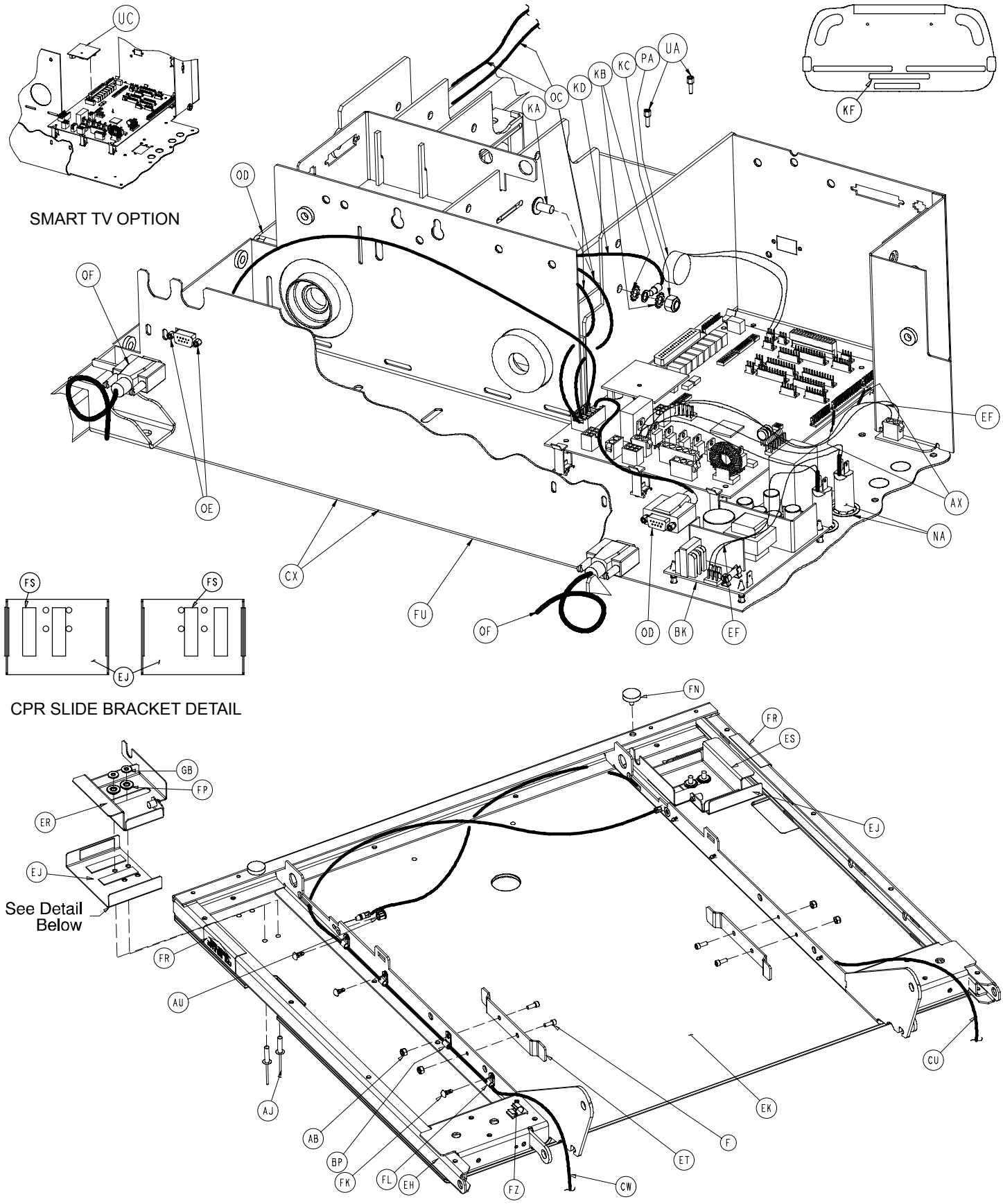

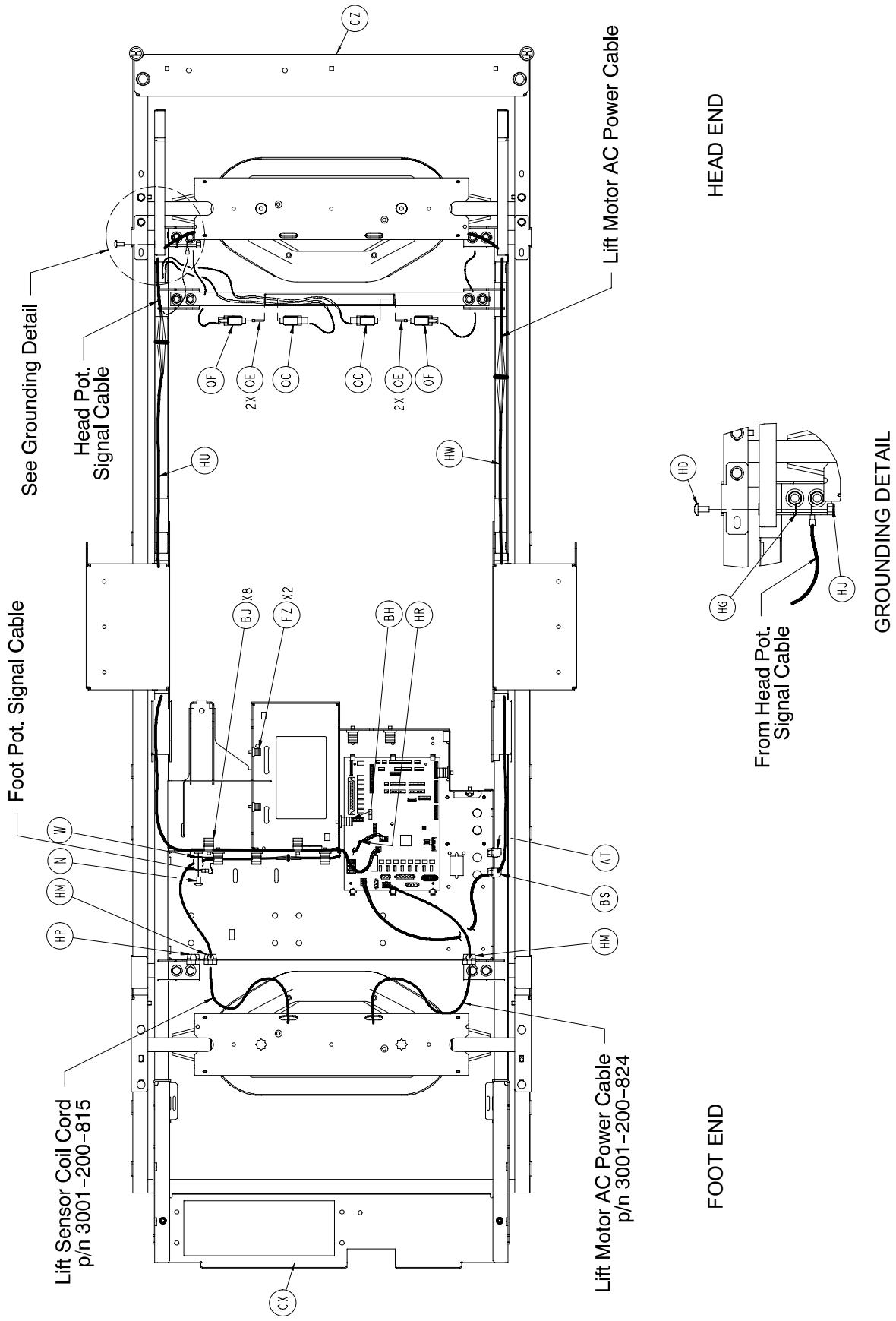
CZ
Lift Motor AC Power Cable
HEAD END
See Grounding Detail
Head Pot.
Signal Cable
OF
2X OE
OC
OC
2X OE
OF
HU
HW
HD
HG
HJ
GROUNDING DETAIL
From Head Pot.
Signal Cable
BJ X8
FZ X2
BH
HR
Foot Pot. Signal Cable
W
N
HM
HP
AT
BS
HM
Lift Sensor Coil Cord
p/n 3001-200-815
Lift Motor AC Power Cable
p/n 3001-200-824
FOOT END
CX

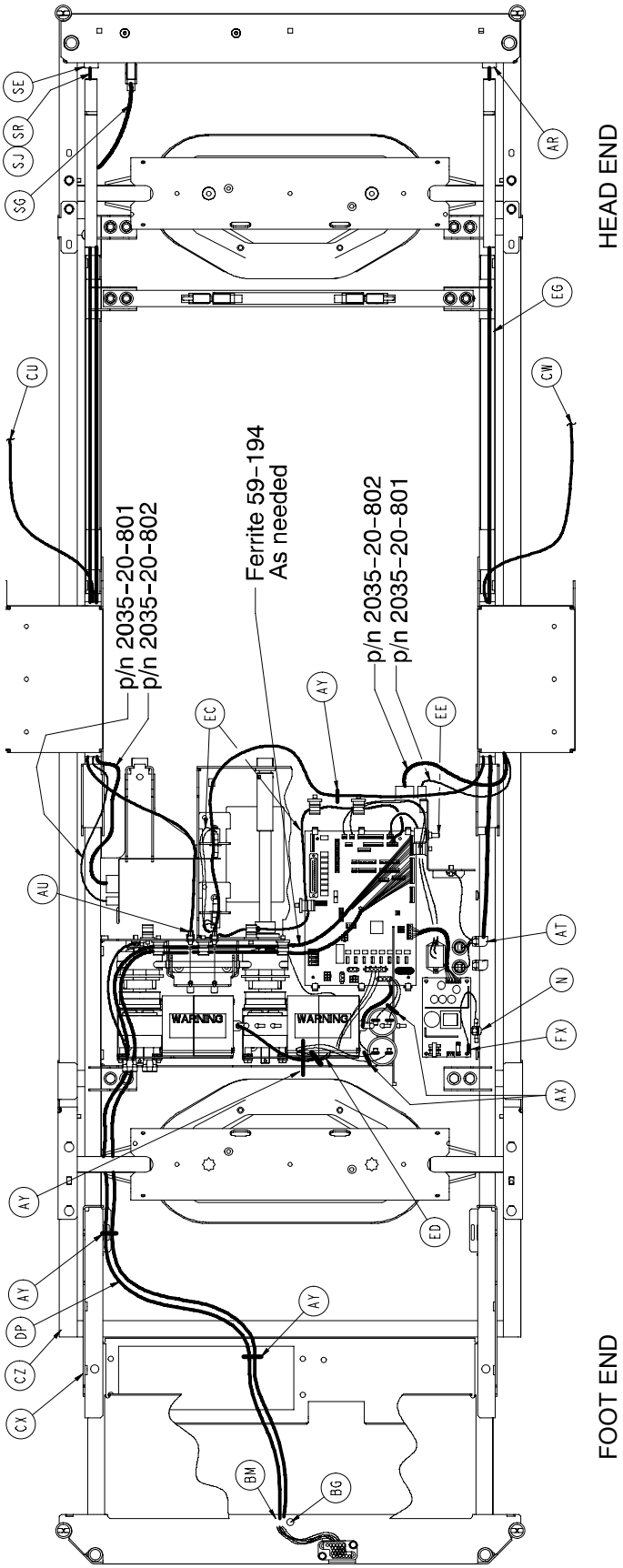

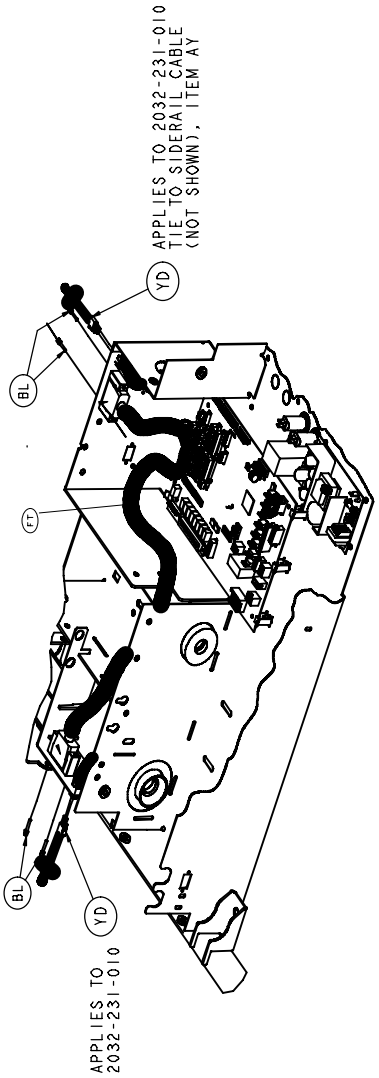

SIDERAIL EXTENSION CABLE ROUTING (only in US and Canada)

2032−231−10 Epic Domestic, Epic +, and Zoom Common Litter Components

Item	Part No.	Part Name	Qty.	Item	Part No.	Part Name	Qty.
A	0003−023−000	Hex Hd. Cap Screw	2	BW	0988−002−708	Shock Caution Label	1
B	0003−074−000	Hex Hd. Cap Screw	3	BY	2025−031−062	Pot. Actuator Link	1
C	0003−078−000	Hex Hd. Cap Screw	4	BZ	2025−031−880	Ground Jumper	4
D	0003−214−000	Hex Hd. Cap Screw	8	CA	3002−300−870	Ground Strap	8
E	0003−347−000	Hex Hd. Cap Screw	4	CB	2025−032−068	Flange Bearing	2
F	0004−032−000	Soc. Hd. Cap Screw	4	CD	2025−032−076	Ball Bearing	2
G	0004−085−000	Soc. Hd. Cap Screw	2	CE	2025−032−077	Fowler Actuator Link	2
H	0004−101−000	Soc. Hd. Cap Screw	1	CF	2025−032−082	Hydraulic Dampener	2
J	0005−019−000	Carriage Bolt	18	CG	2025−032−084	Fowler Screw Up Stop	1
K	0005−024−000	Carriage Bolt	4	CH	2025−032−085	Fowler Screw Down Stop	1
L	0005−023−000	Carriage Bolt	3	CJ	2025−032−086	Thrust Washer	5
M	0007−058−000	Truss Hd. Torx	5	CK	2025−032−087	Roller Cage Bearing	2
N	0007−063−000	Truss Hd. Torx	19	CL	2025−231−061	Pot. Timing Clamp	1
P	0007−065−000	Truss Hd. Torx	16	CM	2025−231−088	Fowler Link	1
S	0011−053−000	Washer	10	CN	2025−231−090	Torque Tube Pivot Brg.	2
T	0011−063−000	Washer	37	CP	2025−231−099	Bed Extender Rel. Lever	2
U	0011−158−000	Washer	24	CR	2025−231−112	Bed Extender Pin Lock	2
W	0013−010−000	Ext. Tooth Lock Washer	16	CS	2025−232−089	Fowler Nut Box	1
X	0013−018−000	Ext. Tooth Lock Washer	14	CT	2025−232−090	Fowler Ball Screw	1
Y	0013−032−000	Ext. Tooth Lock Washer	2	CU	2035−031−048	Short CPR Cable	1
Z	0014−007−000	Washer	2	CW	2035−031−049	Long CPR Cable	1
AB	0016−003−000	Nylock Nut	4	CX	2032−031−050	Scale Frame Weldment	1
AC	0016−028−000	Nylock Nut	22	CY	2035−031−051	Torque Tube Weldment	1
AD	0016−035−000	Nylock Nut	8	CZ	2035−031−054	Iso. Frame Weldment	1
AE	0016−102−000	Nylock Nut	8	DA	2035−031−055	Head End Crosstube	1
AF	0003−224−000	Hex Washer Hd. Screw	16	DB	2035−031−057	Bed Extender Weldment	1
AH	0025−142−000	Rivet	29	DC	2035−031−064	Torque Tube Ret. Brkt., Lt.	1
AJ	0025−147−000	Rivet	4	DD	2035−031−065	Torque Tube Ret. Brkt., Rt.	1
AK	0026−012−000	Roll Pin	2	DE	2035−031−066	Torque Block Channel	2
AL	0026−168−000	Spiral Pin	2	DF	2035−031−094	Foot Support Cover	1
AN	0027−017−000	Cotter Pin	2	DG	2032−031−097	Seat Section Skin	1
AP	0028−120−000	External Retaining Ring	3	DH	2035−031−100	Wire Channel Cover	2
AR	0030−027−000	Strain Relief	1	DJ	2035−031−115	Roller Bracket Cover, Rt.	1
AS	0030−036−000	Grommet	4	DK	2035−031−116	Roller Bracket Cover, Lt.	1
AT	0030−047−000	Right Angle Strain Relief	1	DL	2035−031−126	Protective Sleeve	2
AU	0030−052−000	Snap Bushing	4	DM	2035−031−127	Nylon Stop	2
AX	0038−111−000	Cable Tie	10	DN	2035−031−801	Inlet/Fuse Cable	1
AY	0038−151−000	Cable Tie	19	DP	2030−049−801	Footboard/CPU Cable	1
AZ	0038−382−000	Compression Spring	2	DR	2035−032−052	Gatch Trigger Weldment	1
BA	0044−029−000	Black Foam Tape	1	DS	2035−032−054	CPR Release Wldmt. Brkt.	1
BB	0044−032−000	1” Wide Poly Tape	50”	DT	2035−032−072	CPR Release Pivot Brkt.	1
BC	0052−104−000	Cable Clamp	2	DU	2035−032−077	Gatch Actuator Link	2
BD	0052−759−000	Flange Bearing	2	DW	2035−032−079	Act. Box Cherry Swch. Brkt.	2
BE	0052−762−000	Nyliner Bushing	2	DX	2035−032−084	Gatch Screw Up Stop	1
BF	0058−056−000	Black Edge Trim	18”	DY	2035−032−085	Gatch Screw Down Stop	1
BG	0058−076−000	Drive Fastener	2	DZ	2035−032−088	Act. Box Motor Mtg. Brkt.	2
BH	0059−133−000	Push−Mount Wire Clip	1	EA	2035−032−090	Gatch Ball Screw Ass’y	1
BJ	0059−135−000	Push−Mount Wire Clip	8	EB	2035−032−096	Ball Screw Cover	1
BK	0059−157−000	Power Supply	1	EC	2035−032−801	Gatch Limit Switch Cable	1
BL	0059−727−000	Jack Screw	4	ED	2035−032−802	Fowler/CPU Jumper Cable	1
BM	0059−743−000	Wire Harness Clip	2	EE	2035−032−803	Fowler Pot. Cable	1
BN	0059−751−000	Locking Circuit Bd. Supt.	6	EF	2035−032−804	Fuse/PCB Cable	1
BP	0059−767−000	Cable Clamp	2	EH	2032−033−050	Fowler Frame Weldment	1
BR	0059−773−000	Push Spacer	4	EJ	2035−033−062	CPR Release Slide Brkt.	2
BS	0059−774−000	Locking PCB Support	1	EK	2035−033−063	Fowler Skin	1
BT	0081−268−000	Flange Bearing	15	EM	2032−035−050	Foot Section Weldment	1
BU	0715−001−133	Rel. Valve Stop Sleeve	18	EL	2032−034−050	Thigh Section Weldment	1

2032−231−10 Epic Domestic, Epic +, and Zoom Common Litter Components (Conintued)

Item	Part No.	Part Name	Qty.	Item	Part No.	Part Name	Qty.
EP	2035−231−085	Seat Section Cover	2	FZ	8815−001−100	Wire Mount Clip	4
ER	2035−233−064	Quick Drop Rel. Brkt., Lt.	1	GA	0011−310−000	Washer	2
ES	2035−233−065	Quick Drop Rel. Brkt., Rt.	1	GB	0011−002−000	Washer	5
ET	2035−400−565	Siderail Guide Bracket	2	GC	0007−052−000	Truss Hd. Torx	4
EU	(page 119)	Actuator Box Cover Ass'y	1	GD	0013−038−000	Ext. Tooth Lock Washer	2
EW	2040−090−100	500 Lb. Label	2	GE	2025−231−089	Fowler Litter Link	1
EX	3000−300−058	Switch Plunger	2	GF	0059−194−000	Split Ferrite	1
EY	3000−300−099	Modified Bushing	9	HA	0003−347−000	Hex Hd. Cap Screw	8
EZ	3000−300−115	Standoff	4	HB	0004−338−000	Flanged But. Hd. Screw	4
FA	3000−300−349	Head/Foot Board Post Cap	4	HC	0005−029−000	Rd. Hd. Sq. Neck Bolt	4
FB	3000−300−353	Roller	4	HD	0007−058−000	Truss Hd. Torx	1
FC	3000−300−442	Fowler Drive Grommet	16	HE	0011−539−000	Washer	32
FD	3000−300−455	CPR Isolation Bushing	4	HF	0011−063−000	Washer	8
FE	3000−300−456	CPR Isolator	2	HG	0013−010−000	Ext. Tooth Lock Washer	1
FF	3000−300−461	CPR Decoupler	2	HH	0013−032−000	Ext. Tooth Lock Washer	4
FG	3000−300−462	CPR Wing	2	HJ	0016−006−000	Kep Nut	9
FH	3000−300−464	CPR Engagement Spring	4	HK	0016−035−000	Nylock Nut	8
FJ	3000−300−473	Clevis Pin	2	HL	0025−050−000	Rivet	24
FK	3000−300−477	CPR Conduit Stud	6	HM	0030−027−000	Strain Grommet	2
FL	3000−300−478	CPR Conduit Clamp	6	HN	0030−047−000	Right Angle Strain Relief	1
FM	3001−200−228	Mounting Standoff	2	HP	0059−106−000	Strain Relief	1
FM	3001−200−228	Mounting Standoff	2	HR	2030−031−801	Foot Pot. Exten. Cable	1
FN	3001−300−008	Thigh Bumper	2	HU	2030−031−802	Head Pot. Exten. Cable	1
FP	3001−300−099	Flange Bearing	10	HW	2030−031−803	Head Lift Motor Extension	1
FR	3001−300−603	CPR Release Label	2	HX	2040−031−056	Foley Bag Hanger	6
FS	3001−300−663	Velcro Strip	10	HY	3001−300−004	Spacer	8
FT	3001−300−877	Siderail Extension Cable	1	JD	0016−014−000	Nylock Nut	1
FW	5000−030−366	Fowler Nut Adapter	1	JH	0034−021−000	Cord Clamp	1
FX	5010−080−007	Power Supply Gd. Cable	1	JR	2035−031−880	Power Inlet Cable	1
FY	8800−380−000	Neoprene Sponge	1.5'	NG	3002−407−950	CPU	1
YA	3003−300−033	Mattress Retainer	4	YC	2035−032−805	Cable CPU/Power Supply	1
YD	2035−020−805	Siderail LS Bypass Cable	2				

2031−132−10 Epic International Common Litter Components

Item	Part No.	Part Name	Qty.
B	3−74	Hex Hd. Cap Screw	3
C	3−78	Hex Hd. Cap Screw	4
D	3−214	Hex Hd. Cap Screw	8
E	3−347	Hex Hd. Cap Screw	4
F	4−32	Soc. Hd. Cap Screw	4
G	4−85	Soc. Hd. Cap Screw	2
H	4−101	Soc. Hd. Cap Screw	1
J	5−19	Carriage Bolt	18
K	5−24	Carriage Bolt	4
L	5−23	Carriage Bolt	3
M	7−58	Truss Hd. Torx	5
N	7−63	Truss Hd. Torx	19
P	7−65	Truss Hd. Torx	16
R	11−4	Washer	16
S	11−53	Washer	10
T	11−63	Washer	37
U	11−158	Washer	24
W	13−10	Ext. Tooth Lock Washer	16
X	13−18	Ext. Tooth Lock Washer	14
Y	13−32	Ext. Tooth Lock Washer	2
Z	14−7	Washer	2
AB	16−3	Nylock Nut	4
AC	16−28	Nylock Nut	22
AD	16−35	Nylock Nut	8
AE	16−102	Nylock Nut	8
AF	3−224	Hex Washer Hd. Screw	16
AH	25−142	Rivet	29
AJ	25−147	Rivet	4
AK	26−12	Roll Pin	2
AL	26−168	Spiral Pin	2
AN	27−17	Cotter Pin	2
AP	28−120	External Retaining Ring	3
AR	30−27	Strain Relief	1
AS	30−36	Grommet	4
AT	30−47	Right Angle Strain Relief	1
AU	30−52	Snap Bushing	4
AX	38−111	Cable Tie	10
AY	38−151	Cable Tie	17
AZ	38−382	Compression Spring	2
BA	44−29	Black Foam Tape	1
BB	44−32	1” Wide Poly Tape	50”
BC	52−104	Cable Clamp	2
BD	52−759	Flange Bearing	2
BE	52−762	Nyliner Bushing	2
BF	58−56	Black Edge Trim	18”
BG	58−76	Drive Fastener	2
BH	59−133	Push−Mount Wire Clip	1
BJ	59−135	Push−Mount Wire Clip	8
BK	59−157	Power Supply	1
BL	59−727	Jack Screw	4
BM	59−743	Wire Harness Clip	2
BN	59−751	Locking Circuit Bd. Supt.	6
BP	59−767	Cable Clamp	2
BR	59−773	Push Spacer	4
BS	59−774	Locking PCB Support	1
BT	81−268	Flange Bearing	15
BU	715−1−133	Rel. Valve Stop Sleeve	18
BW	988−2−708	Shock Caution Label	1
BY	2025−31−62	Pot. Actuator Link	1
BZ	2025−31−880	Ground Jumper	4
CA	3002−300−870	Ground Strap	8
CB	2025−32−68	Flange Bearing	2
CD	2025−32−76	Ball Bearing	2
CE	2025−32−77	Fowler Actuator Link	2
CF	2025−32−82	Hydraulic Dampener	2
CG	2025−32−84	Fowler Screw Up Stop	1
CH	2025−32−85	Fowler Screw Down Stop	1
CJ	2025−32−86	Thrust Washer	5
CK	2025−32−87	Roller Cage Bearing	2
CL	2025−231−61	Pot. Timing Clamp	1
CM	2025−231−88	Fowler Link	1
CN	2025−231−90	Torque Tube Pivot Brg.	2
CP	2025−231−99	Bed Extender Rel. Lever	2
CR	2025−231−112	Bed Extender Pin Lock	2
CS	2025−232−89	Fowler Nut Box	1
CT	2025−232−90	Fowler Ball Screw	1
CU	2035−31−48	Short CPR Cable	1
CW	2035−31−49	Long CPR Cable	1
CX	2032−31−50	Scale Frame Weldment	1
CY	2035−31−51	Torque Tube Weldment	1
CZ	2035−31−54	Iso. Frame Weldment	1
DA	2035−31−55	Head End Crosstube	1
DB	2035−31−57	Bed Extender Weldment	1
DC	2035−31−64	Torque Tube Ret. Brkt., Lt.	1
DD	2035−31−65	Torque Tube Ret. Brkt., Rt.	1
DE	2035−31−66	Torque Block Channel	2
DF	2035−31−94	Foot Support Cover	1
DG	2032−31−97	Seat Section Skin	1
DH	2035−31−100	Wire Channel Cover	2
DJ	2035−31−115	Roller Bracket Cover, Rt.	1
DK	2035−31−116	Roller Bracket Cover, Lt.	1
DL	2035−31−126	Protective Sleeve	2
DM	2035−31−127	Nylon Stop	2
DN	2035−31−801	Inlet/Fuse Cable	1
DR	2035−32−52	Gatch Trigger Weldment	1
DS	2035−32−54	CPR Release Wldmt. Brkt.	1
DT	2035−32−72	CPR Release Pivot Brkt.	1
DU	2035−32−77	Gatch Actuator Link	2
DW	2035−32−79	Act. Box Cherry Swch. Brkt.	2
DX	2035−32−84	Gatch Screw Up Stop	1
DY	2035−32−85	Gatch Screw Down Stop	1
DZ	2035−32−88	Act. Box Motor Mtg. Brkt.	2
EA	2035−32−90	Gatch Ball Screw Ass’y	1
EB	2035−32−96	Ball Screw Cover	1
EC	2035−32−801	Gatch Limit Switch Cable	1
ED	2035−32−802	Fowler/CPU Jumper Cable	1
EE	2035−32−803	Fowler Pot. Cable	1
EF	2035−32−804	Fuse/PCB Cable	1
EH	2032−33−50	Fowler Frame Weldment	1
EJ	2035−33−62	CPR Release Slide Brkt.	2
EK	2035−33−63	Fowler Skin	1
EM	2032−35−50	Foot Section Weldment	1
EL	2032−34−50	Thigh Section Weldment	1

2031−132−10 Epic International Common Litter Components (Continued)

Item	Part No.	Part Name	Qty.	Item	Part No.	Part Name	Qty.
EP	2035−231−85	Seat Section Cover	2	FZ	8815−001−100	Wire Mount Clip	4
ER	2035−233−64	Quick Drop Rel. Brkt., Lt.	1	GA	11−310	Washer	2
ES	2035−233−65	Quick Drop Rel. Brkt., Rt.	1	GB	11−2	Washer	5
ET	2035−400−565	Siderail Guide Bracket	2	GC	7−52	Truss Hd. Torx	4
EU	(page 119)	Actuator Box Cover Ass'y	1	GD	13−38	Ext. Tooth Lock Washer	2
EW	2040−90−100	500 Lb. Label	2	GE	2025−231−89	Fowler Litter Link	1
EX	3000−300−58	Switch Plunger	2	GF	59−194	Split Ferrite	1
EY	3000−300−99	Modified Bushing	9	HA	3−347	Hex Hd. Cap Screw	8
EZ	3000−300−115	Standoff	4	HB	4−338	Flanged But. Hd. Screw	4
FA	3000−300−349	Head/Foot Board Post Cap	4	HC	5−29	Rd. Hd. Sq. Neck Bolt	4
FB	3000−300−353	Roller	4	HD	7−58	Truss Hd. Torx	1
FC	3000−300−442	Fowler Drive Grommet	16	HE	11−4	Washer	16
FD	3000−300−455	CPR Isolation Bushing	4	HF	11−63	Washer	8
FE	3000−300−456	CPR Isolator	2	HG	13−10	Ext. Tooth Lock Washer	1
FF	3000−300−461	CPR Decoupler	2	HH	13−32	Ext. Tooth Lock Washer	4
FG	3000−300−462	CPR Wing	2	HJ	16−6	Kep Nut	9
FH	3000−300−464	CPR Engagement Spring	4	HK	16−35	Nylock Nut	8
FJ	3000−300−473	Clevis Pin	2	HL	25−50	Rivet	24
FK	3000−300−477	CPR Conduit Stud	6	HM	30−27	Strain Grommet	2
FL	3000−300−478	CPR Conduit Clamp	6	HN	30−47	Right Angle Strain Relief	1
FM	3001−200−228	Mounting Standoff	2	HP	59−106	Strain Relief	1
FM	3001−200−228	Mounting Standoff	2	HR	2030−31−801	Foot Pot. Exten. Cable	1
FN	3001−300−8	Thigh Bumper	2	HU	2030−31−802	Head Pot. Exten. Cable	1
FP	3001−300−99	Flange Bearing	10	HW	2030−31−803	Head Lift Motor Extension	1
FR	3001−300−603	CPR Release Label	2	HX	2040−31−56	Foley Bag Hanger	6
FS	3001−300−663	Velcro Strip	10	HY	3001−300−4	Spacer	8
FT	3001−300−877	Siderail Extension Cable	1	JD	16−14	Nylock Nut	1
FW	5000−30−366	Fowler Nut Adapter	1	JH	34−21	Cord Clamp	1
FX	5010−80−7	Power Supply Gd. Cable	1	JR	2035−31−880	Power Inlet Cable	1
FY	8800−380−000	Neoprene Sponge	1.5'	NG	3002−407−950	CPU	1
	YC	2035−32−805	Cable CPU/Power Supply			1	

2040−32−20 Zoom/Epic/Epic+ Std. Height Option

Item	Part No.	Part Name	Qty.
HS	2030−331−52	Head End Header Wldmt.	1
HT	2030−331−53	Foot End Header Wldmt.	1

2040−32−21 Zoom/Epic/Epic+ Enh. Height Option

Item	Part No.	Part Name	Qty.
HS	2040−31−252	Head End Header Wldmt.	1
HT	2040−31−253	Foot End Header Wldmt.	1

Litter Assembly and Options

2040−132−11 Epic+/Zoom® Litter Components

Item	Part No.	Part Name	Qty.
KA	7−58	Truss Hd. Torx	1
KB	13−10	Ext. Tooth Lock Washer	2
KC	16−28	Nylock Nut	1
KD	2040−231−807	Bed CPU Cable	1
KE	3000−300−2	Plastic Clip Nut	3
KF	2040−31−100	Manual Push Label	1
KG	59−194	Split Ferrite	3
KH	59−738	Hole Plug	2

2030−32−15 Epic Litter Domestic Components

Item	Part No.	Part Name	Qty.
NA	59−159	Circuit Breaker	2
ND	2030−231−125	Specification Label	1
NE	2035−300−705	Fowler Drive Assembly	2
NF	39−254	Power Cord	1

2031−32−15 Epic Litter International Components

Item	Part No.	Part Name	Qty.
NA	59−178	Circuit Breaker	2
NC	3221−300−453	Capacitor	2
ND	2031−231−125	Specification Label	1
NE	3221−300−705	Fowler Drive Assembly	2

2031−32−16 Litter European Comp. − No Scale

Item	Part No.	Part Name	Qty.
NA	59−178	Circuit Breaker	2
NC	3221−300−453	Capacitor	2
ND	2031−231−126	Specification Label	1
NE	3221−300−705	Fowler Drive Assembly	2

2031−32−17 Litter European Comp. − Scale

Item	Part No.	Part Name	Qty.
NA	59−178	Circuit Breaker	2
NC	3221−300−453	Capacitor	2
ND	2031−231−127	Specification Label	1
NE	3221−300−705	Fowler Drive Assembly	2

2030−232−15 Epic+ Litter Domestic Components

Item	Part No.	Part Name	Qty.
NA	59−179	Circuit Breaker	2
ND	2030−231−125	Specification Label	1
NE	2035−300−705	Fowler Drive Assembly	2

2035−130−207 Smart TV Option

Item	Part No.	Part Name	Qty.
UA	59−727	Jack Screw	2
UC	3001−330−970	STV Board	1

2030−34−10 Foot Prop Option

Item	Part No.	Part Name	Qty.
R	11−4	Washer	4
AA	14−8	Washer	4
AM	27−15	Cotter Pin	4
EN	2035−35−96	Foot Prop Rod	1
BF	58−56	Black Edge Trim	6”

2031−200−000 Japan Option (not shown)

Item	Part No.	Part Name	Qty.
	2031−200−2	Power Inlet Cable	1
	59−208	Circuit Breaker	2
	59−140	Capacitor	2
	2031−200−1	Specification Label	1
	2035−300−705	Fowler Drive Assembly	2
	39−254	Power Cord	1
	59−207	Capacitor	2

2030−30−100 No Scale or Bed Exit Options

Item	Part No.	Part Name	Qty.
	(page 163)	Foot Board, No Scale/BE	1
OF	3001−300−511	“Imitation” Load Cell	4
GG	3000−300−353	Roller	4

2030−140−125 Scale Option Only

Item	Part No.	Part Name	Qty.
OA	13−32	Ext. Tooth Lock Washer	4
	(page 164)	Foot Board, Scale Option	1
OC	2035−317−805	Load Cell Cable, Head	2
OD	2035−317−804	Load Cell Cable, Foot	2
OE	3001−300−7	M/F Screw	8
OF	3002−307−57	Load Cell	4
GG	3002−300−353	Roller	4

2030−140−175 Bed Exit Option

Item	Part No.	Part Name	Qty.
OA	13−32	Ext. Tooth Lock Washer	4
	page 165)	Ft. Bd., Chaperone Option	1
OC	2035−317−805	Load Cell Cable, Head	2
OD	2035−317−804	Load Cell Cable, Foot	2
OE	3001−300−7	M/F Screw	8
OF	3002−307−57	Load Cell	4
GG	3002−300−353	Roller	4

2030−140−150 Scale & Bed Exit Options

Item	Part No.	Part Name	Qty.
OA	13−32	Ext. Tooth Lock Washer	4
	(page 167)	Ft. Bd., Scale & Chap.	1
OC	2035−317−805	Load Cell Cable, Head	2
OD	2035−317−804	Load Cell Cable, Foot	2
OE	3001−300−7	M/F Screw	8
OF	3002−307−57	Load Cell	4
GG	3002−300−353	Roller	4

2030−40−275 Zone Bed Exit Option

Item	Part No.	Part Name	Qty.
OA	13−32	Ext. Tooth Lock Washer	4
	(page 166)	Ft. Bd., Chap. II Option	1
OC	2035−317−805	Load Cell Cable, Head	2
OD	2035−317−804	Load Cell Cable, Foot	2
OE	3001−300−7	M/F Screw	8
OF	3002−307−57	Load Cell	4
GG	3002−300−353	Roller	4

2035−40−250 Scale & Zone Bed Exit Options

Item	Part No.	Part Name	Qty.
OA	13−32	Ext. Tooth Lock Washer	4
	(page 161)	Foot Board, Scale & BE	1
OC	2035−317−805	Load Cell Cable, Head	2
OD	2035−317−804	Load Cell Cable, Foot	2
OE	3001−300−7	M/F Screw	8
OF	3002−307−57	Load Cell	4
GG	3002−300−353	Roller	4

2030−30−251 High−Sounding Beeper Option

Item	Part No.	Part Name	Qty.
PA	3001−508−870	High−Sound Beeper Cable	1

Litter Assembly and Options

2035−30−200 Epic Head Wall Communication

Item	Part No.	Part Name	Qty.
SG	2035−31−806	Head Wall Interface Cable	1
SH	59−710	Static Cap	1
SL	3001−300−7	M/F Screw	2

2035−30−201 Epic Head Wall Comm. w/N. Call

Item	Part No.	Part Name	Qty.
SA	1−87	Flat Hd. Mach. Screw	2
SF	52−783	U Clip	2
SG	2035−31−806	Head Wall Interface Cable	1
SH	59−710	Static Cap	1
SL	3001−300−7	M/F Screw	2
SP	5010−80−20	9V Battery Box w/Cable	1

2035−30−202 Epic HW w/NC & 1 Stryker Port

Item	Part No.	Part Name	Qty.
SA	1−87	Flat Hd. Mach. Screw	2
SB	3−224	Hex Wash. Hd. Screw	4
SC	7−58	Truss Hd. Torx	3
SD	13−10	Ext. Tooth Lock Washer	4
SE	30−39	Strain Relief Grommet	1
SF	52−783	U Clip	2
SG	2035−31−806	Head Wall Interface Cable	1
SH	59−710	Static Cap	1
SI	2035−30−99	Pend. Port Head Wall Brkt.	1
SJ	2035−30−804	Pendant Port Cable	1
SL	3001−300−7	M/F Screw	2
SN	3001−314−920	Head Wall Pend. Port PCB	1
SO	5000−90−28	Cord Out Label	1
SP	5010−80−20	9V Battery Box w/Cable	1

2035−30−203 Epic HW w/NC & 2 Stryker Ports

Item	Part No.	Part Name	Qty.
SA	1−87	Flat Hd. Mach. Screw	2
SB	3−224	Hex Wash. Hd. Screw	8
SC	7−58	Truss Hd. Torx	3
SD	13−10	Ext. Tooth Lock Washer	4
SE	30−27	Strain Relief Grommet	1
SF	52−783	U Clip	2
SG	59−175	Head Wall Interface Cable	1
SH	59−710	Static Cap	1
SI	2035−30−99	Pend. Port Head Wall Brkt.	1
SJ	2035−30−805	Pend. Port Cable, 2 Ports	1
SL	3001−300−7	M/F Screw	2
SN	3001−314−920	Head Wall Pend. Port PCB	2
SO	5000−90−28	Cord Out Label	1
SP	5010−80−20	9V Battery Box w/Cable	1

2030−30−200 Epic+ Head Wall Communication

Item	Part No.	Part Name	Qty.
SG	2035−31−806	Head Wall Interface Cable	1
SH	59−710	Static Cap	1
	2030−31−200	Head Wall w/Comm.	1

2030−30−201 Epic+ Head Wall Comm. w/N. Call

Item	Part No.	Part Name	Qty.
SA	1−87	Flat Hd. Mach. Screw	2
SF	52−783	U Clip	2
SG	2035−31−806	Head Wall Interface Cable	1
SH	59−710	Static Cap	1
	2030−31−201	Hd. Wall Comm. w/NC	2
SP	5010−80−20	9V Battery Box w/Cable	1

2030−30−202 Epic+ HW w/NC & 1 Stryker Port

Item	Part No.	Part Name	Qty.
SA	1−87	Flat Hd. Mach. Screw	2
SE	30−45	Strain Relief Grommet	1
SF	52−783	U Clip	2
SG	2035−31−806	Head Wall Interface Cable	1
SH	59−710	Static Cap	1
	2030−31−202	Hd. Wall w/NC & 1 Port	1
SP	5010−80−20	9V Battery Box w/Cable	1
SR	2035−30−804	Pendant Port Cable	1

2030−30−203 Epic+ HW w/NC & 2 Stryker Ports

Item	Part No.	Part Name	Qty.
SA	1−87	Flat Hd. Mach. Screw	2
SE	30−27	Strain Relief Grommet	1
SF	52−783	U Clip	2
SG	59−175	Head Wall Interface Cable	1
SH	59−710	Static Cap	1
SJ	2035−30−805	Pend. Port Cable, 2 Ports	1
	2030−31−203	Hd. Wall w/NC & 2 Ports	1
SP	5010−80−20	9V Battery Box w/Cable	1

Actuator Box Cover Assembly

Assembly part number 2035−432−75 (reference only)

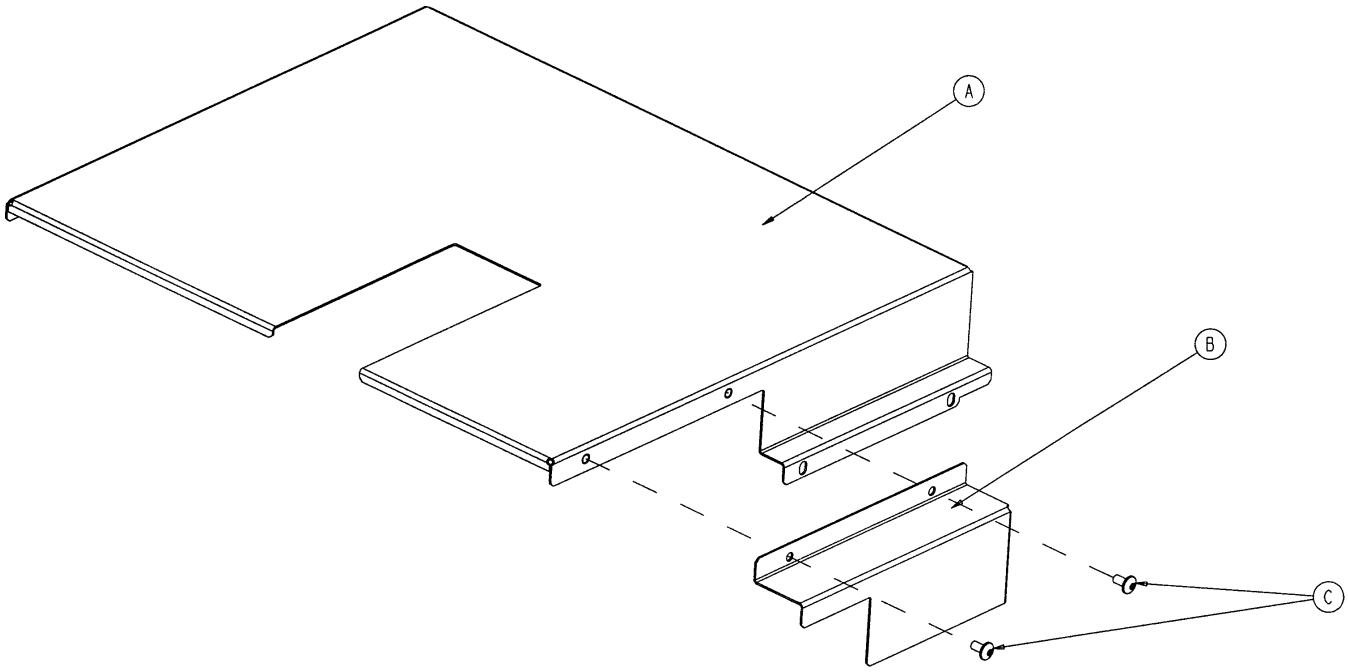

Item	Part No.	Part Name	Qty.
A	2035−332−75	Main Actuator Box Cover	1
B	2035−332−76	Actuator Box Side Cover	1
C	7−58	Truss Hd. Torx	2

3001−300−775 Fowler Brake Kit Assembly

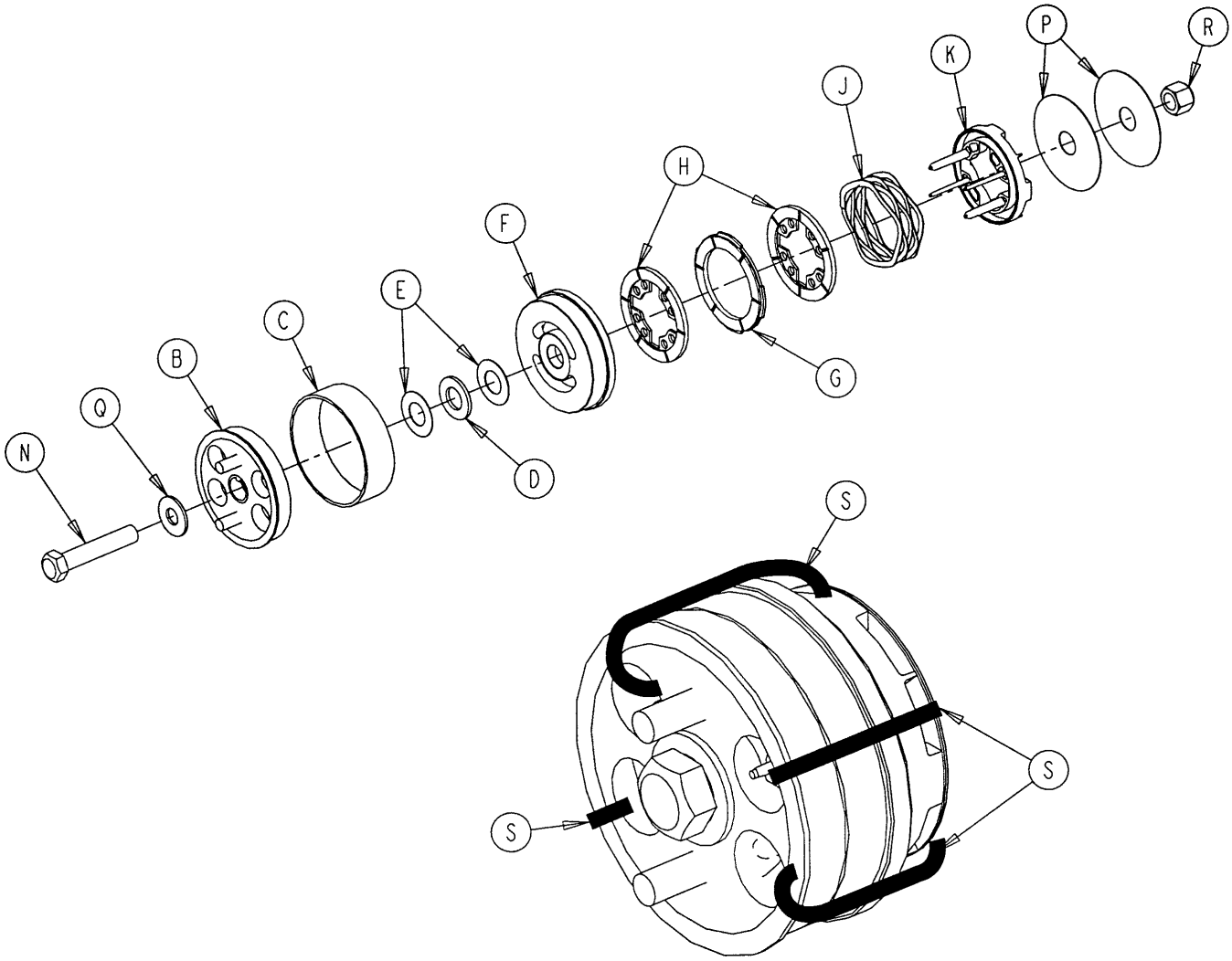

Item	Part No.	Part Name	Qty.
B	3001−300−455	CPR Coupler Assembly	1
C	3000−300−465	CPR Clutch Spring	1
D	81−212	Thrust Needle Roller Brg.	1
E	3000−200−224	Idler Gear Thrust Washer	2
F	3001−300−569	Brake Cup	1
G	3001−300−552	CPR Brake Disc	1
H	3001−300−551	CPR Spring Cup	2
J	3001−300−563	CPR Brake Spring	1
K	3001−300−570	CPR Spring Cup	1
N	3−64	Hex Hd. Cap Screw	1
P	3000−200−245	Flat Washer	2
Q	11−193	Heavy Flat Washer	1
R	16−12	Nylock Nut	1
S	3000−300−113	8” Wire Tie	4

Epic+ Litter Option Assembly

Assembly part number 2030−31−210
(reference only)

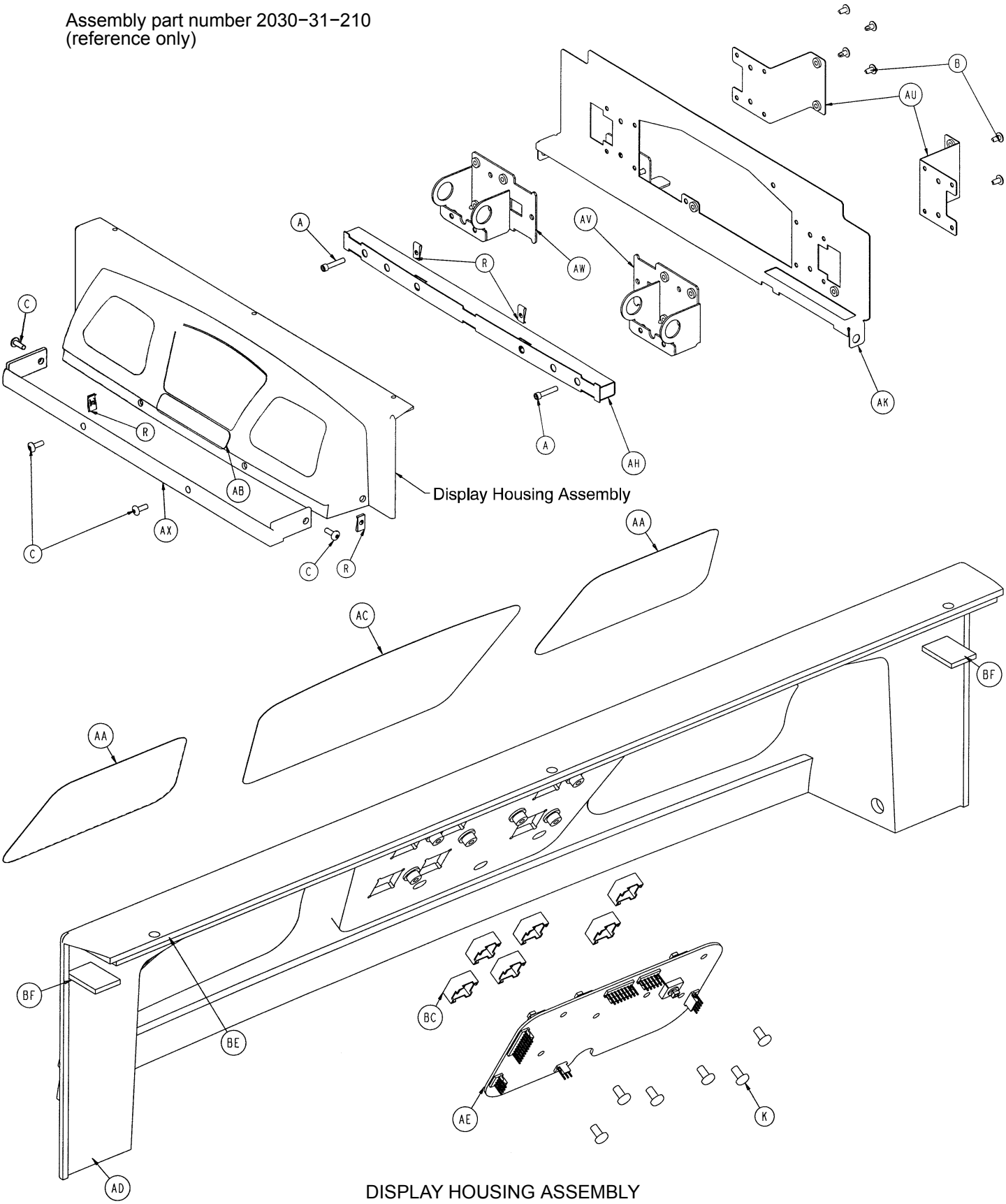

DISPLAY HOUSING ASSEMBLY

Epic+ Litter Option Assembly

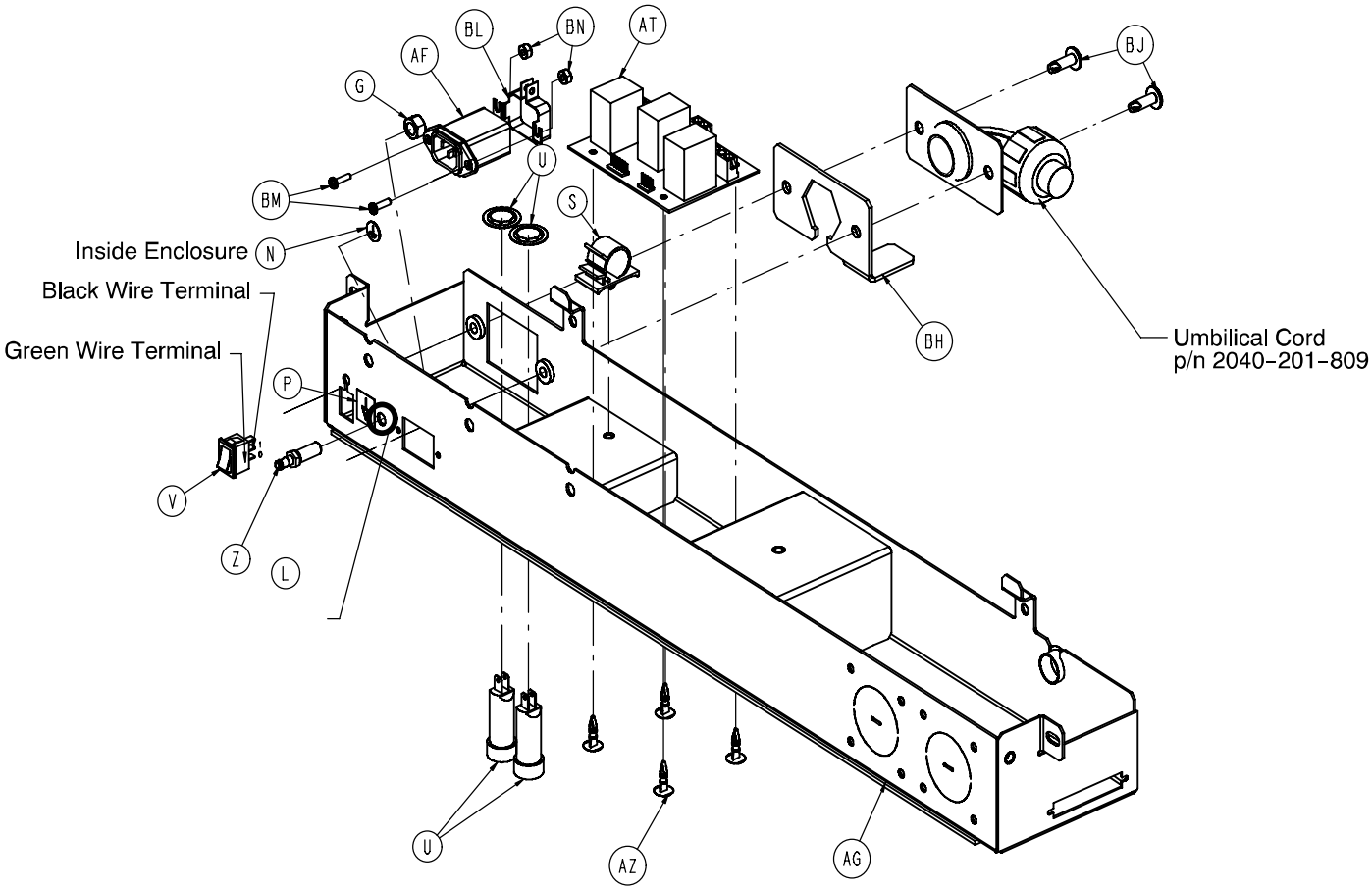

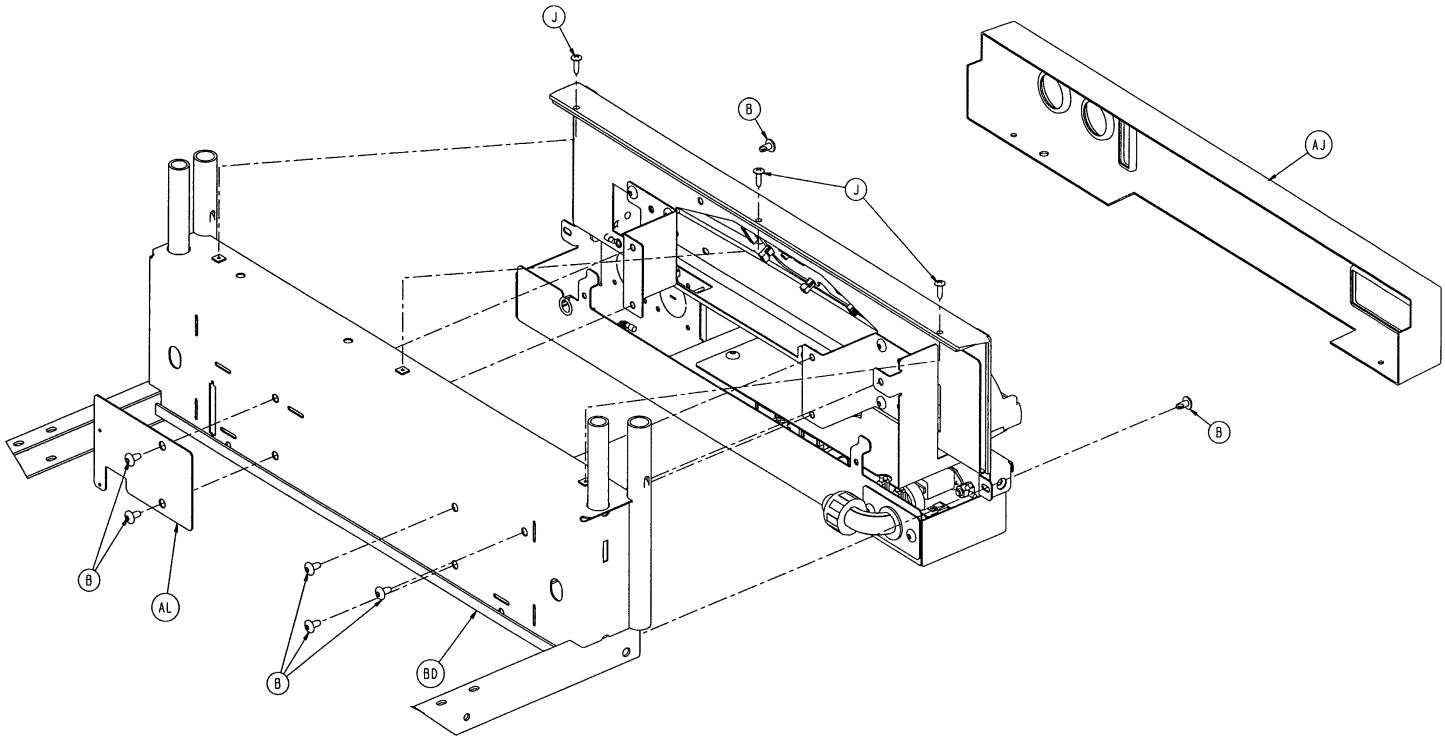

Epic+ Litter Option Assembly

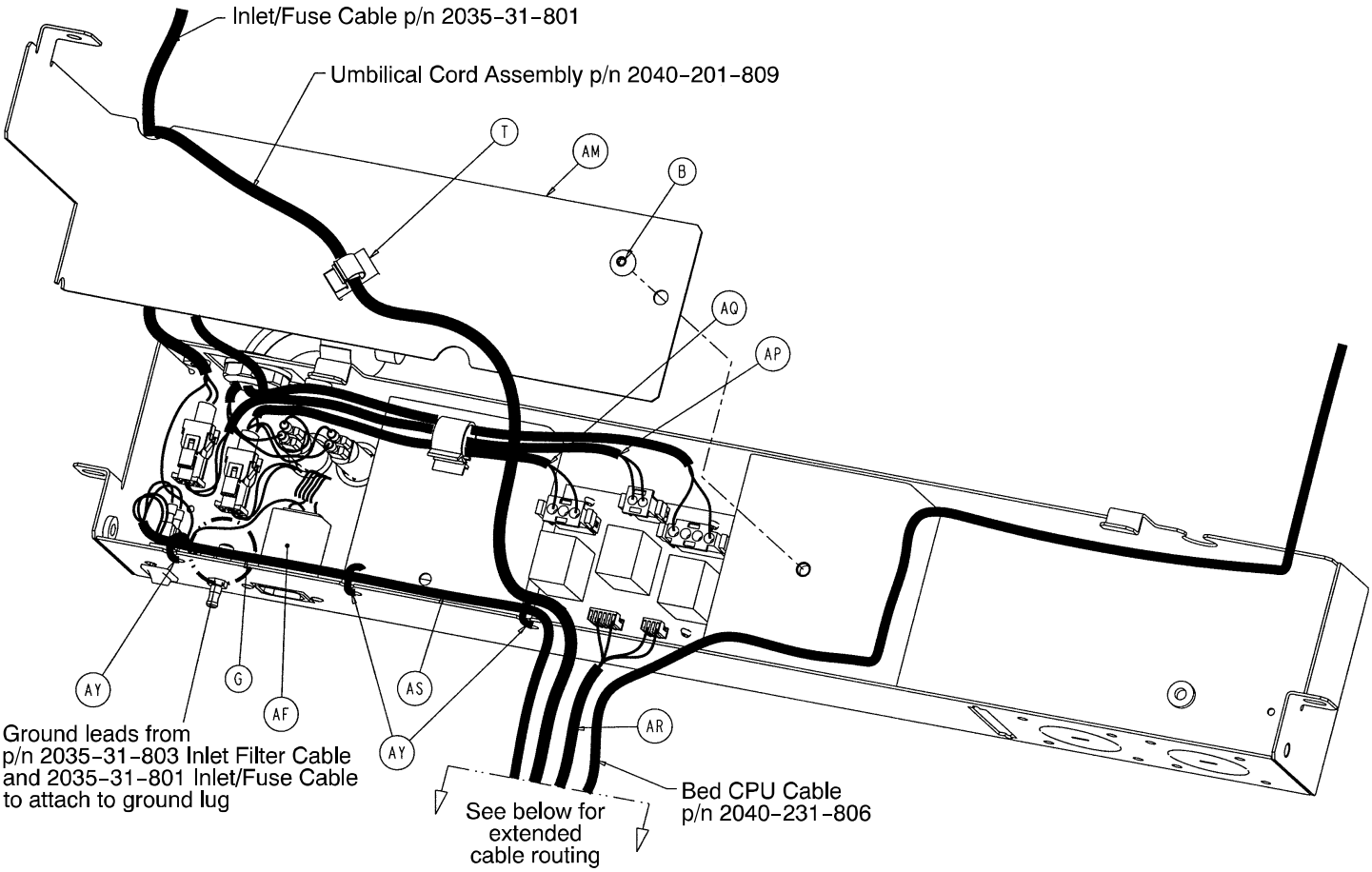

Epic+ Litter Option Assembly

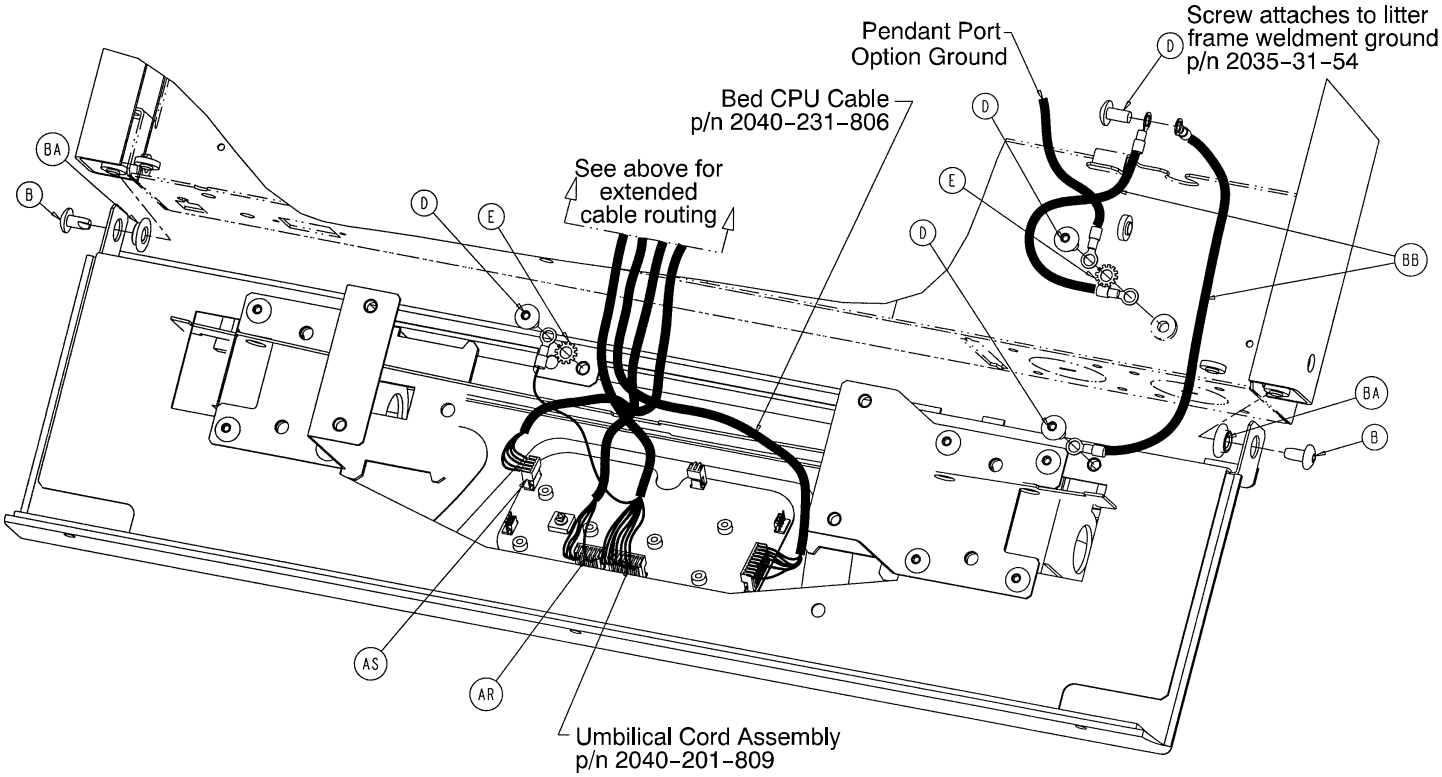

Epic+ Litter Option Assembly

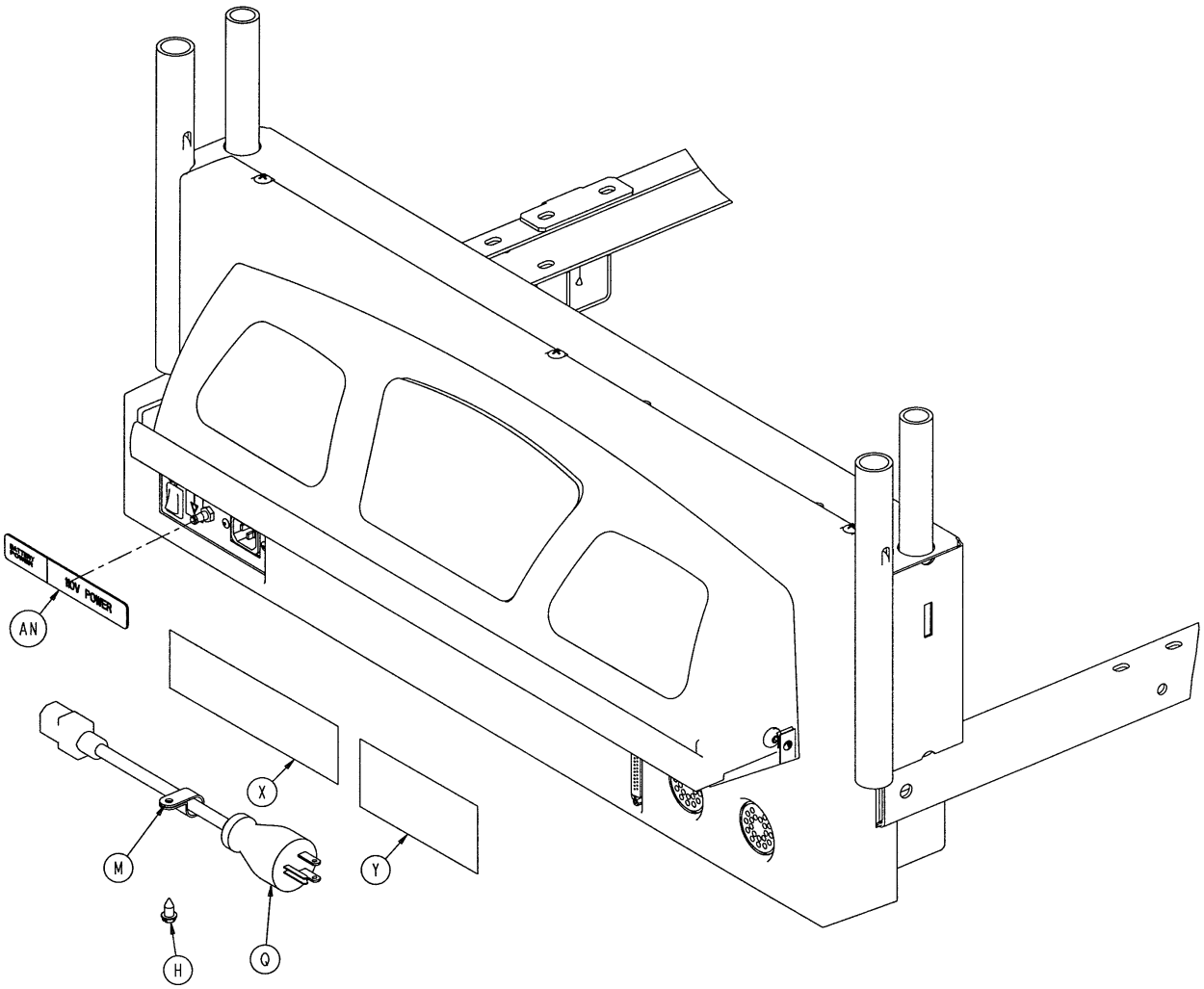

Item	Part No.	Part Name	Qty.
A	4−142	Soc. Hd. Cap Screw	2
B	7−52	Truss Hd. Torx	18
C	7−56	Truss Hd. Torx	4
D	7−58	Truss Hd. Torx	4
E	13−10	External Tooth Lock Washer	5
G	16−33	Kep Nut	2
H	23−25	Hex Washer Hd. Screw	1
J	23−80	Truss Hd. Screw	3
K	23−112	Pan Hd. Screw	6
M	34−22	Cord Clamp	1
N	36−46	Ground Label	1
P	36−115	Ground Label	1
Q	39−254	Power Cord	1
R	55−27	“U” Type Nut	4
S	59−133	Push−Mount Wire Clip	1
T	59−136	Push−Mount Wire Clip	1
U	59−195	3.0A Circuit Breaker	2

Epic+ Litter Option Assembly

Item	Part No.	Part Name	Qty.
V	59−191	On/Off Switch	1
X	1550−90−1	Hospital Plug Label	1
Y	2011−1−104	Anesthetics Danger Label	1
AA	2030−31−7	Epic+ Logo Label	2
AB	2030−31−9	Instruction Label	1
AC	2030−31−10	Epic+ Head End Label	1
AD	2030−31−208	Top Display Housing	1
AE	2030−31−910	Display/CPU Board	1
AG	2040−31−53	Bottom Head End Enclosure	1
AH	2040−31−54	Bumper Attachment Weldment	1
AK	2040−31−63	Top Head End Enclosure	1
AL	2040−31−77	Cover Plate	1
AM	2040−31−92	Head End Electronics Cover	1
AN	2040−31−103	Power Label	1
AP	2040−31−807	Bed AC Power Jumper Cable	1
AQ	2040−31−808	Charger AC Jumper Cable	1
AR	2040−31−809	CPU/Crossover PCB Jumper Cable	1
AS	2040−31−810	On/Off Cable	1
AT	2040−31−900	AC Switchover PCB	1
AU	2040−231−75	Head End Reinforcement Bracket	2
AV	2040−31−110	Pivot Bracket, Right	1
AW	2040−31−111	Pivot Bracket, Left	1
AX	2040−231−69	Display Bumper	1
AY	3000−300−114	4” Wire Tie	3
AZ	3000−300−115	Standoff	4
BA	3001−300−99	Pivot Bearing	2
BB	3001−300−870	8” Ground Strap	2
BC	3001−400−953	Switch Cap	6
BD	7000−1−326	Foam Tape (26.75”)	1
BE	8800−380−000	Foam Tape (26.25”)	1
BF	8800−380−000	Foam Tape (1.25”)	2
BH	2040−31−85	Umbilical Cord Support Plate	1
BJ	7−65	Truss Hd. Torx	2
BK	2035−31−806	Headwall Interface Cable	1
BL	0059−205−000	Connector Lock	1
BM	0050−032−000	Pan Head Screw	2
BN	0016−023−000	Nylock Hex Nut	2

Epic+ Litter Option Assembly

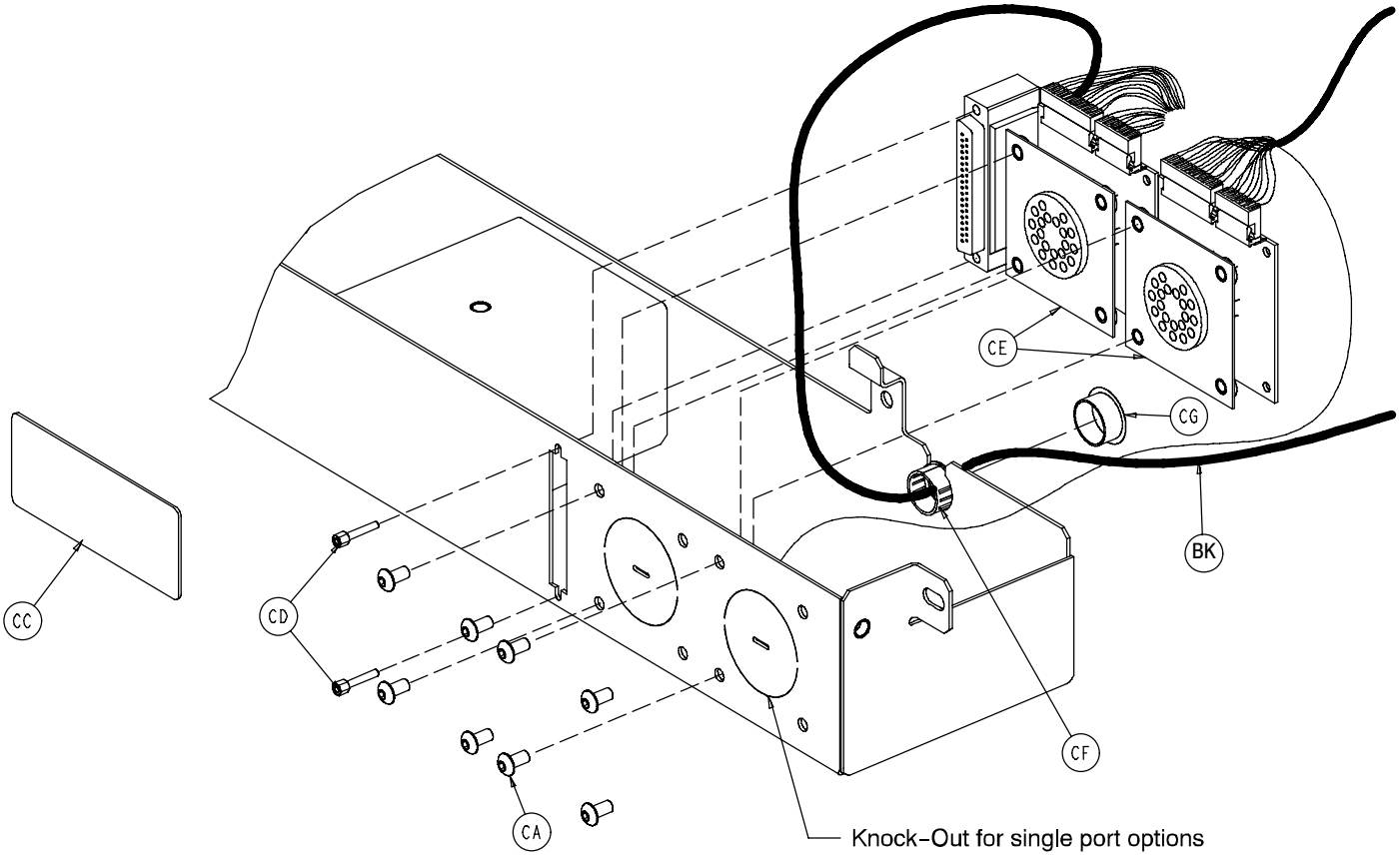

2030−31−200 Head Wall Communication Option

Item	Part No.	Part Name	Qty.
CD	3001−300−7	M/F Screw	2
CF	30−38	Grommet	1

2030−31−201 Head Wall Comm. w/Nurse Call

Item	Part No.	Part Name	Qty.
CD	3001−300−7	M/F Screw	2
CF	30−38	Grommet	1

2030−31−202 HW Comm. w/NC & 1 Stryker Port

Item	Part No.	Part Name	Qty.
CA	4−307	But. Hd. Cap Screw	4
CB	13−10	Ext. Tooth Lock Washer	2
CC	2040−31−104	Cord Out Label	1
CD	3001−300−7	M/F Screw	2
CE	3001−314−920	Head Wall Pend. Port PCB	1
CF	30−38	Grommet	1

2030−31−203 HW Comm. w/NC & 2 Stryker Ports

Item	Part No.	Part Name	Qty.
CA	4−307	But. Hd. Cap Screw	8
CB	13−10	Ext. Tooth Lock Washer	2
CC	2040−31−104	Cord Out Label	1
CD	3001−300−7	M/F Screw	2
CE	3001−314−920	Head Wall Pend. Port PCB	2
CF	30−38	Grommet	1

2030−31−204 No Head Wall Options

Item	Part No.	Part Name	Qty.
CG	37−30	Hole Plug	1

Optional Epic II 110V Outlet Assembly

Assembly part number 2030−320−60
(reference only)

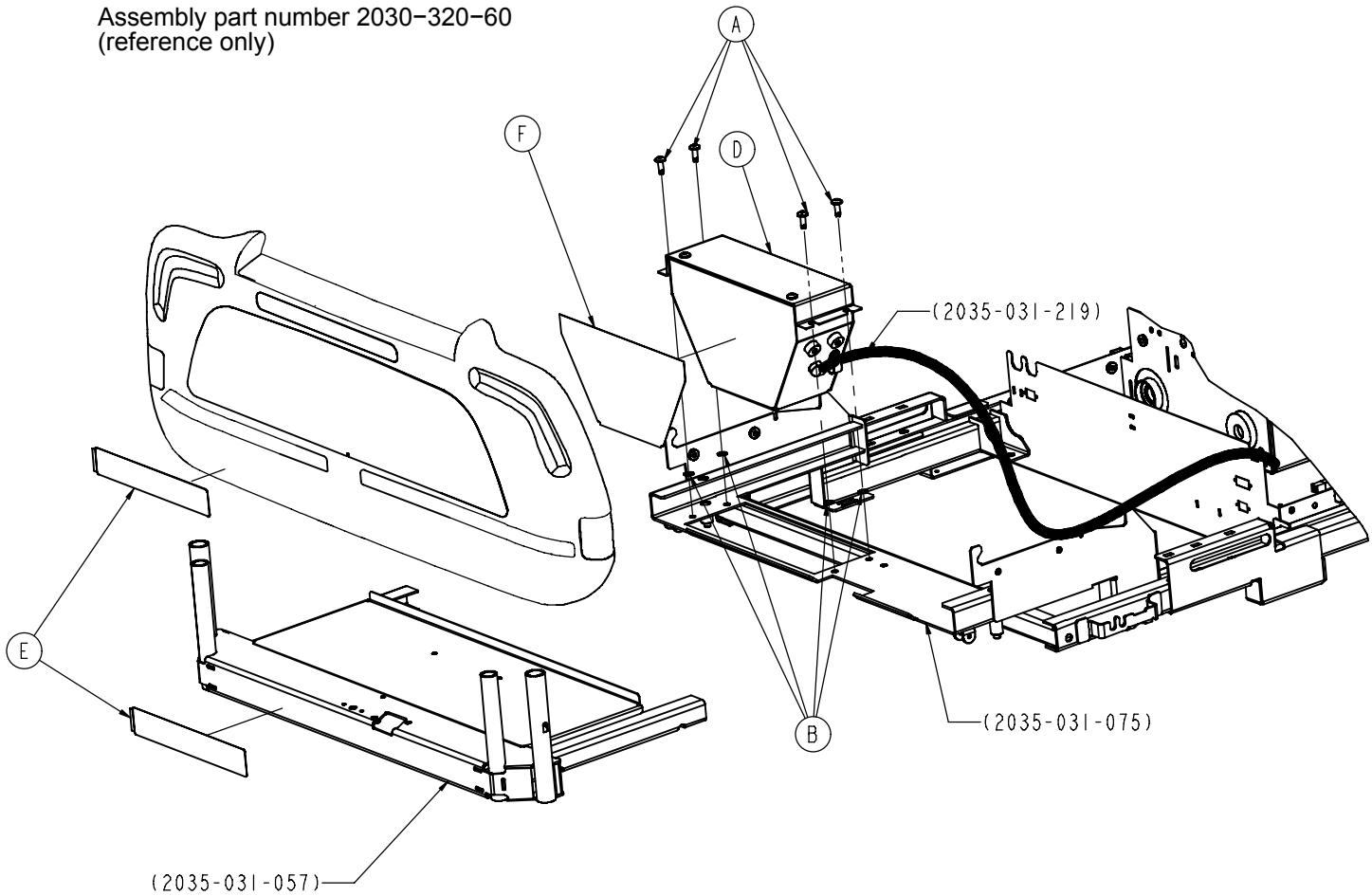

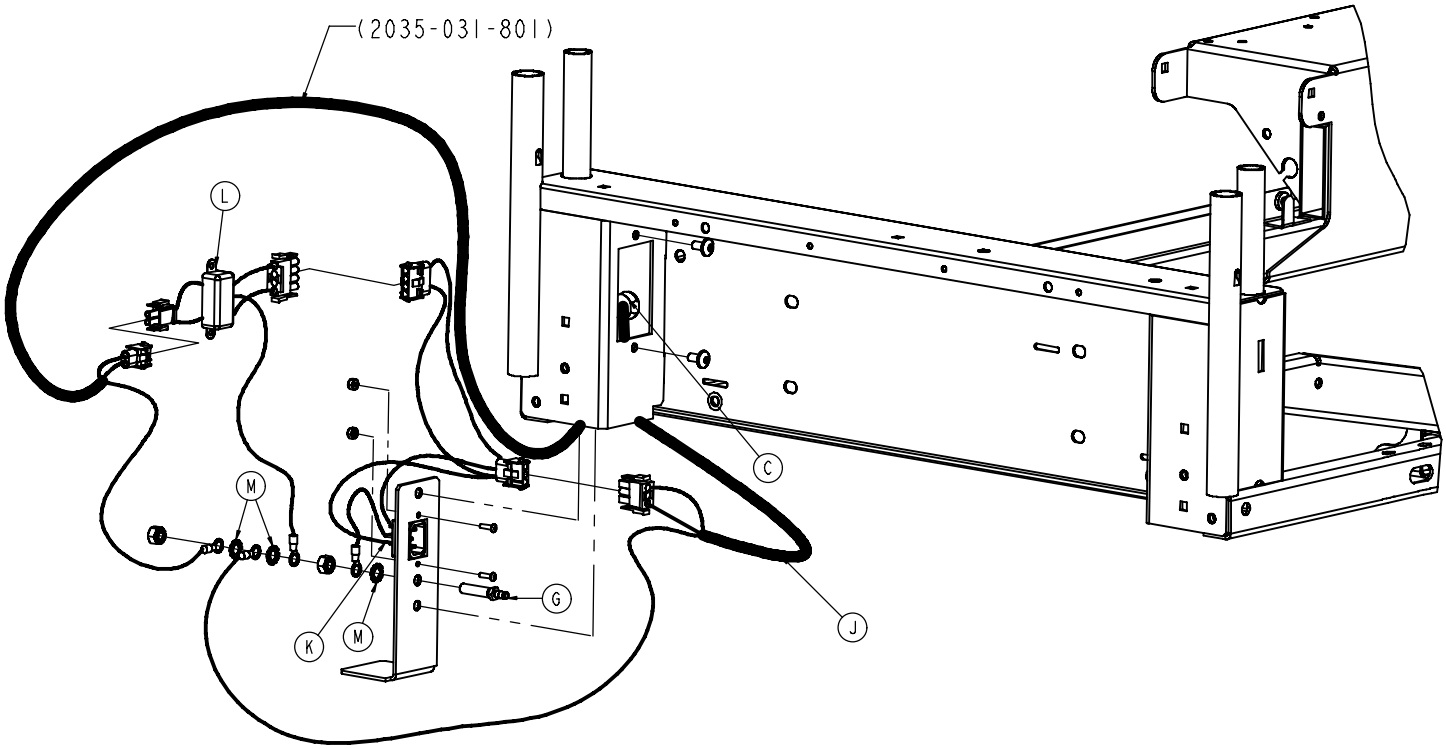

Optional Epic II 110V Outlet Assembly

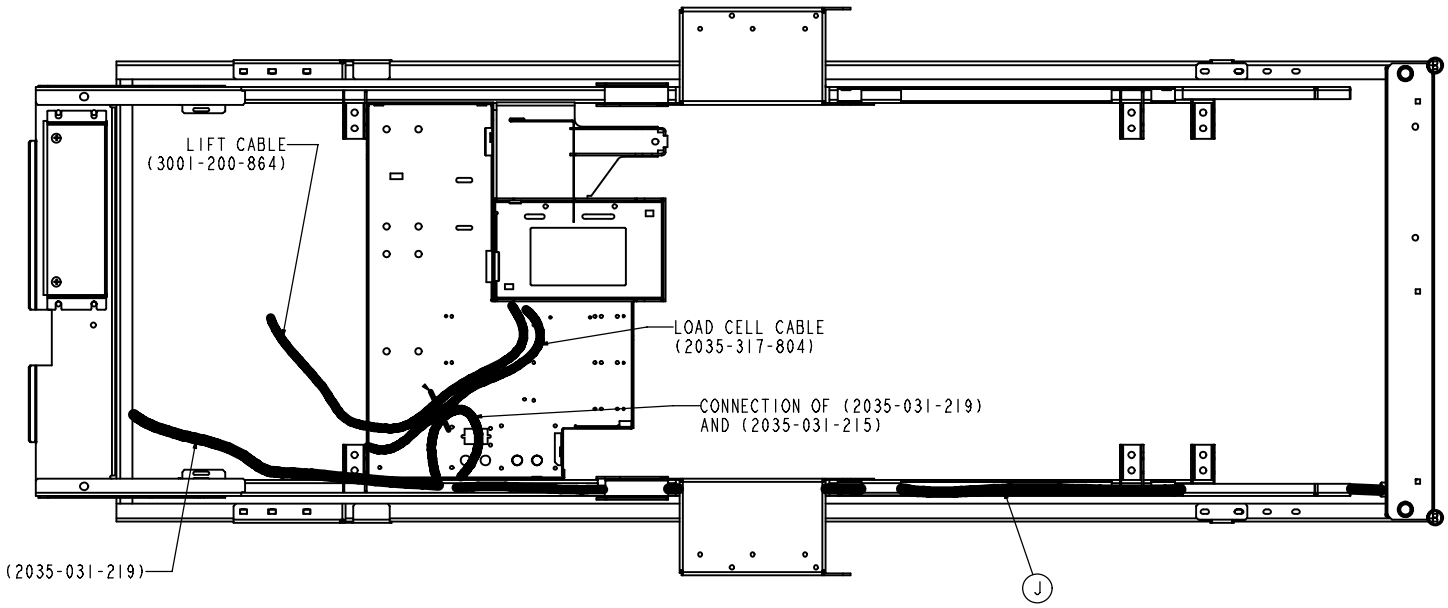

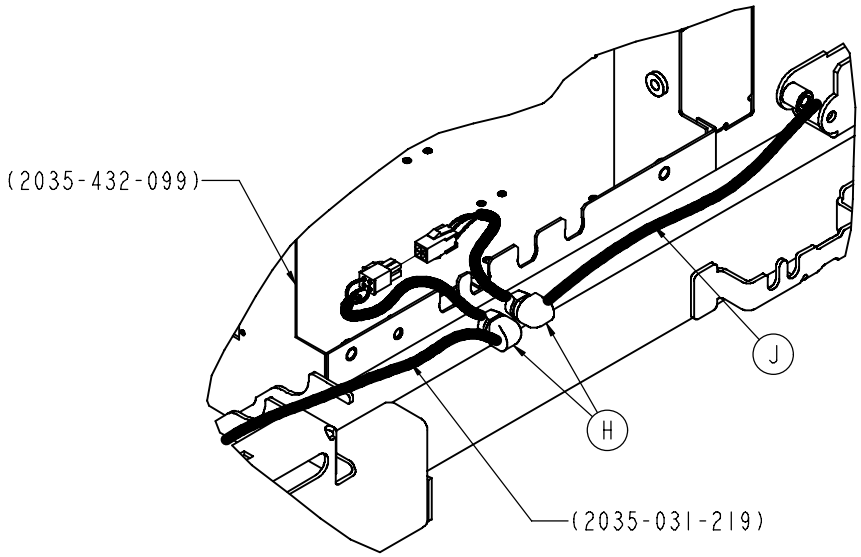

Item	Part No.	Part Name	Qty.
A	7−58	Truss Hd. Screw	4
B	13−10	External Tooth Lock Washer	4
C	59−106	Heyco	1
D	2035−31−220	110V Box Assembly	1
E	2035−31−204	110V Outlet Caution Label	2
F	2035−31−205	Epic II Box Label	1
G	2030−1−215	Lug	1
H	30−47	Heyco	2
J	2035−31−215	110V Supply Cable	1
K	2035−31−216	110V Head End Cable	1
L	2035−31−218	Epic II 110V Filter	1
M	13−38	Washer	3

No Optional 110V Outlet − Epic II

Assembly part number 2030−320−61
(reference only)

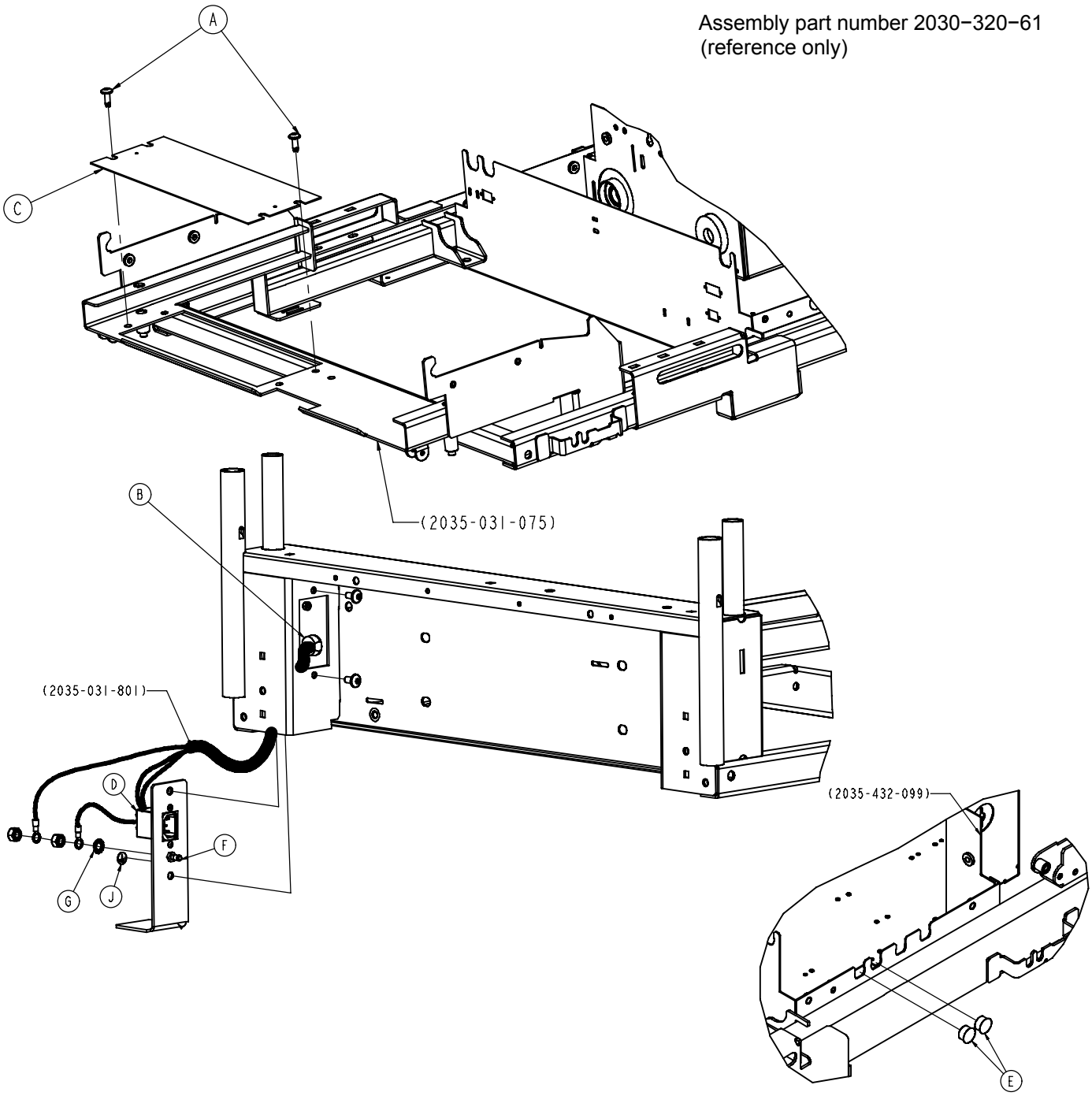

Item	Part No.	Part Name	Qty.
A	7−58	Truss Hd. Screw	2
B	30−27	Strain Relief Bushing	1
C	2035−31−203	Foot Cross Brace Cover	1
D	2035−31−880	Power Inlet Cable	1
E	37−85	Hole Plug	2
F	2011−1−215	Grounding Lug	1
G	13−38	Washer	1

No Optional 110V Outlet − Epic II+

Assembly part number 2035−320−61 (reference only)

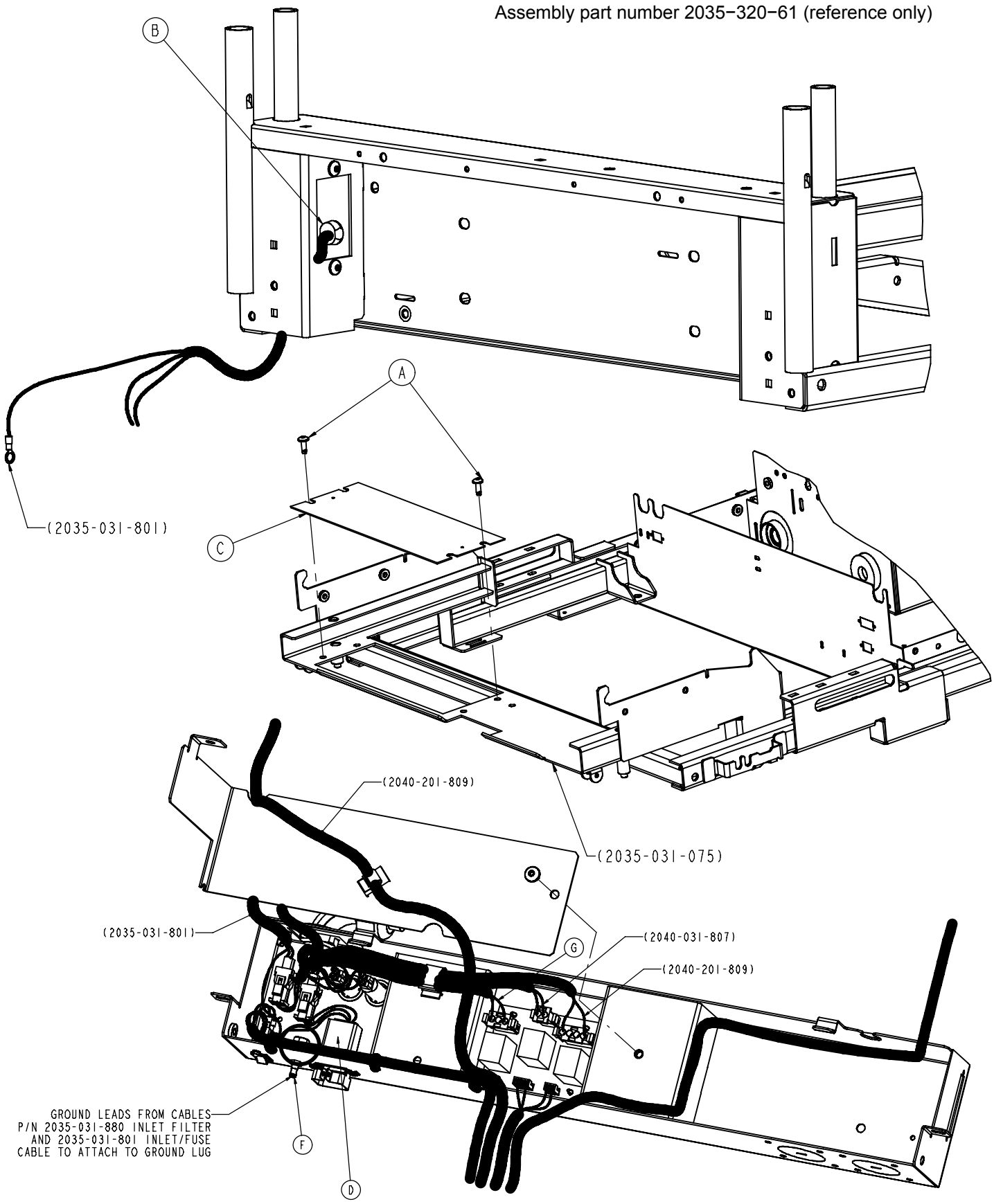

No Optional 110V Outlet − Epic II+

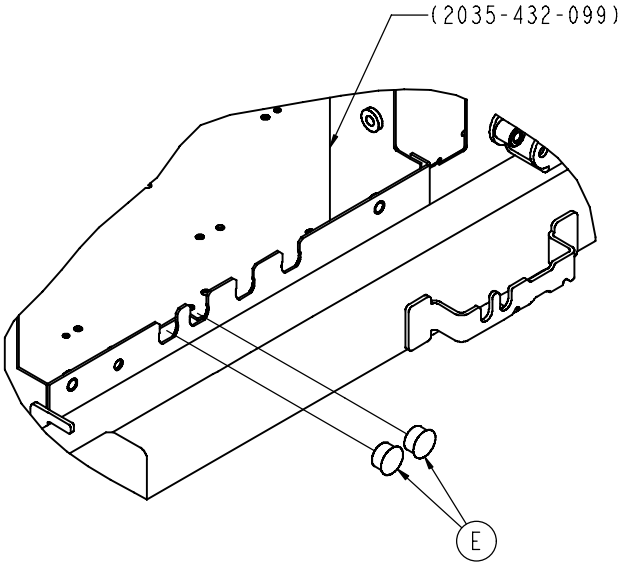

Item	Part No.	Part Name	Qty.
A	7−58	Truss Hd. Screw	2
B	30−27	Strain Relief Bushing	1
C	2035−31−203	Foot Cross Brace Cover	1
D	2035−31−880	Power Inlet Cable	1
E	37−85	Hole Plug	2
F	2011−1−215	Lug, Grounding	1
G	2040−31−808	AC Jumper Charger	1

Optional Epic II+ 110V Outlet Assembly

Assembly part number 2035−320−60
(reference only)

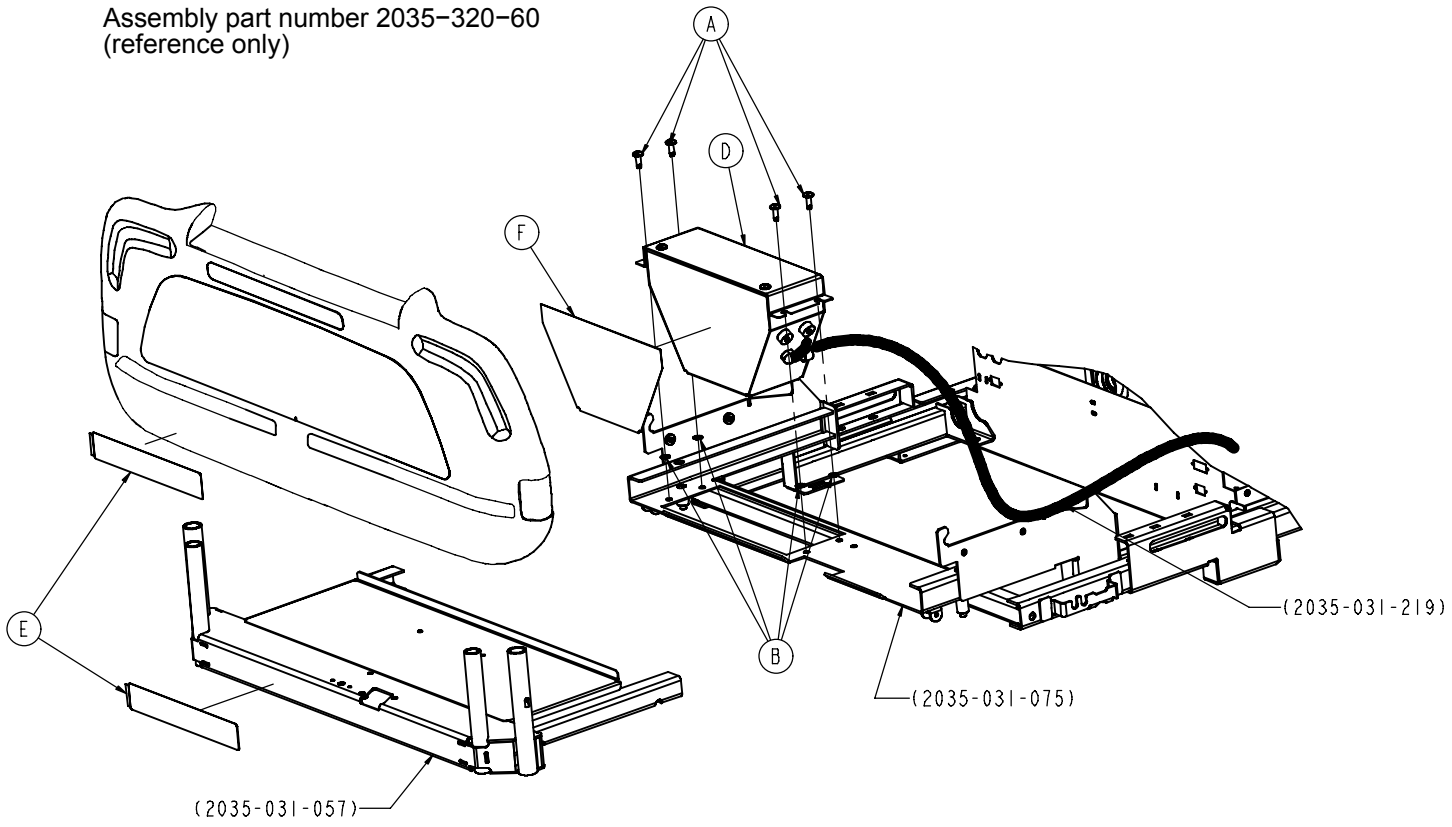

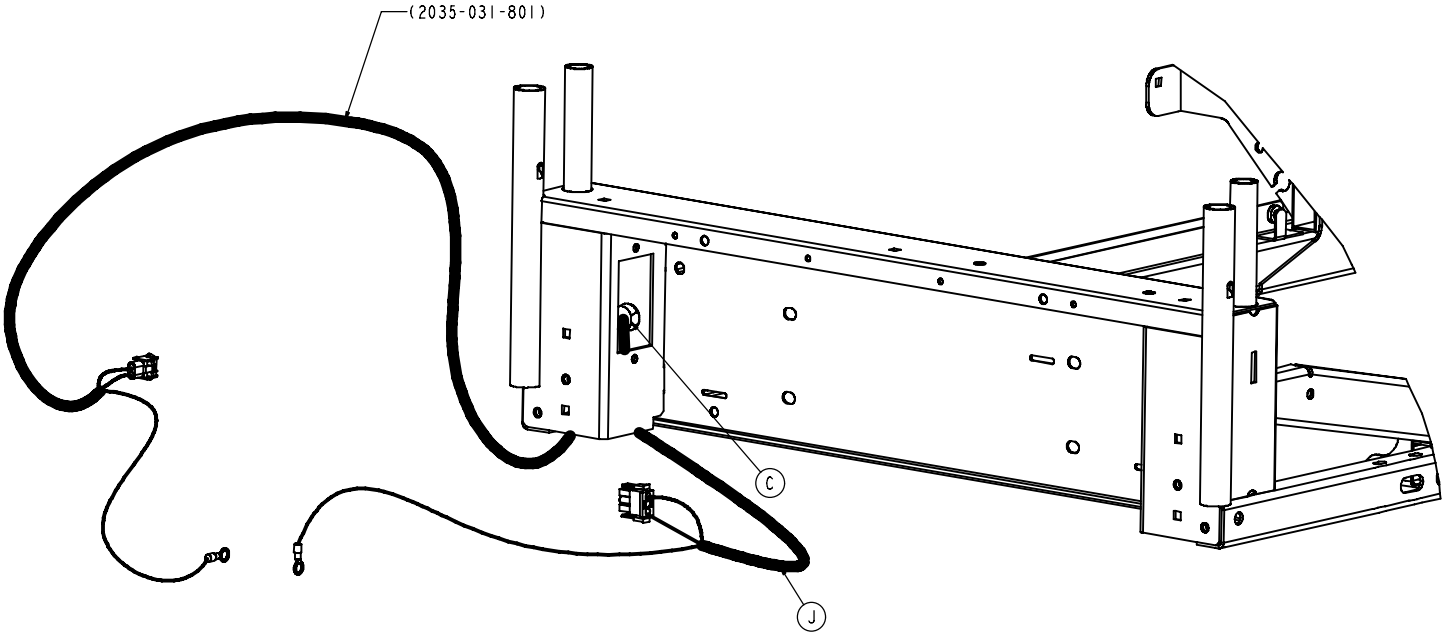

Optional Epic II+ 110V Outlet Assembly

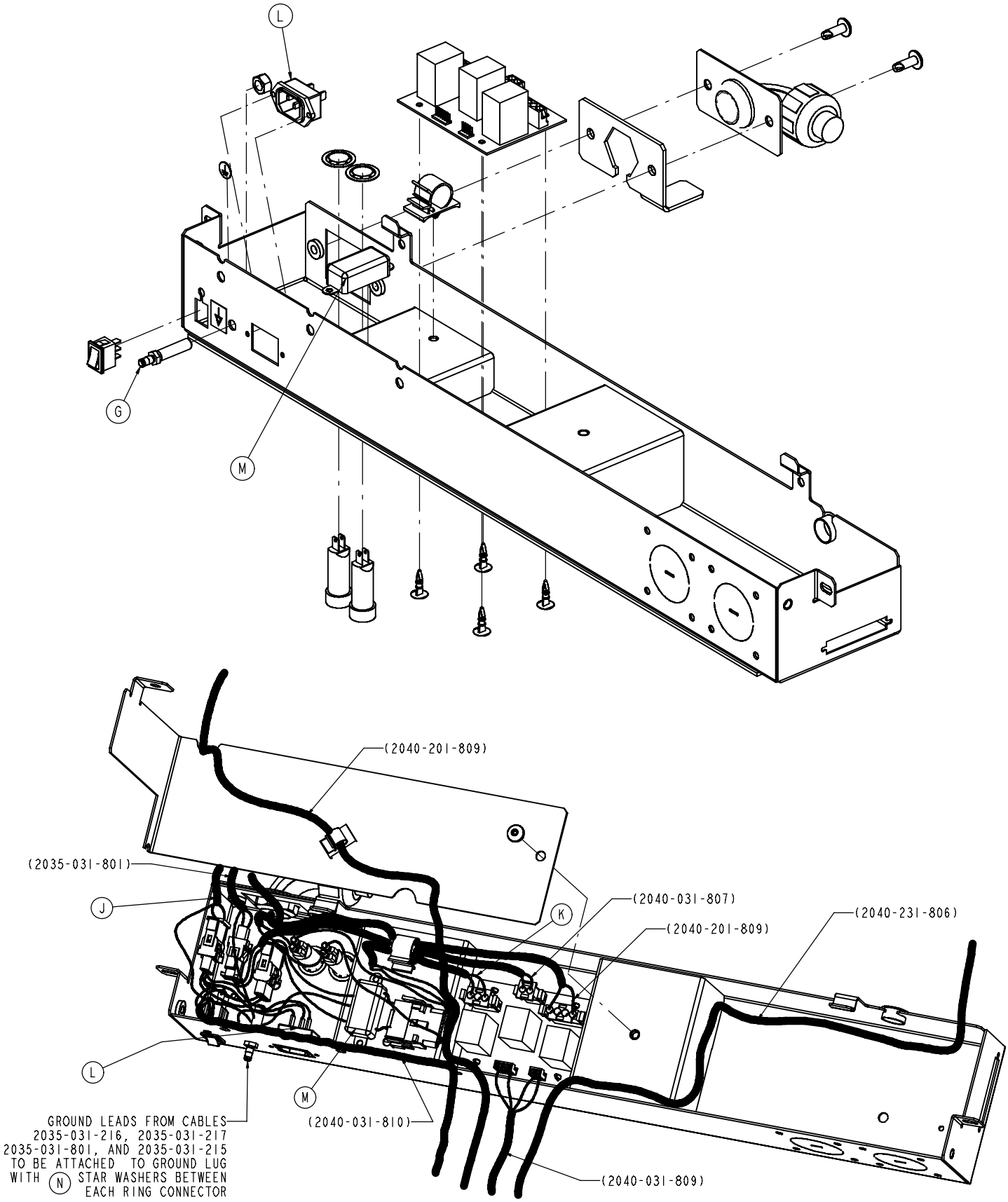

Optional Epic II+ 110V Outlet Assembly

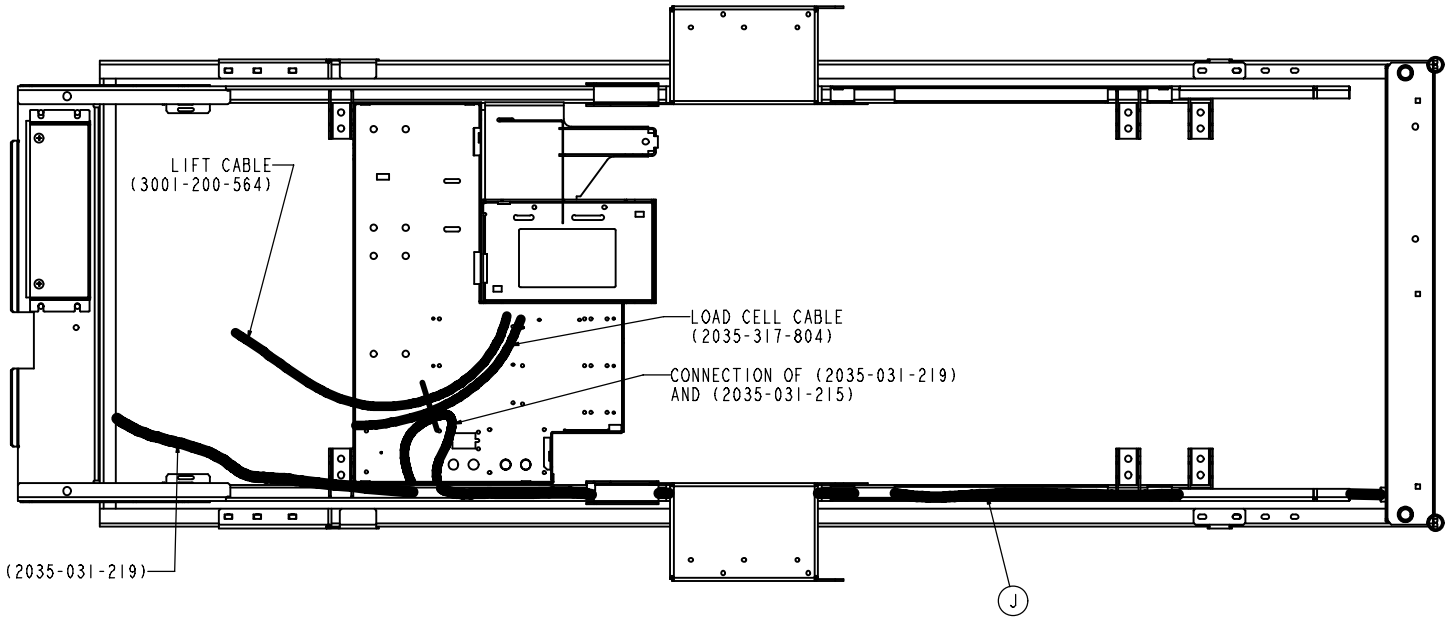

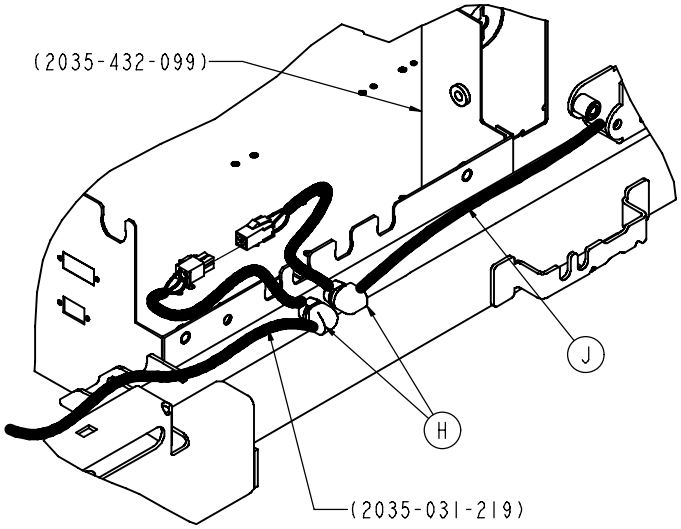

Item	Part No.	Part Name	Qty.
A	7−58	Truss Hd. Screw	4
B	13−10	External Tooth Lock Washer	4
C	59−106	Heyco	1
D	2035−31−220	110V Box Assembly	1
E	2035−31−204	110V Outlet Caution Label	2
F	2035−31−205	Epic II Box Label	1
G	2030−1−215	lug, grounding	1
H	30−47	Heyco	2
J	2035−31−215	Cable, 110V Supply	1
K	2040−31−811	Charger AC Jumper	1
L	2035−31−216	Cable, 110V Head End	1
M	2035−31−217	Filter, 110V Zoom	1
N	13−38	Washer	3

2035−31−220 110V Box Assembly

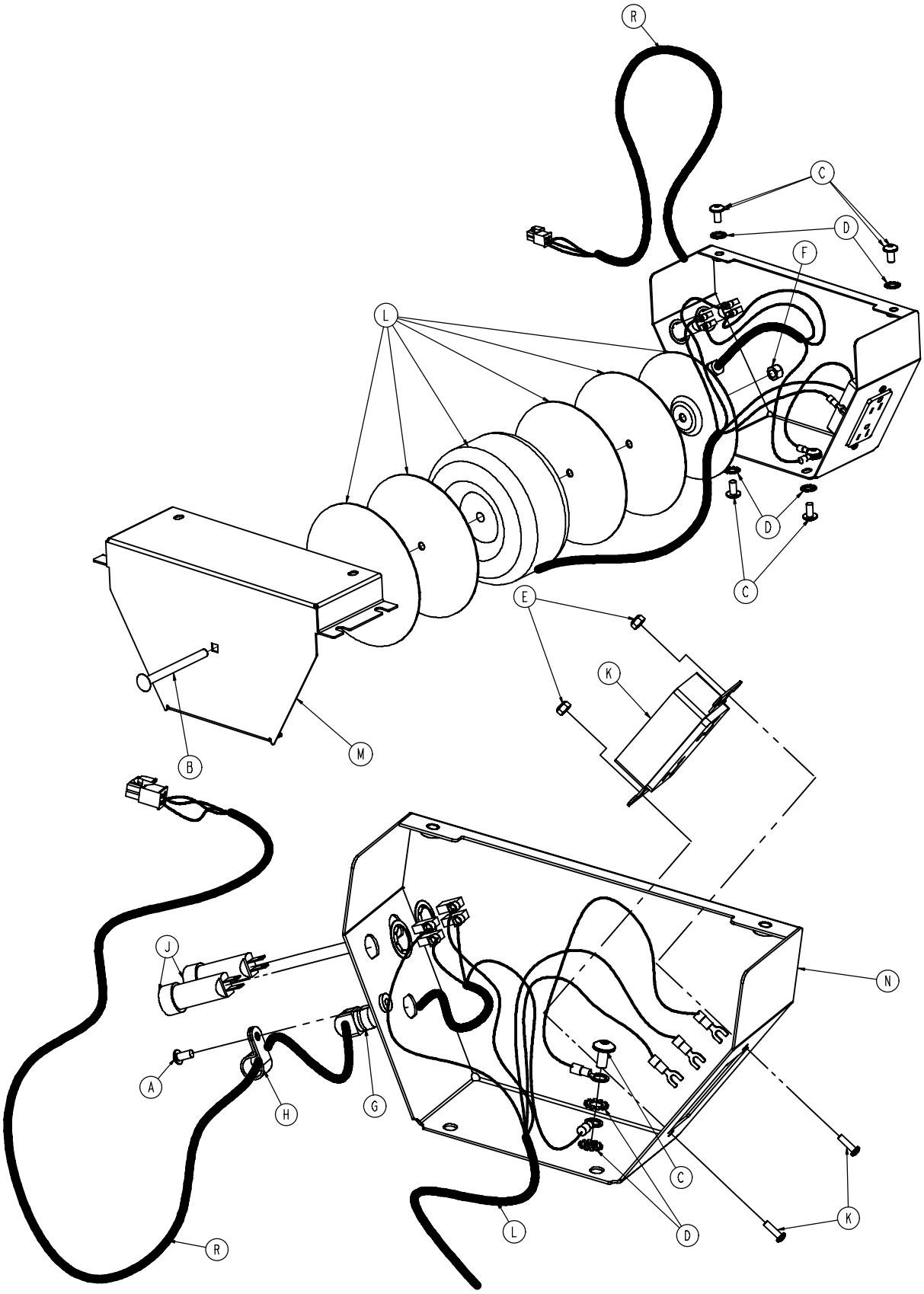

2035−31−220 110V Box Assembly

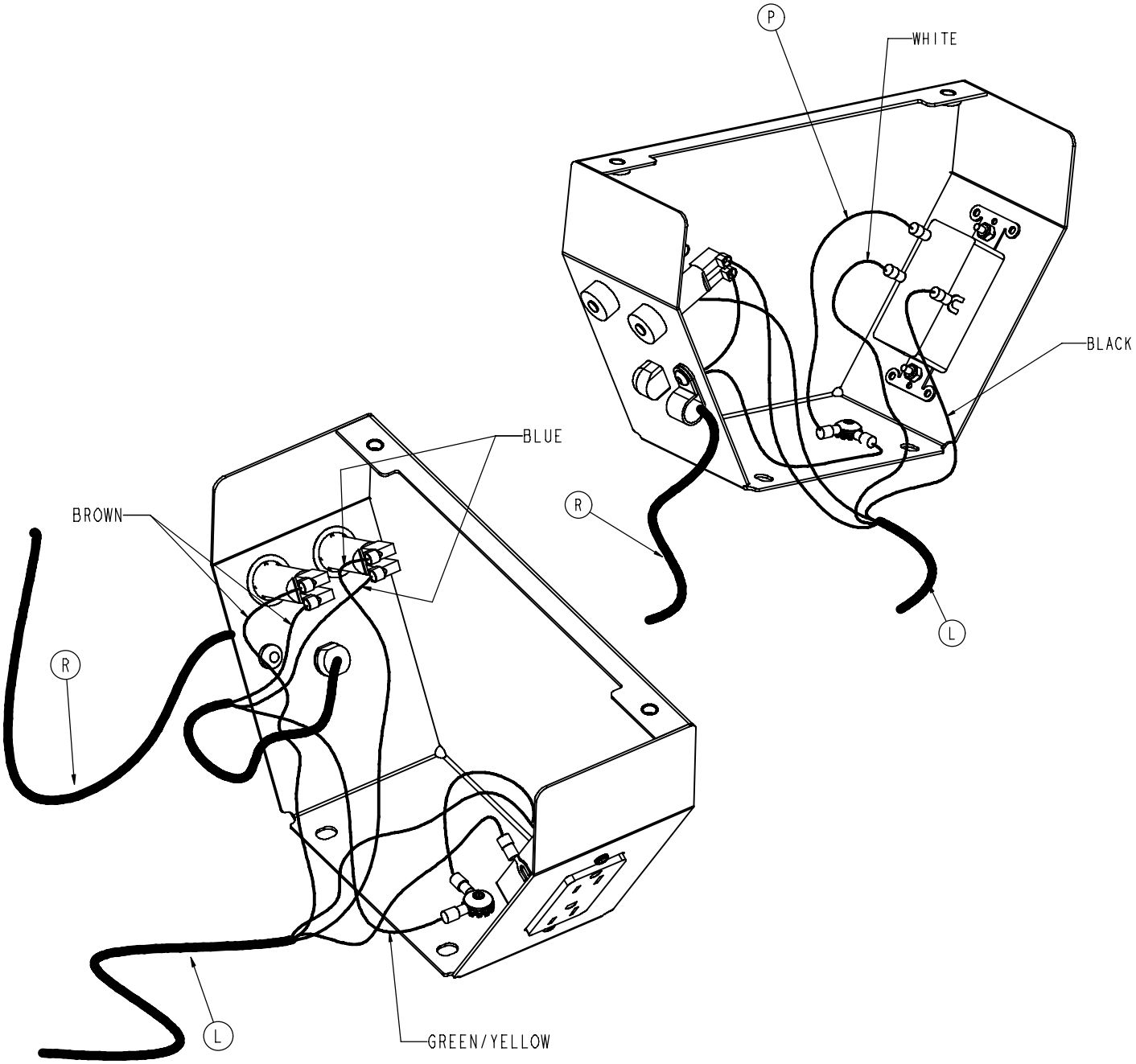

Item	Part No.	Part Name	Qty.	Item	Part No.	Part Name	Qty.
A	4−442	But. Hd. Cap Screw	1	J	59−43	5 Amp. Circuit Breaker	2
B	5−43	Carriage Bolt	1	K	59−732	HG Duplex Receptacle	1
C	7−58	Truss Hd. Mach. Screw	5	L	2030−1−9	Transformer	1
D	13−38	Ext. Tooth Lock Washer	6	M	2030−31−201	110V Box Cover	1
E	16−23	FIberlock Hex Nut	2	N	2035−31−202	110V Box	1
F	16−36	Nylock Hex Nut	1	P	2035−31−214	110V Ground Cable	1
G	30−47	Heyco	1	R	2035−31−219	110V Supply Cable	1
H	34−22	Cord Clamp	1				

Head End Siderail Assembly

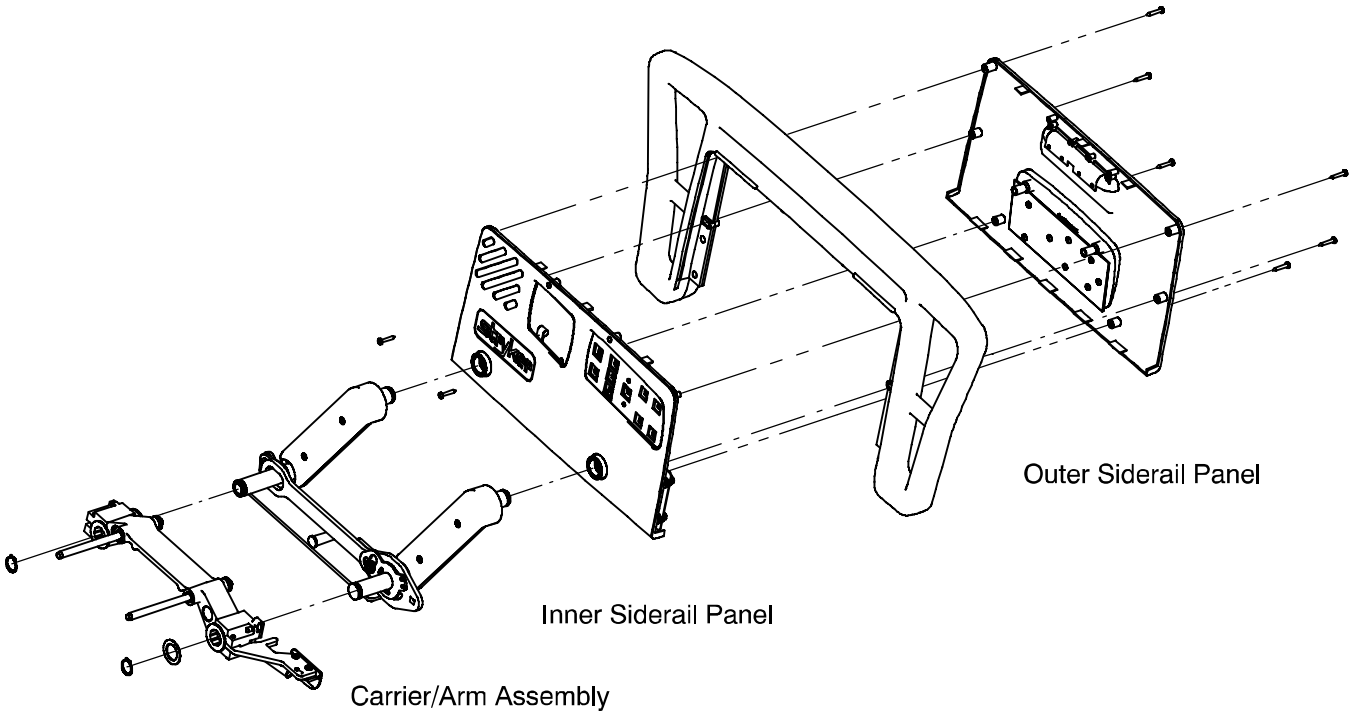

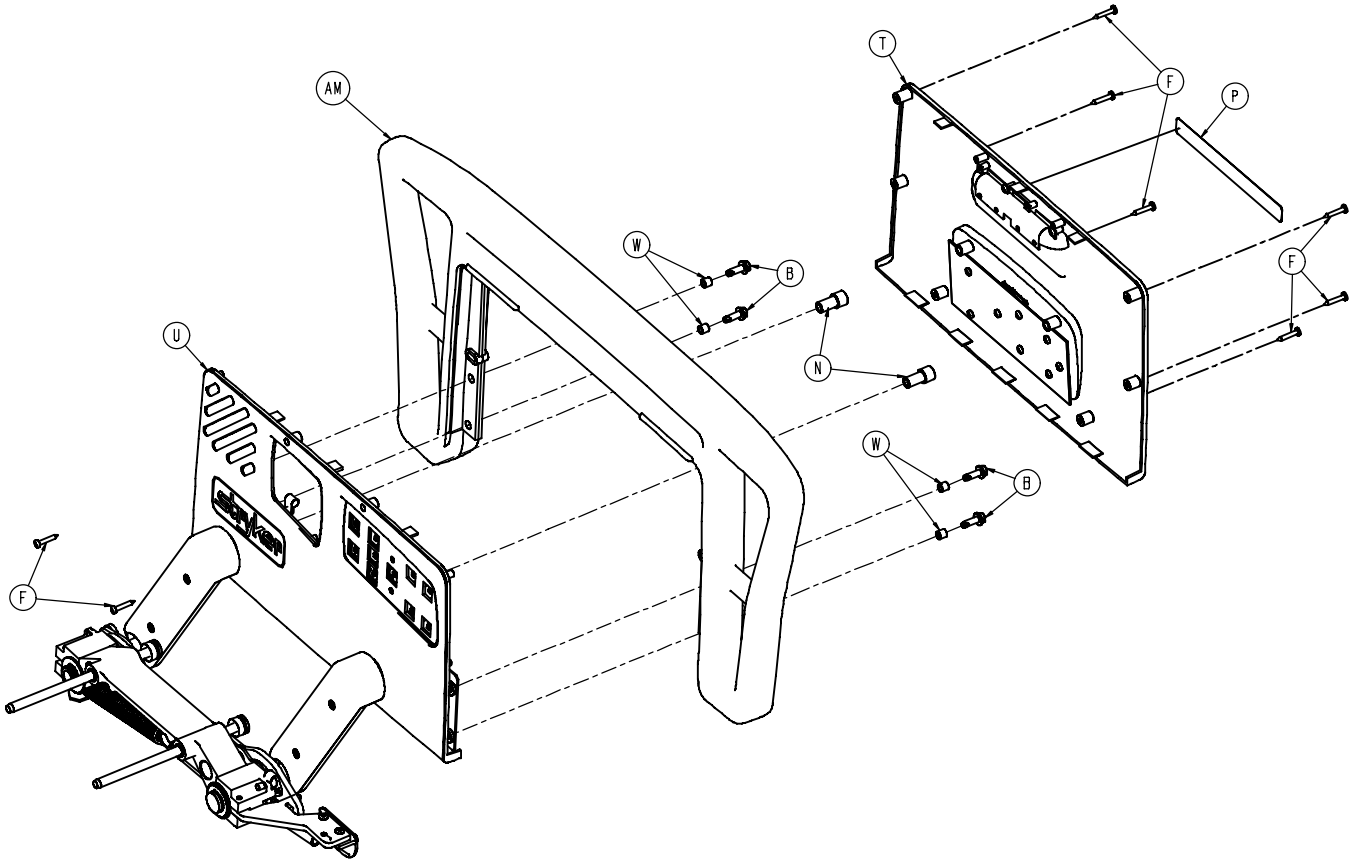

Head End Siderail Assembly

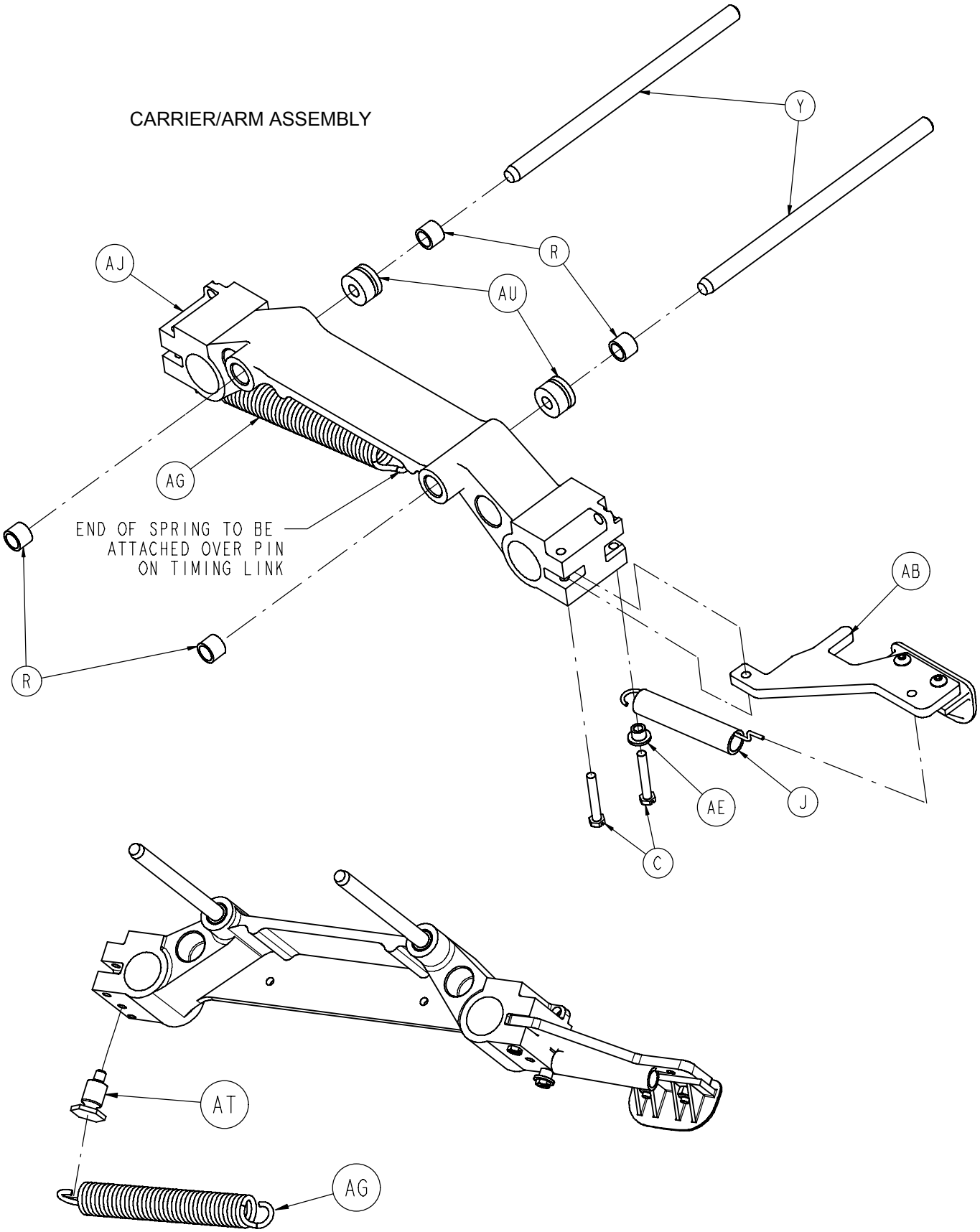

Head End Siderail Assembly

CARRIER/ARM ASSEMBLY

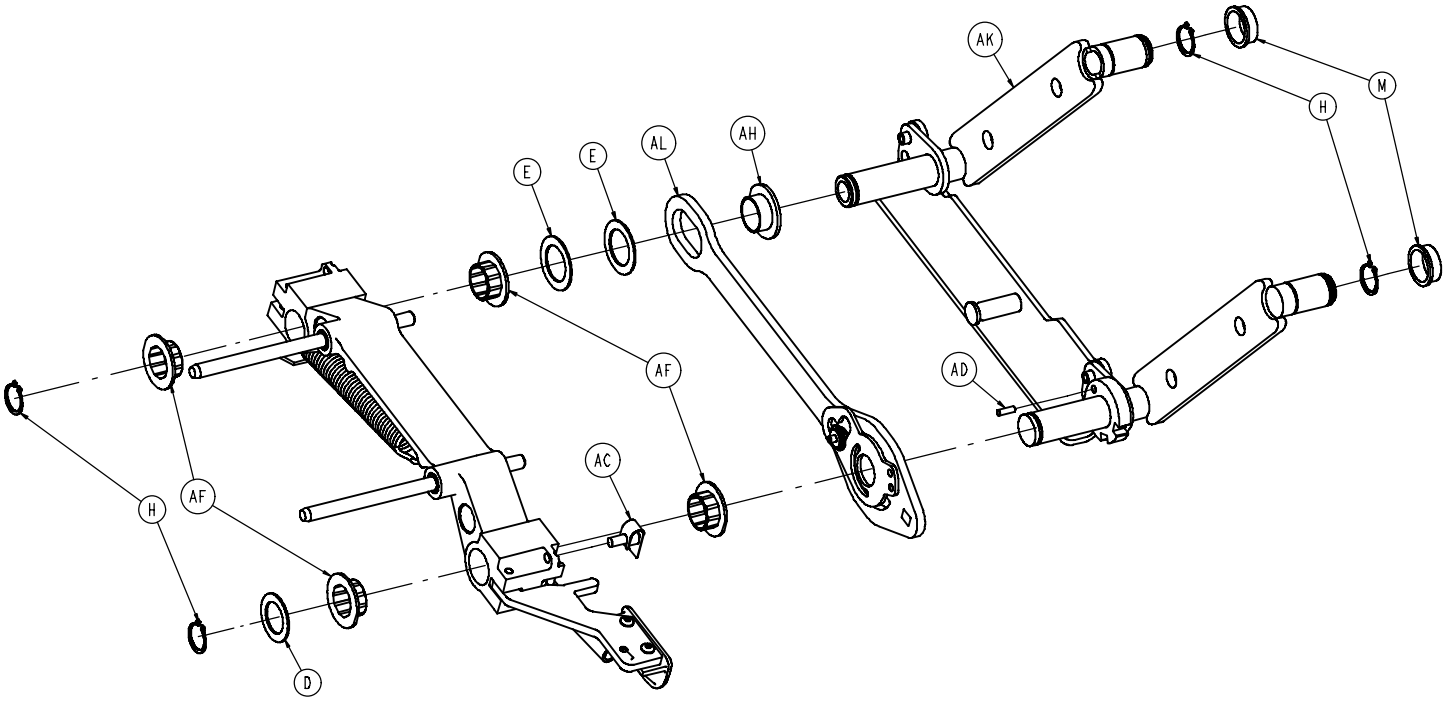

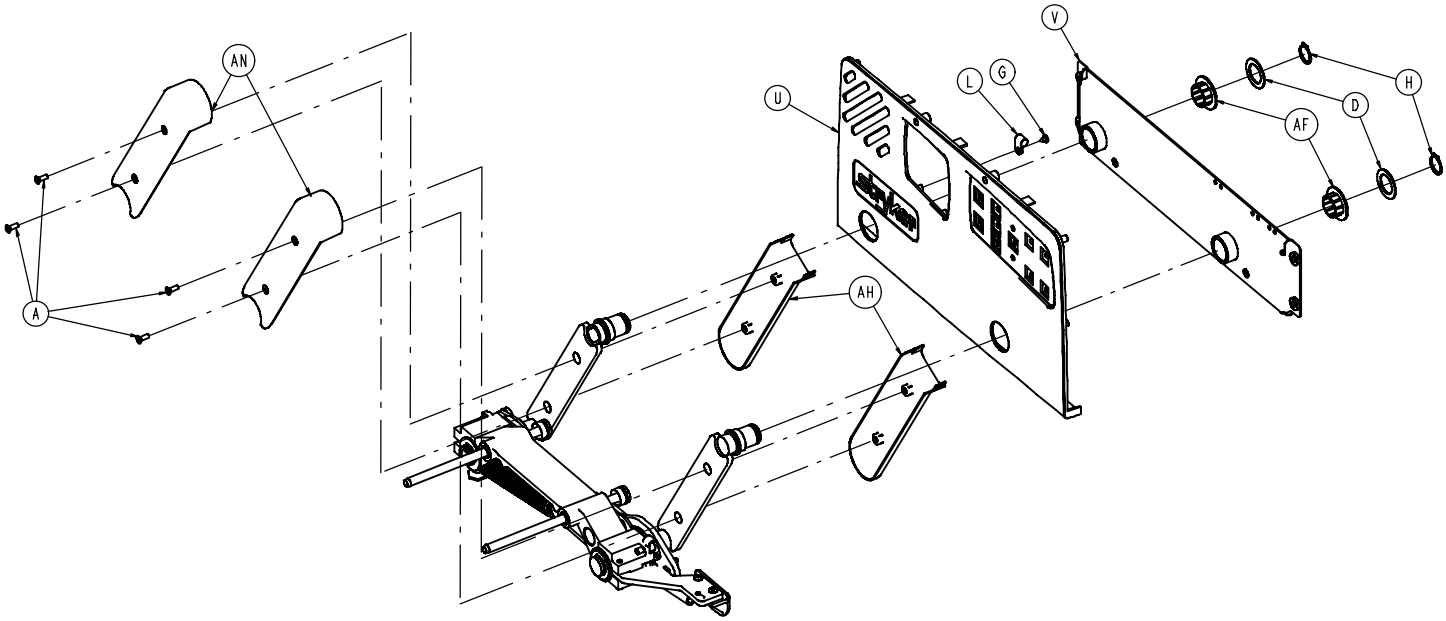

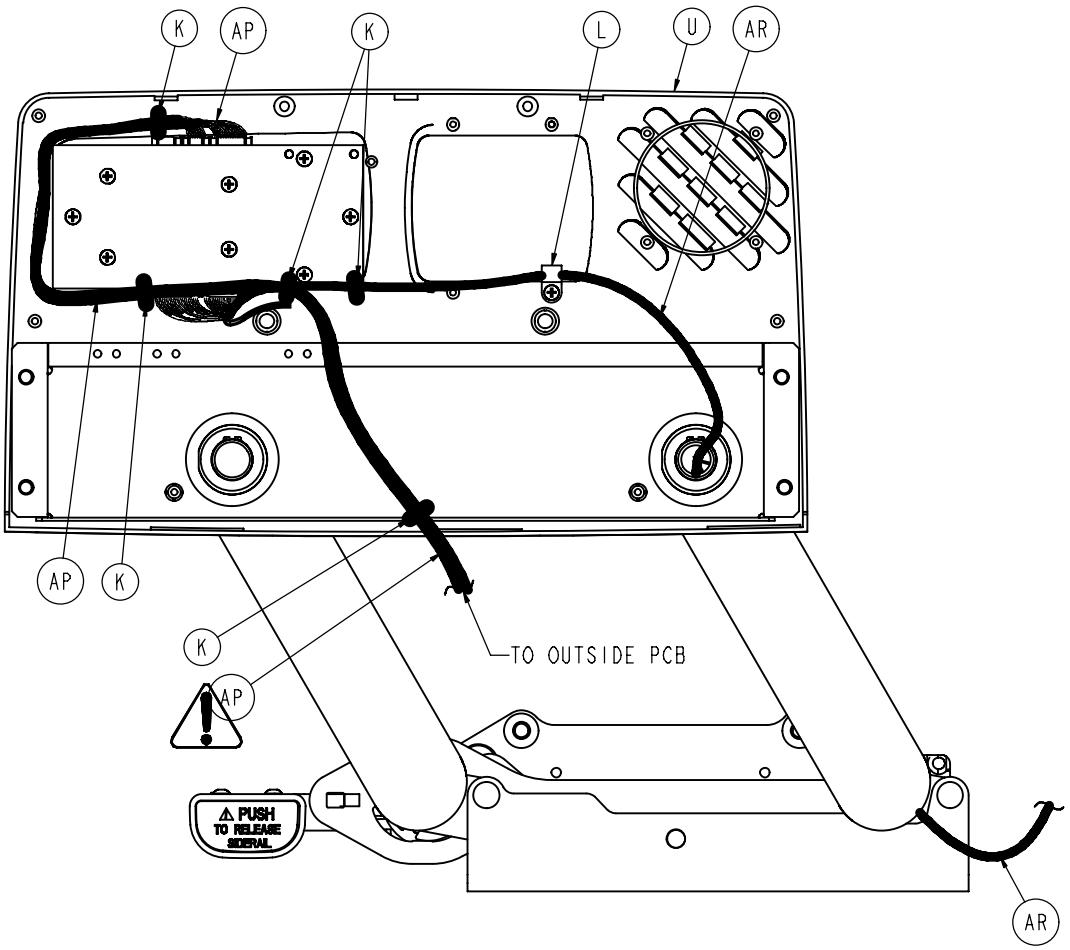

LEFT HEAD END SIDERAIL WIRE ROUTING

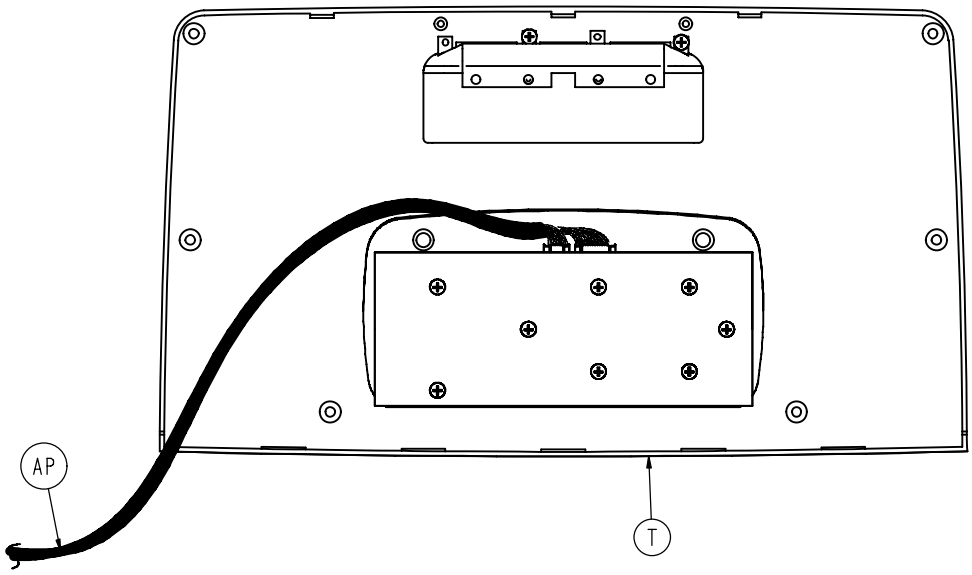

Head End Siderail Assembly

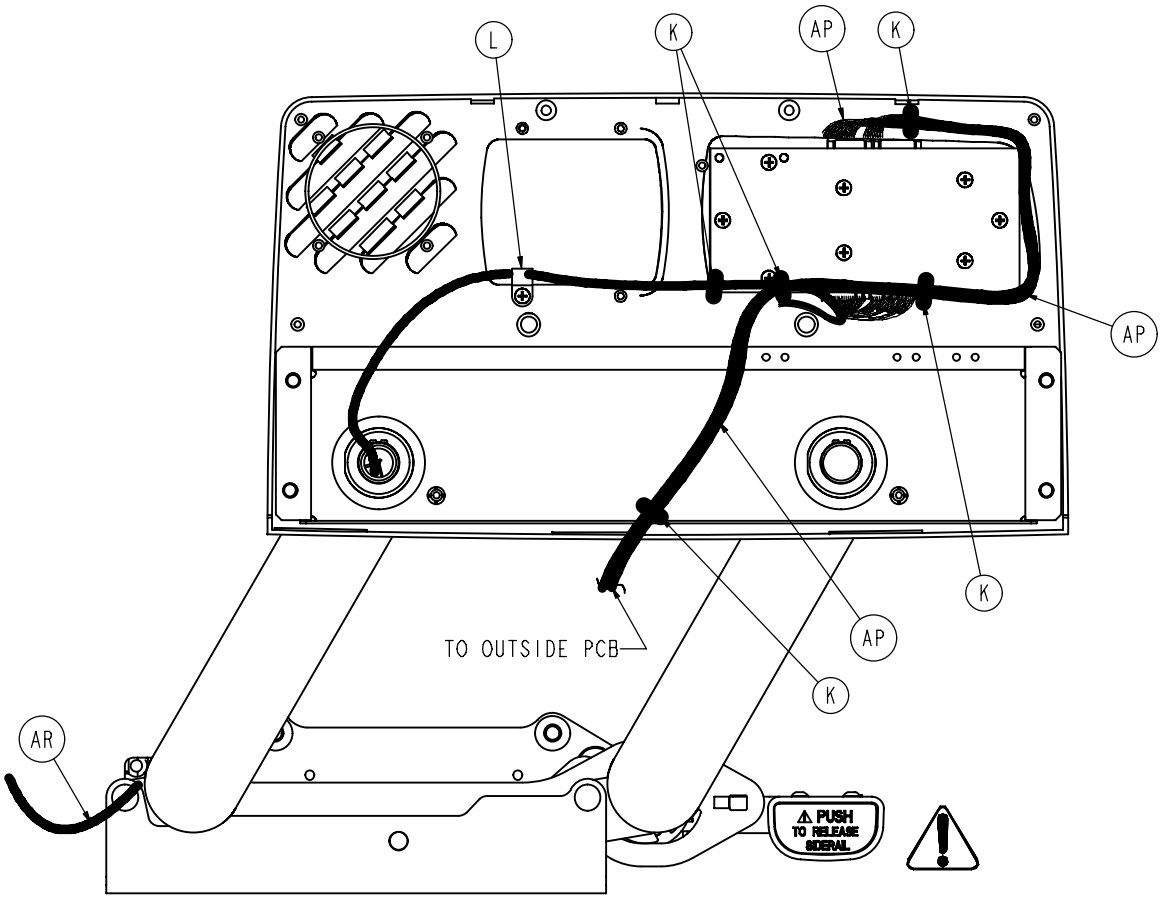

RIGHT HEAD END SIDERAIL WIRE ROUTING

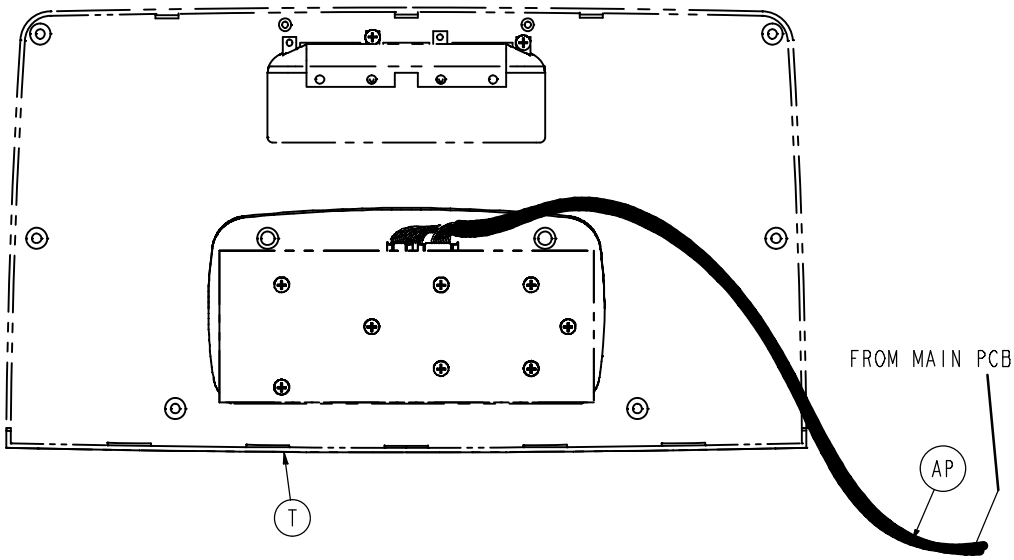

Head End Siderail Assembly

2032−402−105 Left Standard Components

Item	Part No.	Part Name	Qty.
A	0001−072−000	Ph. Flat Hd. Mach. Screw	4
B	0003−226−000	Hex Washer Hd. Screw	4
C	0003−344−000	Hex Hd. Screw	2
D	0011−343−000	Shim Washer	3
E	0014−093−000	Washer	2
F	0023−090−000	High−Low Tapping Screw	8
G	0023−112−000	High−Low Tapping Screw	1
H	0028−128−000	Retaining Ring	6
J	3000−200−334	Release Lever Spring	1
K	3000−300−114	Cable Tie	5
L	3000−300−478	CPR Conduit Clamp	1
M	3000−400−513	Wear Bushing	2
N	3000−400−523	Panel Spacer	2
P	3000−400−556	Warning Label	1
R	3000−400−557	Sleeve Bearing	4
T	(page 153)	Outer Panel Assembly	1
U	(page 154)	Inner Panel Assembly, Lt.	1
V	3003−400−130	Support Weldment HE Lt.	1
W	3001−400−558	SIderail Spacer	4
Y	2035−400−570	Glide Rod	2
AA	3001−400−619	Outer Arm Cover	2
AB	(page 159)	Release Lever Ass'y, Left	1
AC	(page 152)	Ball Detent Clip Assembly	1
AD	3002−400−505	Bypass Pin	1
AE	3002−400−509	Spacer	1
AF	3002−400−513	Pivot Bushing	6
AG	3003−402−517	Foot Rail Tuck Spring	1
AH	3002−400−519	Latch Bushing	1
AJ	3002−400−528	Carrier	1
AK	3003−402−005	HE Timing Link Ass'y Lt.	1
AL	(page 146)	Latch Ass'y, Head, Left	1
AM	3003−400−515	Head Rail	1
AN	5000−020−005	Inner Arm Cover	2
AP	3001−400−802	Main Outside Cable, Lt.	1
AR	3001−400−862	Siderail Cable	1
AT	3003−402−114	Spring Attachment Pin	1
AU	0030−040−000	Grommet	2

2032−402−205 Right Standard Components

Item	Part No.	Part Name	Qty.
A	0001−072−000	Ph. Flat Hd. Mach. Screw	4
B	0003−226−000	Hex Washer Hd. Screw	4
C	0003−344−000	Hex Hd. Screw	2
D	0011−343−000	Shim Washer	3
E	0014−093−000	Washer	2
F	0023−090−000	High−Low Tapping Screw	8
G	0023−112−000	High−Low Tapping Screw	1
H	0028−128−000	Retaining Ring	6
J	3000−200−334	Release Lever Spring	1
K	3000−300−114	Cable Tie	5
L	3000−300−478	CPR Conduit Clamp	1
M	3000−400−513	Wear Bushing	2
N	3000−400−523	Panel Spacer	2
P	3000−400−556	Warning Label	1
R	3000−400−557	Sleeve Bearing	4
T	(page 153)	Outer Panel Assembly	1
U	(page 154)	Inner Panel Assembly, Rt.	1
V	3003−400−230	Support Weldment HE Rt.	1
W	3001−400−558	SIderail Spacer	4
Y	3001−400−564	Glide Rod	2
AA	3001−400−619	Outer Arm Cover	2
AB	(page 160)	Release Lever Ass'y, Right	1
AC	(page 152)	Ball Detent Clip Assembly	1
AD	3002−400−505	Bypass Pin	1
AE	3002−400−509	Spacer	1
AF	3002−400−513	Pivot Bushing	6
AG	3003−402−517	Foot Rail Tuck Spring	1
AH	3002−400−519	Latch Bushing	1
AJ	3002−400−528	Carrier	1
AK	3003−402−010	HE Timing Link Ass'y RH	1
AL	(page 157)	Latch Ass'y, Head, Right	1
AM	3003−400−515	Head Rail	1
AN	5000−020−005	Inner Arm Cover	2
AP	3001−400−801	Main Outside Cable, Rt.	1
AR	3001−400−862	Siderail Cable	1
AT	3003−402−114	Spring Attachment Pin	1
AU	0030−010−000	Grommer	2

Head End Siderail Assembly

2030−20−11 Standard Siderail

Item	Part No.	Part Name	Qty.
CA	2035−000−100	Label, Standard, Left	1
CA	2035−000−200	Label, Standard, Right	1
CC	3001−400−953	Switch Cap	28
CD	3001−400−522	Filler Cap	18
CE	3001−400−517	Speaker Seal	2
CF	3001−400−535	Inner Panel Blank Module	2
CH	2030−000−300	Label, Standard, Left	1
CH	2030−000−400	Label, Standard, Right	1

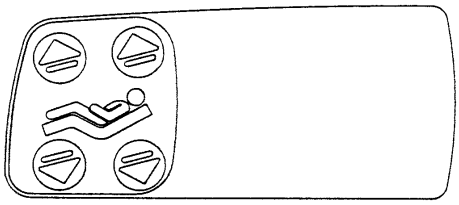

Right Inner Siderail Label

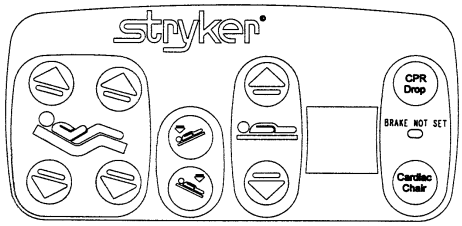

Right Outer Siderail Label

2030−20−12 Standard Siderail with Nurse Call

Item	Part No.	Part Name	Qty.
CA	2035−000−101	Label, Standard, NC, Left	1
CA	2035−000−201	Label, Standard, NC, Right	1
CC	3001−400−953	Switch Cap	32
CD	3001−400−522	Filler Cap	14
CE	3001−403−831	Speaker with Cable	2
CF	3001−400−535	Inner Panel Blank Module	2
CH	2030−000−301	Label, Standard, NC, Left	1
CH	2030−000−401	Label, Standard, NC, Right	1

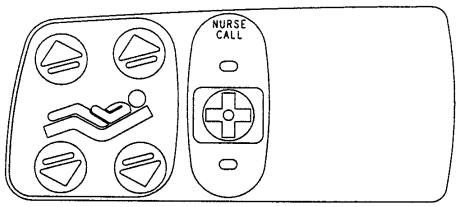

Right Inner Siderail Label

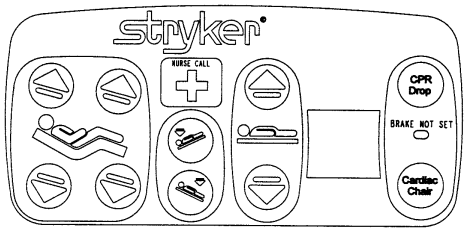

Right Outer Siderail Label

2030−20−15 Standard Siderail w/NC & Comm.

Item	Part No.	Part Name	Qty.
CA	2035−000−102	Label, Standard, Left	1
CA	2035−000−202	Label, Standard, Right	1
CC	3001−400−953	Switch Cap	42
CD	3001−400−522	Filler Cap	4
CE	3001−403−831	Speaker with Cable	2
CF	3001−400−535	Inner Panel Blank Module	2
CH	2030−000−301	Label, Standard, NC, Lt.	1
CH	2030−000−401	Label, Standard, NC, Rt.	1

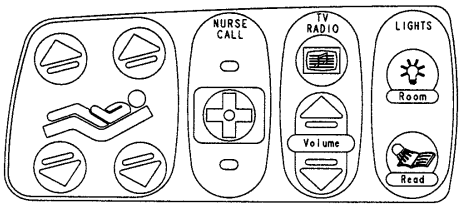

Right Inner Siderail Label

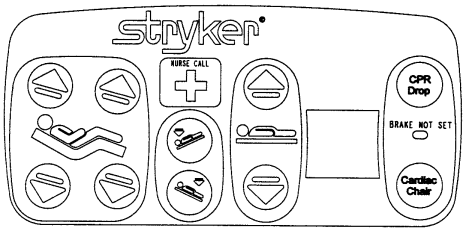

Right Outer Siderail Label

2030−20−15 Standard Siderail w/NC & Comm.

Item	Part No.	Part Name	Qty.
CA	2035−000−102	Label, Standard, Left	1

2030−20−21 Standard Siderail w/NC & STV Comm.

Item	Part No.	Part Name	Qty.
AN	3000−300−114	Cable Tie	3
CA	2035−000−106	Label, Std, NC, STV−Comm Rt.	1
CA	2035−000−206	Label, Std, NC, STV−Comm Lt.	1
CB	2035−000−109	STV−CC & Mute, Lt.	1
CB	2035−000−029	STV−CC & Mute, Rt.	1
CC	3001−400−953	Switch Cap	42
CD	3001−400−522	Filler Cap	4
CE	3001−403−831	Speaker with Cable	2
CF	2035−400−051	Lumbar/TV Module, LH	1
CF	2035−400−053	Lumbar/TV Module, RH	1
CH	2035−000−301	Label, Std, NC	1
CH	2030−000−401	Label, Std, NC	1
CJ	3001−402−804	Cable LH	2

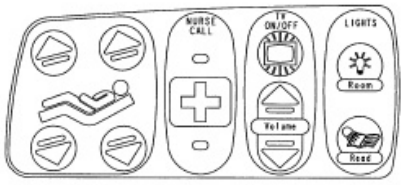

Right Inner Siderail Label

3003−402−005 Timing Link Assembly, Head End, Left

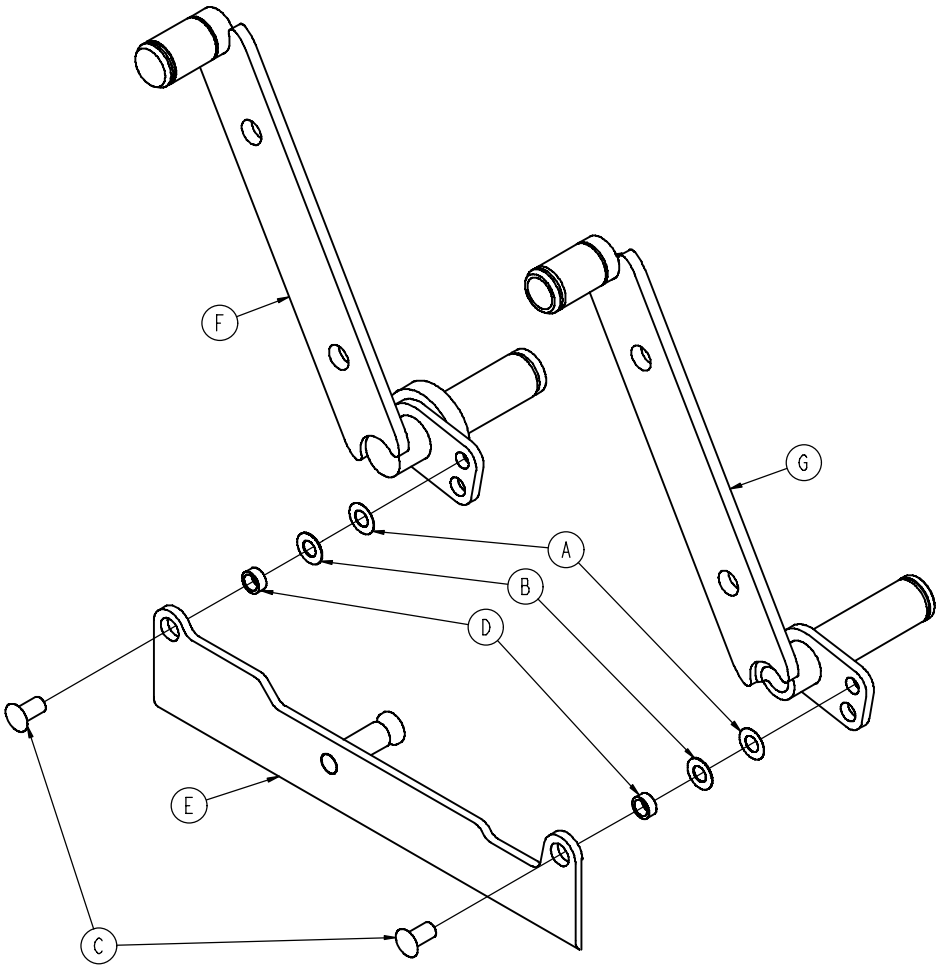

Item	Part No.	Part Name	Qty.
A	0011−377−000	Washer	2
B	0011−491−000	Washer	2
C	3001−400−501	Siderail Linkage Rivot	2
D	3003−401−001	Bushing	2
E	3003−402−112	Timing Link	1
F	3003−402−127	Arm Weldment − LHF	1
G	3003−402−128	Arm Weldment − LHH	1

3003−402−010 Timing Link Assembly, Head End, Right

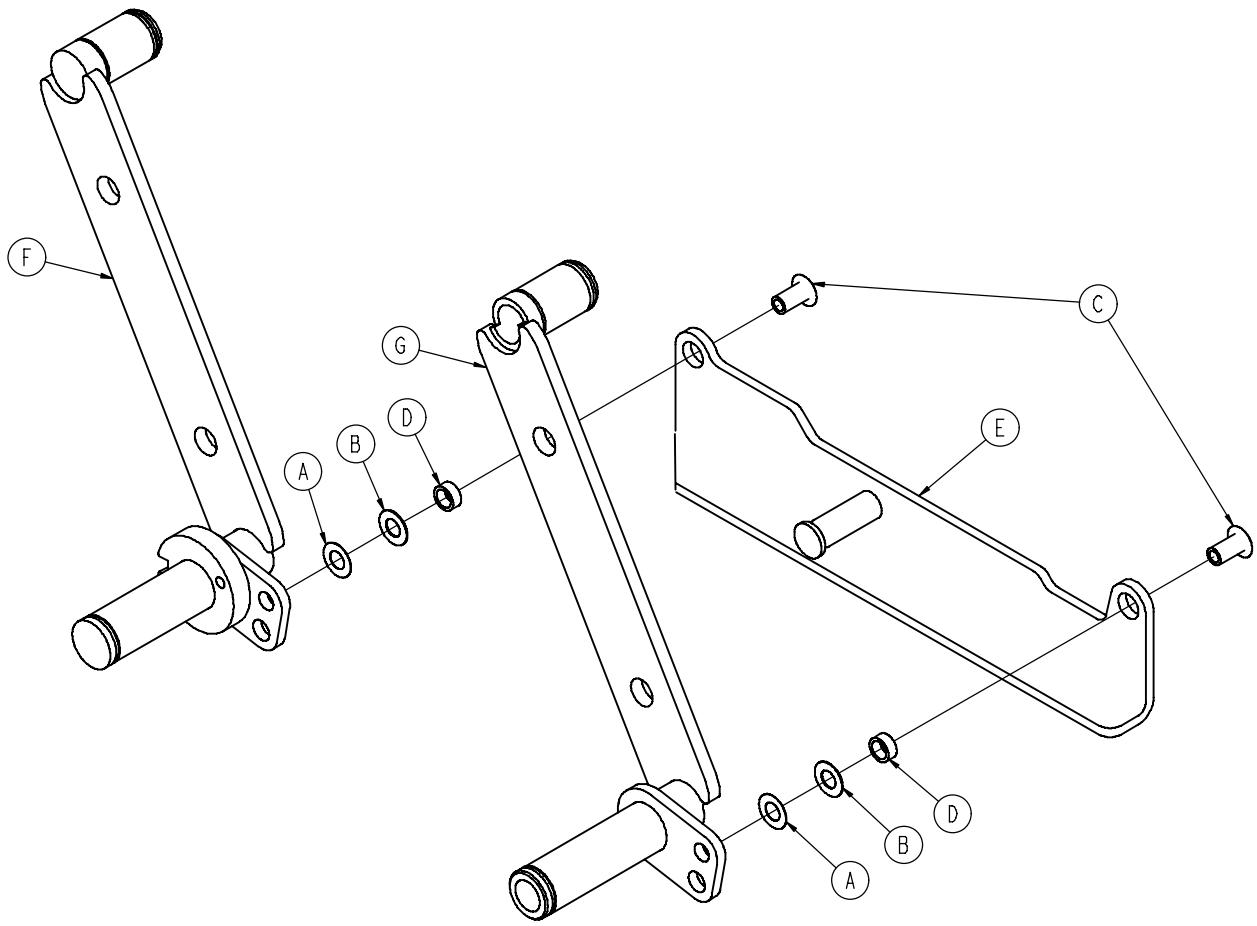

Item	Part No.	Part Name	Qty.
A	0011−377−000	Washer	2
B	0011−491−000	Washer	2
C	3001−400−501	Siderail Linkage Rivot	2
D	3003−401−001	Bushing	2
E	3003−402−117	Timing Link	1
F	3003−402−227	Arm Weldment − LHF	1
G	3003−402−228	Arm Weldment − LHH	1

3003−400−070 Head End Siderail Latch Assembly, Left

(Outside the U.S. and Canada)

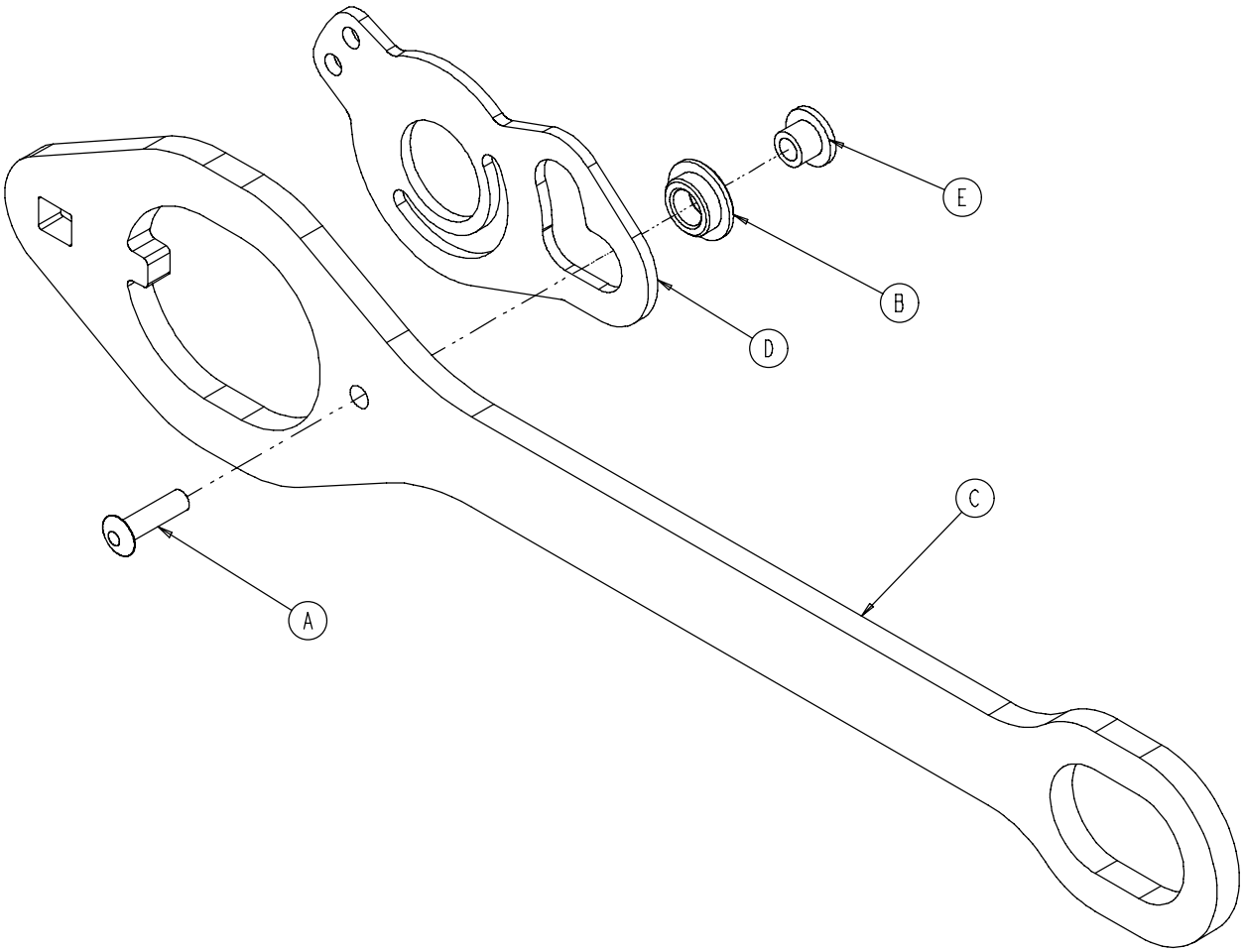

Item	Part No.	Part Name	Qty.
A	25−86	Blind Rivet	1
B	81−317	Bronze Bushing	1
C	3002−400−501	Latch	1
D	3002−400−503	Head End Bypass Plate	1
E	3002−400−509	Bypass Bushing Spacer	1

3002−400−75 Siderail Latch Assembly, Head End, Right

(Outside the U.S. and Canada)

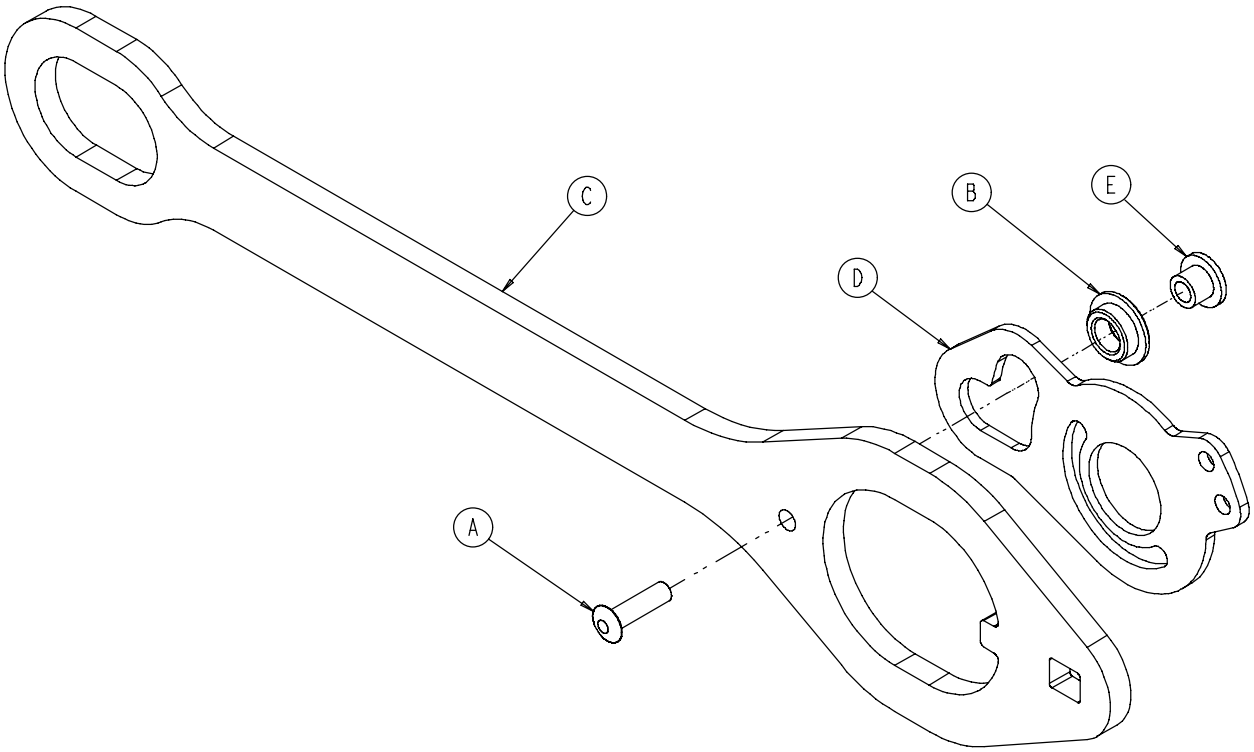

Item	Part No.	Part Name	Qty.
A	25−86	Blind Rivet	1
B	81−317	Bronze Bushing	1
C	3002−400−501	Latch	1
D	3002−400−503	Head End Bypass Plate	1
E	3002−400−509	Bypass Bushing Spacer	1

Return to Table of Contents

3003−400−070 Siderail Latch Assembly, Head End, Left

(Inside the U.S. and Canada)

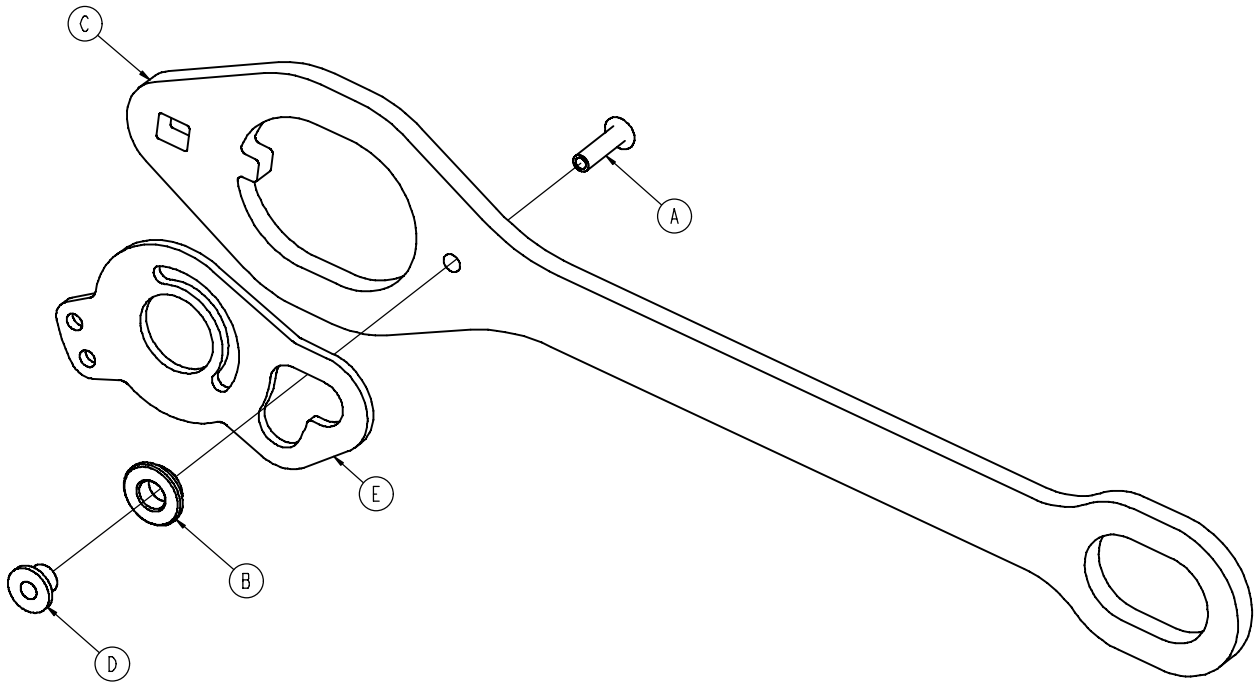

Item	Part No.	Part Name	Qty.
A	25−86	Blind Rivet	1
B	81−317	Bronze Bushing	1
C	3002−400−501	Latch	1
D	3002−400−509	Bypass Bushing Spacer	1
E	3003−400−503	Head End Bypass Plate	1

3003−400−75 Siderail Latch Assembly, Head End, Right

(Inside the U.S. and Canada)

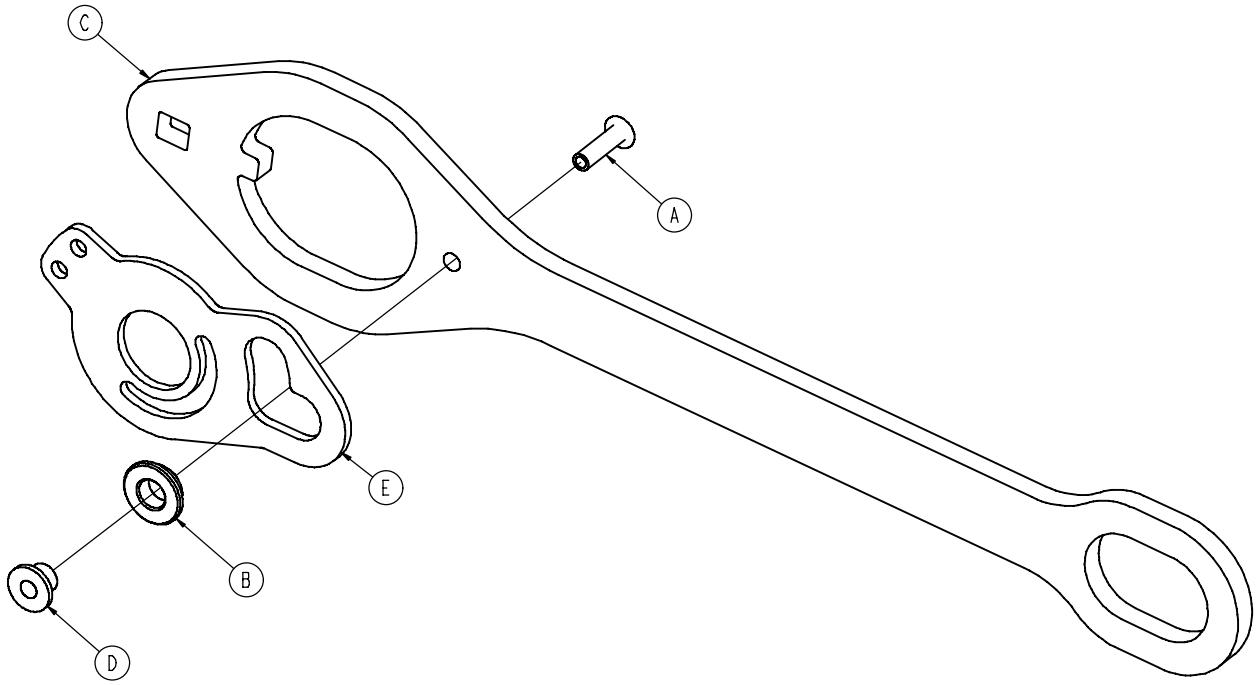

Item	Part No.	Part Name	Qty.
A	25−86	Blind Rivet	1
B	81−317	Bronze Bushing	1
C	3002−400−501	Latch	1
D	3002−400−509	Bypass Bushing Spacer	1
E	3003−400−503	Head End Bypass Plate	1

Siderail Bypass Detent Clip Assembly

Assembly part number 3002−400−90 (reference only)

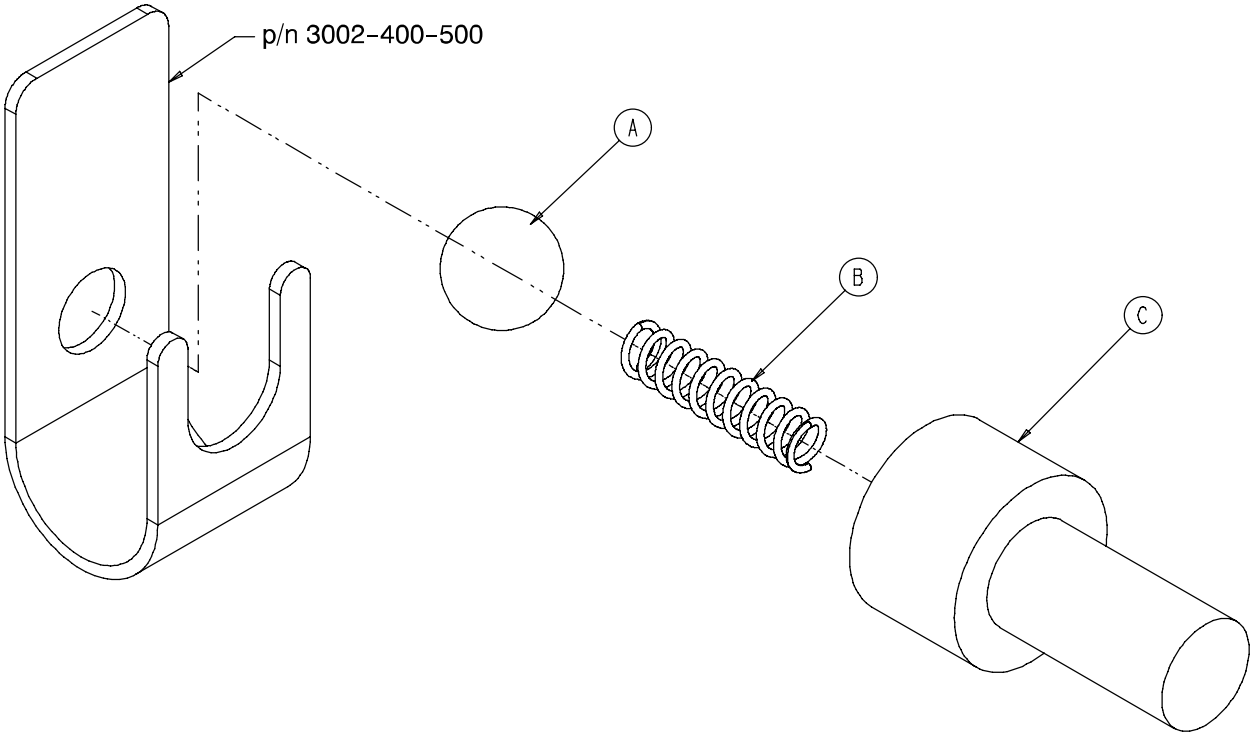

Item	Part No.	Part Name	Qty.
A	31−137	Steel Ball	1
B	38−464	Compression Spring	1
C	3002−400−524	Bypass Detent Housing	1

Head End Outer Siderail Panel Assembly

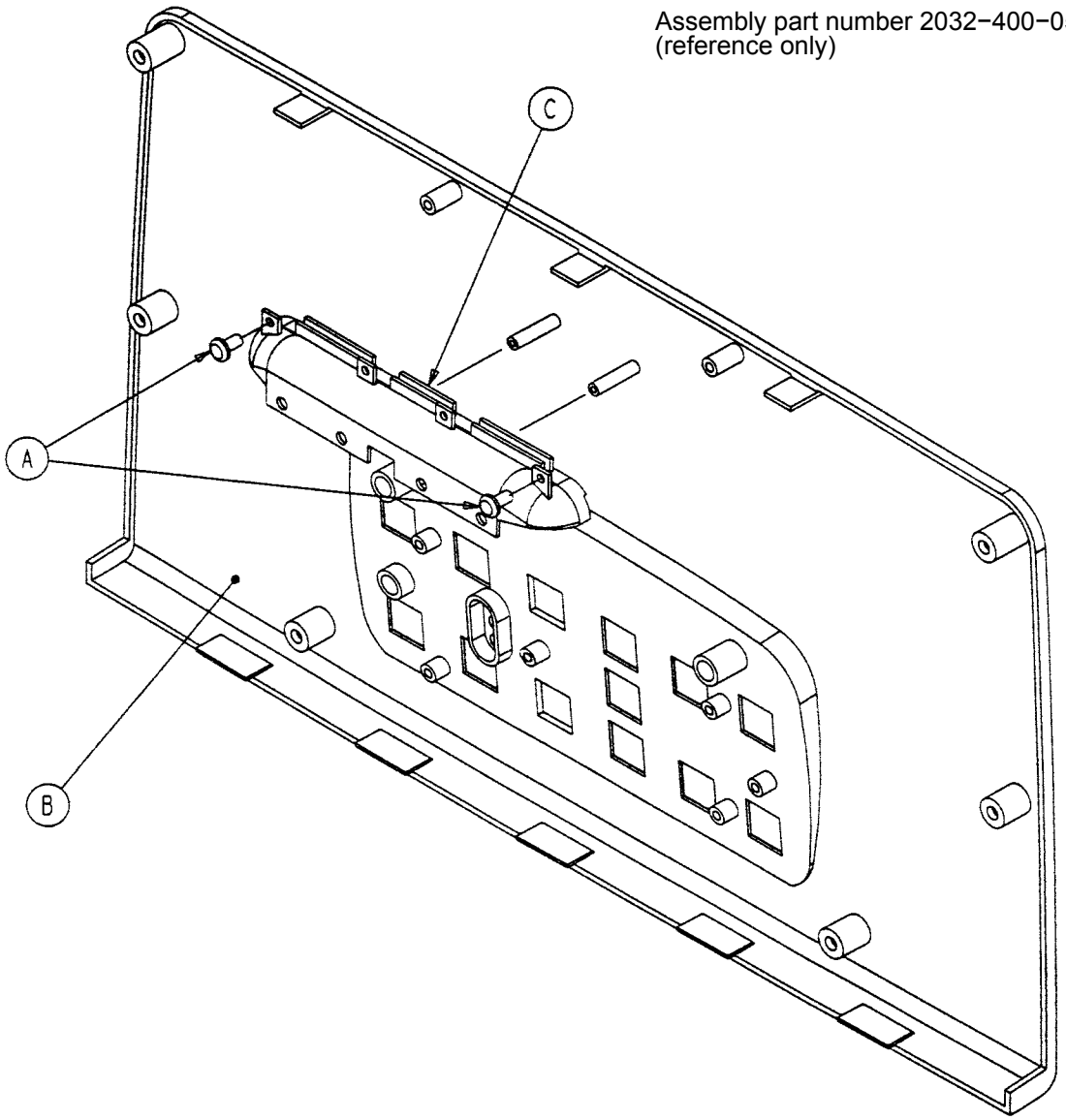

Item	Part No.	Part Name	Qty.
A	23−112	Hi−Low Tapping Screw	2
B	2035−400−102	Outer Panel	1
C	3001−400−599	Handle Insert	1

Head End Siderail Inner Panel Assembly

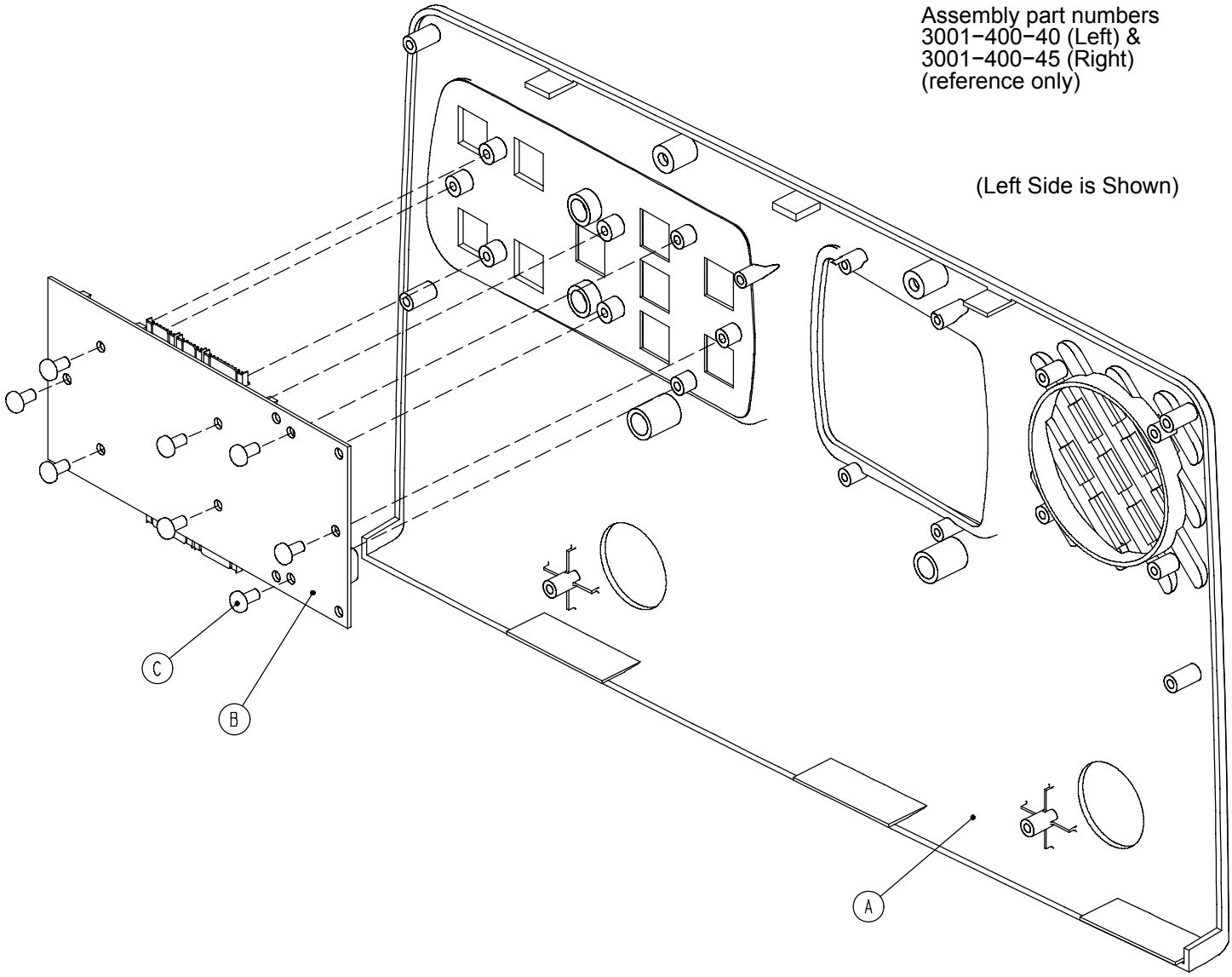

Item	Part No.	Part Name	Qty.
A	3001−400−101	Left Inner Panel	1
	3001−400−201	Right Inner Panel	1
B	3001−400−900	Inner Siderail PCB Assembly	1
C	23−112	Hi−Low Tapping Screw	8

Foot End Siderail Assembly

(Inside the U.S. and Canada)

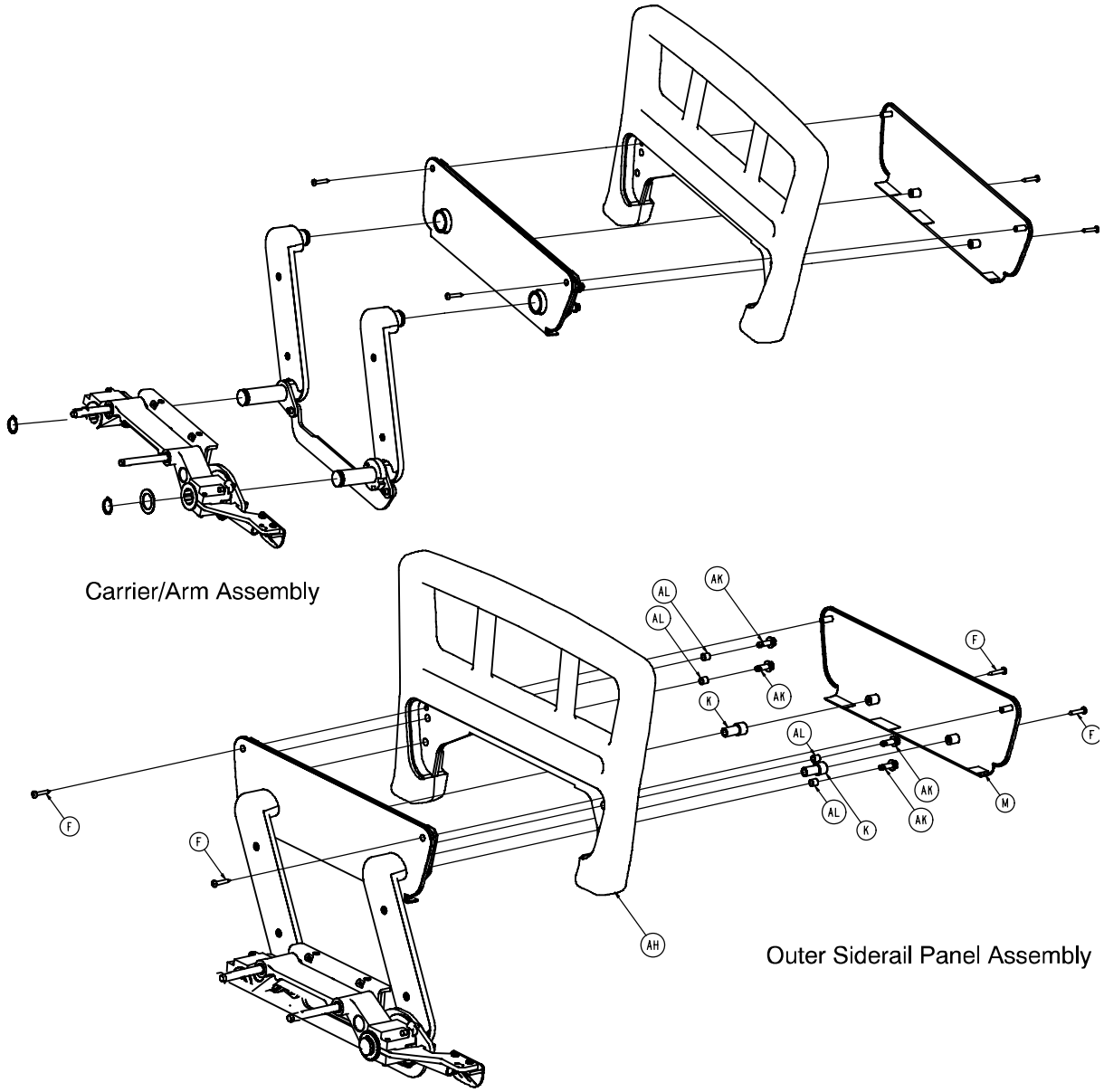

Foot End Siderail Assembly

(Inside the U.S. and Canada)

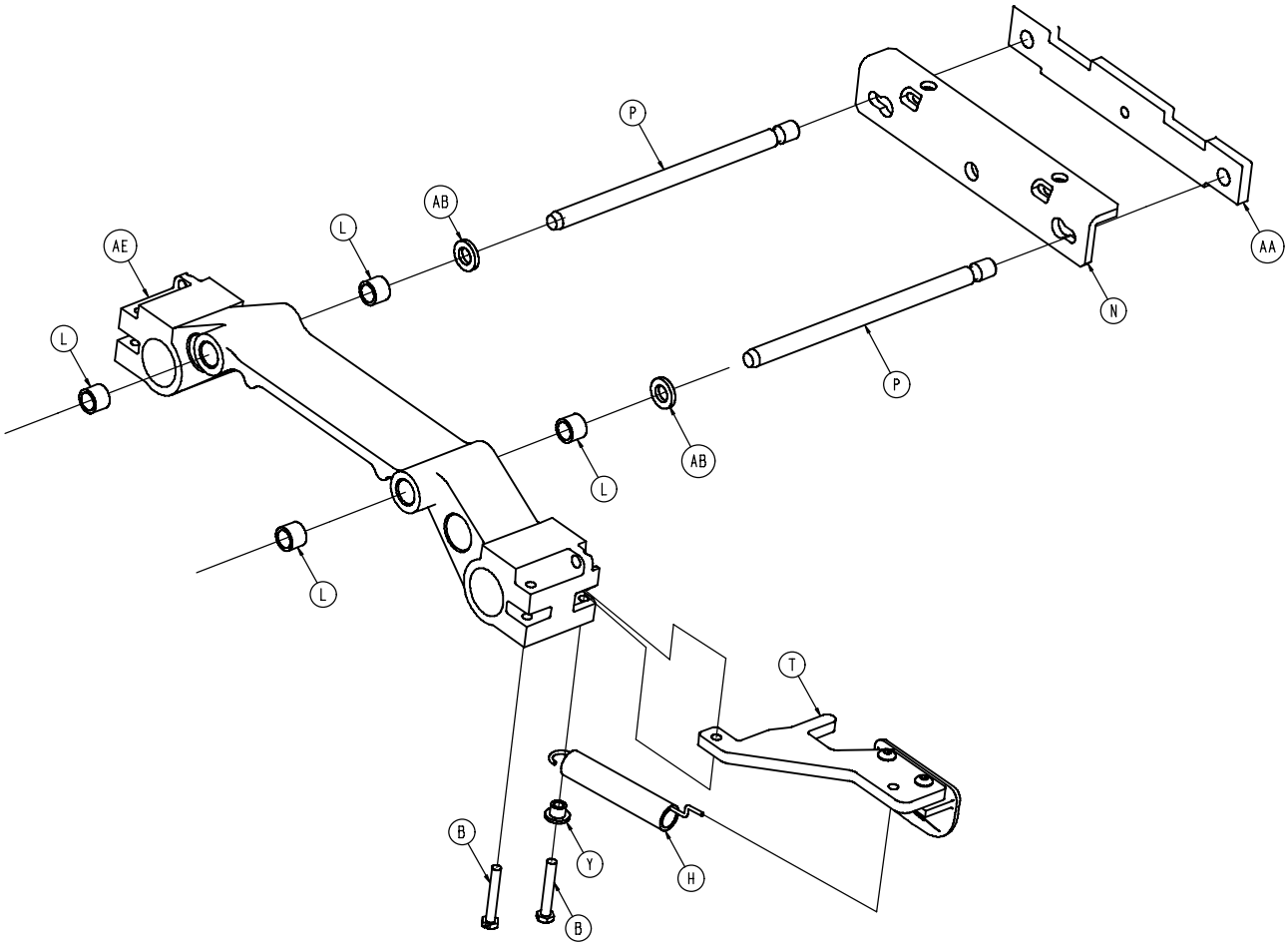

Carrier/Arm Assembly
Left Foot End Siderail Shown

Foot End Siderail Assembly

(Inside the U.S. and Canada)

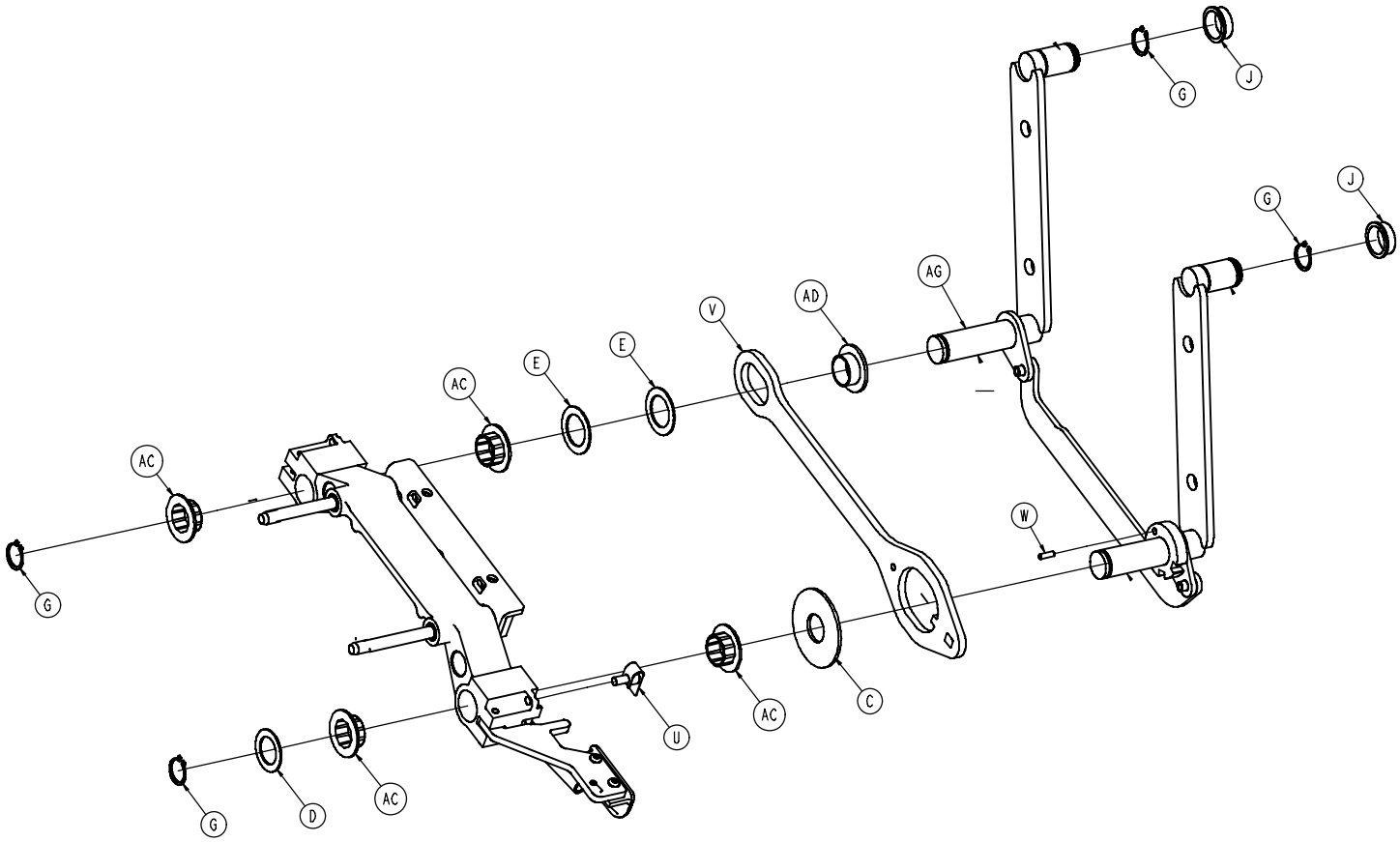

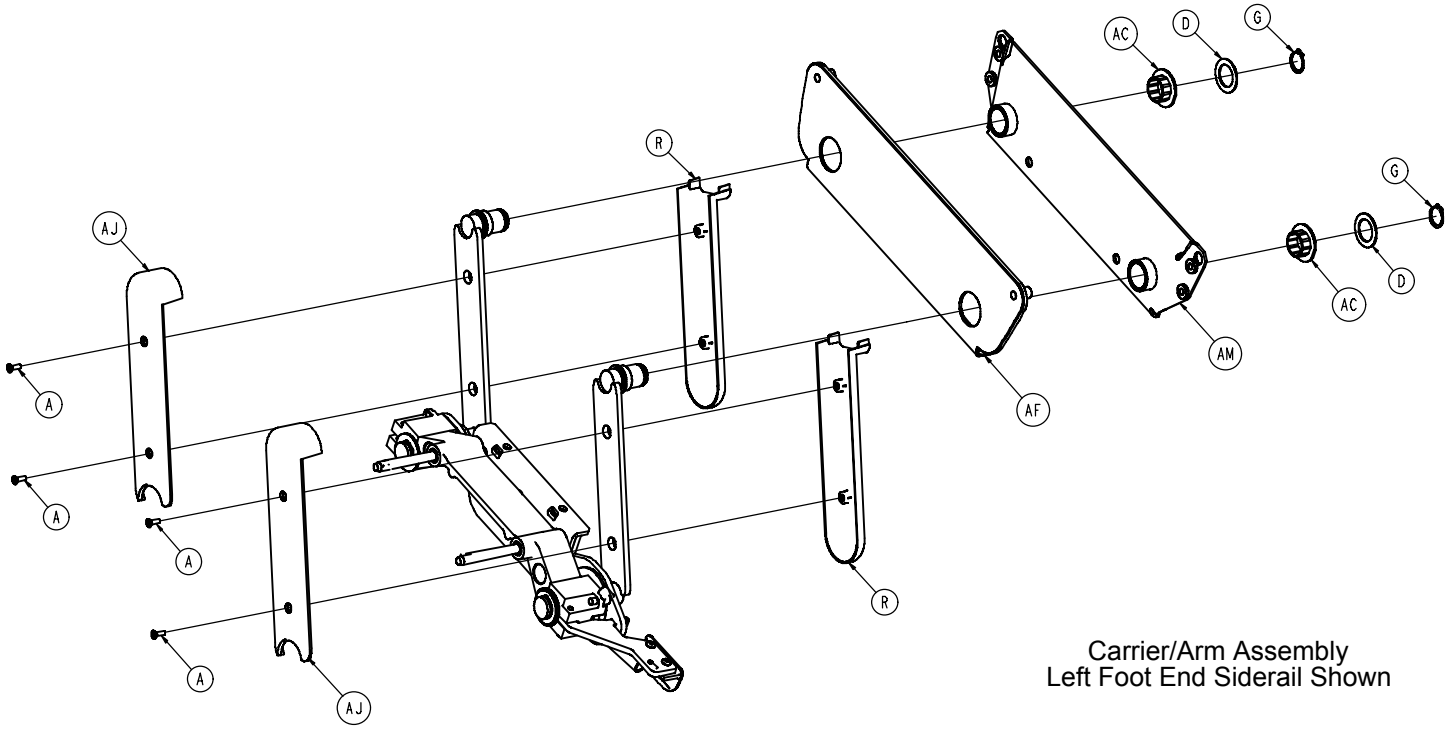

Carrier/Arm Assembly
Left Foot End Siderail Shown

Foot End Siderail Assembly

(Inside the U.S. and Canada)

2032−401−305 Left Common Components

Item	Part No.	Part Name	Qty.
A	1−72	Ph. Flat Hd. Mach. Screw	4
B	3−344	Hex Hd. Cap Screw	2
C	11−185	Washer	1
D	11−343	Shim Washer	3
E	14−93	Washer	2
F	23−90	Pan Hd. Tapping Screw	4
G	28−128	Retaining Ring	6
H	3000−200−334	Extension Spring	1
J	3000−400−513	Wear Bushing	2
K	3000−400−523	Panel Spacer	2
L	3000−400−557	Sleeve Bearing	4
M	3001−400−527	Outer Rail	1
N	3001−400−555	Mounting Bracket	1
P	3001−400−564	Glide Rod	2
R	3001−400−619	Outer Arm Cover	2
T	(page 159)	Release Lever Ass'y, Lt.	1
U	3002−400−090	Ball Detent Clip Ass'y	1
V	3002−400−501	Latch	1
W	3002−400−505	Bypass Pin	1
Y	3002−400−509	Bypass Bushing Spacer	1
AA	3002−400−511	Glide Rod Bumper Pad	2
AB	3002−400−512	Bumper Washer	2
AC	3002−400−513	Pivot Bushing	6
AD	3002−400−519	Latch Bushing	1
AE	3002−400−528	Siderail Carrier	1
AF	3003−400−526	Inner Panel	1
AG	2032−401−30	FE Timing Link Ass'y, LH	1
AH	3003−400−520	Foot Rail	1
AJ	5000−20−5	Inner Arm Cover	2
AK	3−226	Hex Washer Head Screw	4
AL	3001−400−558	Spacer	4
AM	3003−400−580	Weldment, FE Support Plate	1

2032−401−405 Right Common Components

Item	Part No.	Part Name	Qty.
A	1−72	Ph. Flat Hd. Mach. Screw	4
B	3−344	Hex Hd. Cap Screw	2
C	11−185	Washer	1
D	11−343	Shim Washer	3
E	14−93	Washer	2
F	23−90	Pan Hd. Tapping Screw	4
G	28−128	Retaining Ring	6
H	3000−200−334	Extension Spring	1
J	3000−400−513	Wear Bushing	2
K	3000−400−523	Panel Spacer	2
L	3000−400−557	Sleeve Bearing	4
M	3001−400−527	Outer Rail	1
N	3001−400−555	Mounting Bracket	1
P	3001−400−564	Glide Rod	2
R	3001−400−619	Outer Arm Cover	2
T	(page 160)	Release Lever Ass'y, Rt.	1
U	3002−400−090	Ball Detent Clip Ass'y	1
V	3002−400−501	Latch	1
W	3002−400−505	Bypass Pin	1
Y	3002−400−509	Bypass Bushing Spacer	1
AA	3002−400−511	Glide Rod Bumper Pad	2
AB	3002−400−512	Bumper Washer	2
AC	3002−400−513	Pivot Bushing	6
AD	3002−400−519	Latch Bushing	1
AE	3002−400−528	Siderail Carrier	1
AF	3003−400−526	Inner Panel	1
AG	2032−401−30	FE Timing Link Ass'y, LH	1
AH	3003−400−520	Foot Rail	1
AJ	5000−20−5	Inner Arm Cover	2
AK	3−226	Hex Washer Head Screw	4
AL	3001−400−558	Spacer	4
AM	3003−400−580	Weldment, FE Support Plate	1

3002−400−55 Siderail Release Lever Assembly, Left

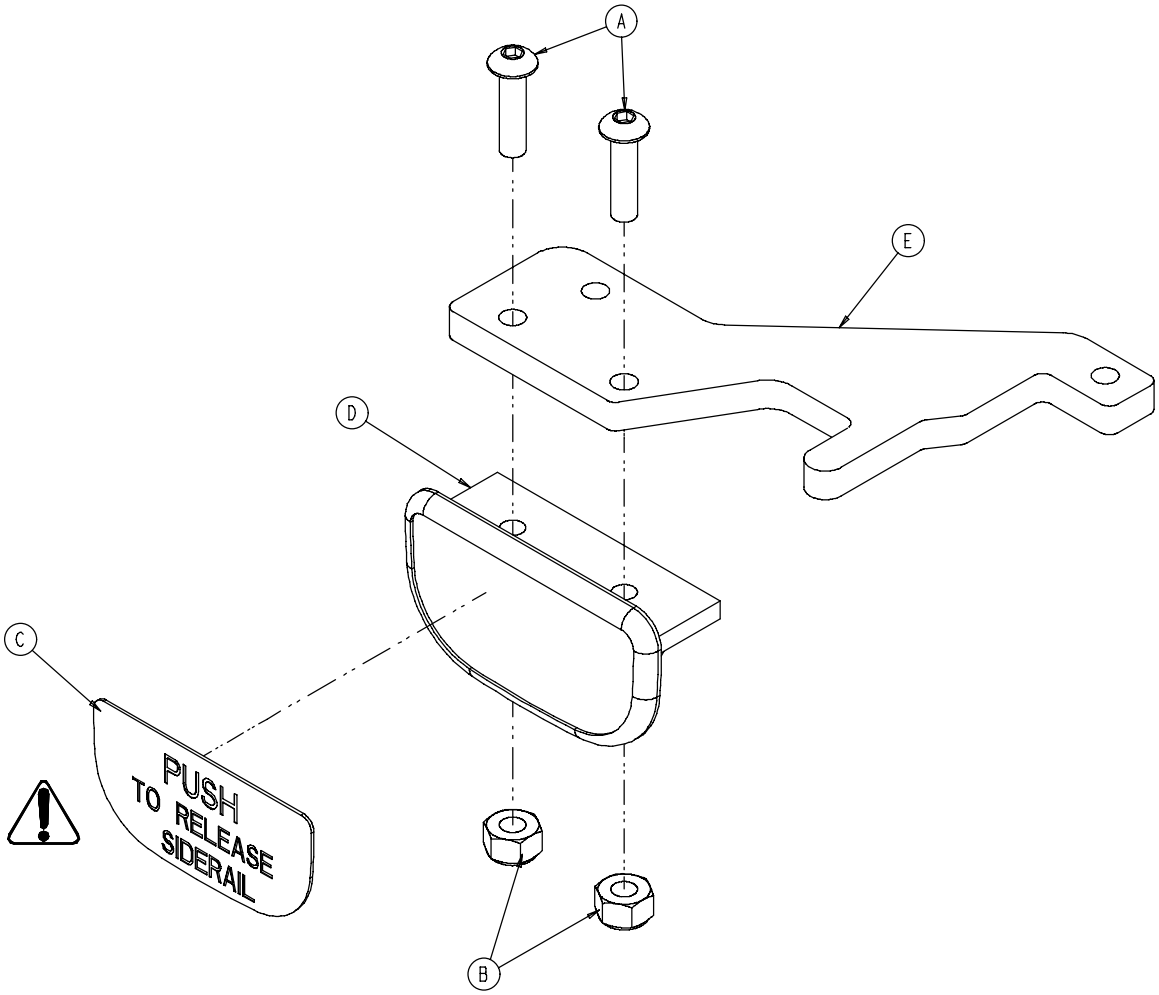

Item	Part No.	Part Name	Qty.
A	4−278	Socket But. Hd. Cap Screw	2
B	16−2	Hex Nut	2
C	3003−503−901	Release Label	1
D	3001−400−514	Release Lever Pad	1
E	3002−400−510	Release Lever	1

3002−400−65 Siderail Release Lever Assembly, Right

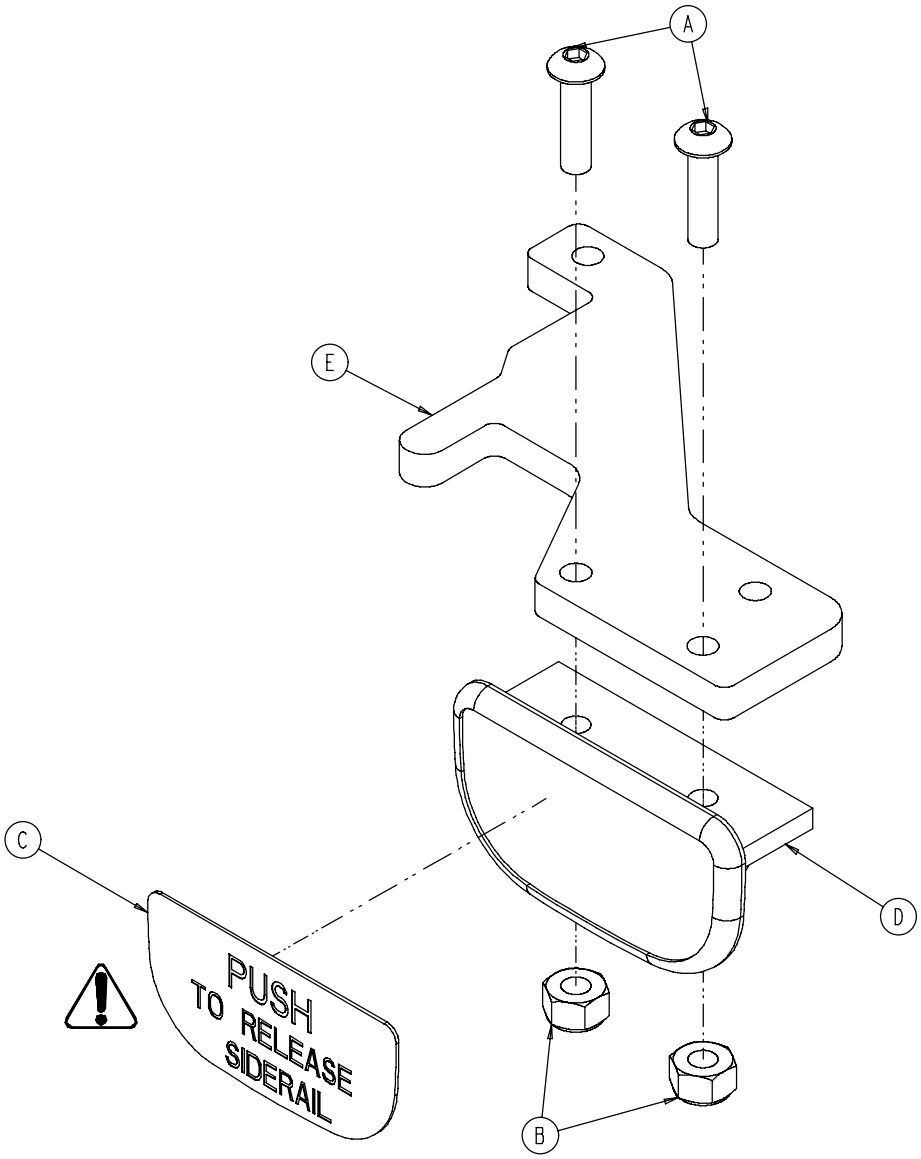

Item	Part No.	Part Name	Qty.
A	4−278	Socket But. Hd. Cap Screw	2
B	16−2	Hex Nut	2
C	3003−503−901	Release Label	1
D	3001−400−514	Release Lever Pad	1
E	3002−400−510	Release Lever	1

2035−130−10 Head Board Assembly

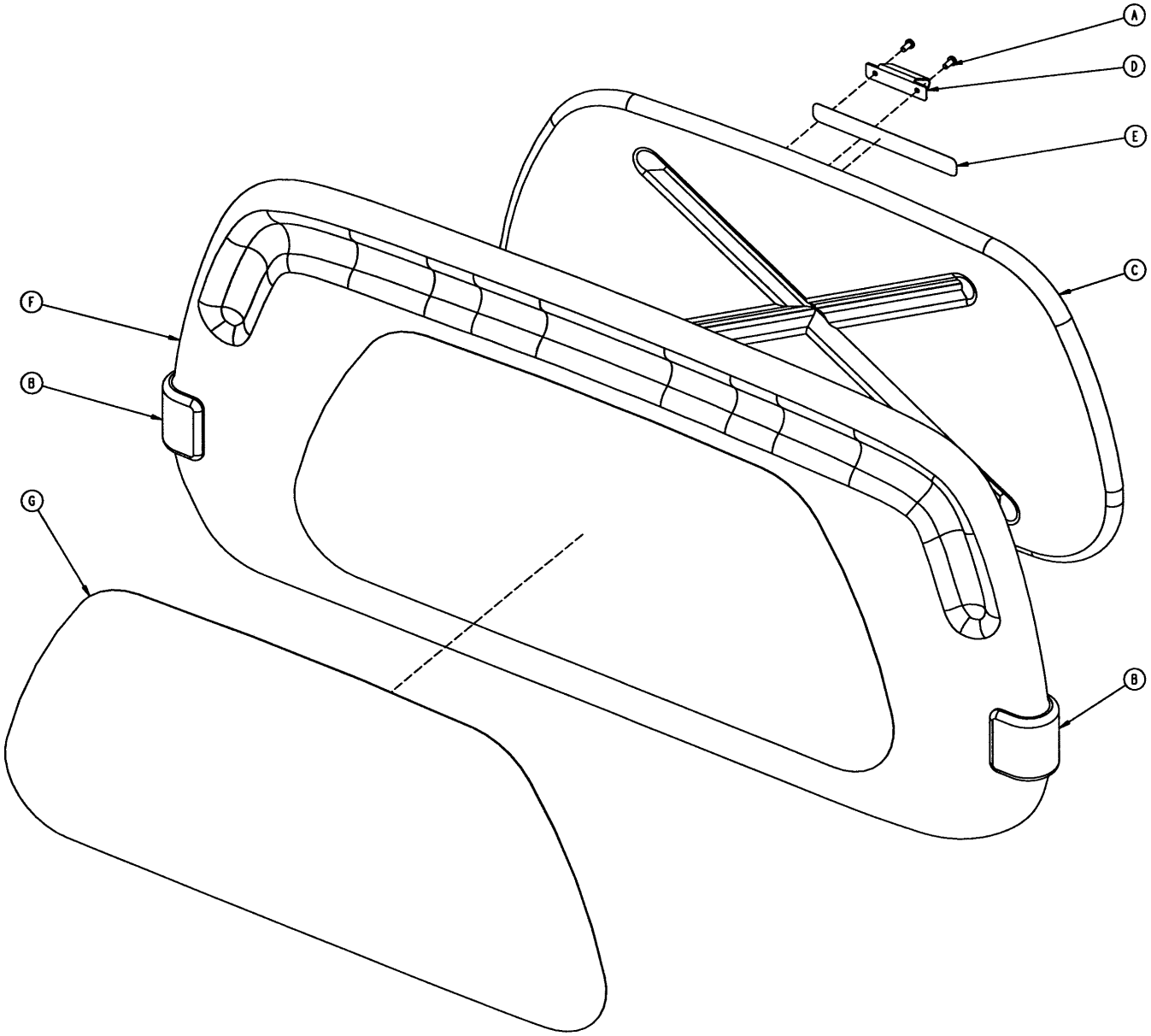

Item	Part No.	Part Name	Qty.
A	23−88	Pan Hd. Screw	2
B	2035−500−7	Dark Blue “C” Bumper	2
C	3000−526−1	CPR Board	1
D	3000−526−2	CPR Board Clip	1
E	3000−526−3	CPR Board Label	1
F	3000−600−10	Head Board Clam Shell Ass’y	1
G	3000−600−56	Beige Head Board Laminate	1
H	72−2−71	“C” Bumper Adhesive	N/A

Foot Board Assembly and Options

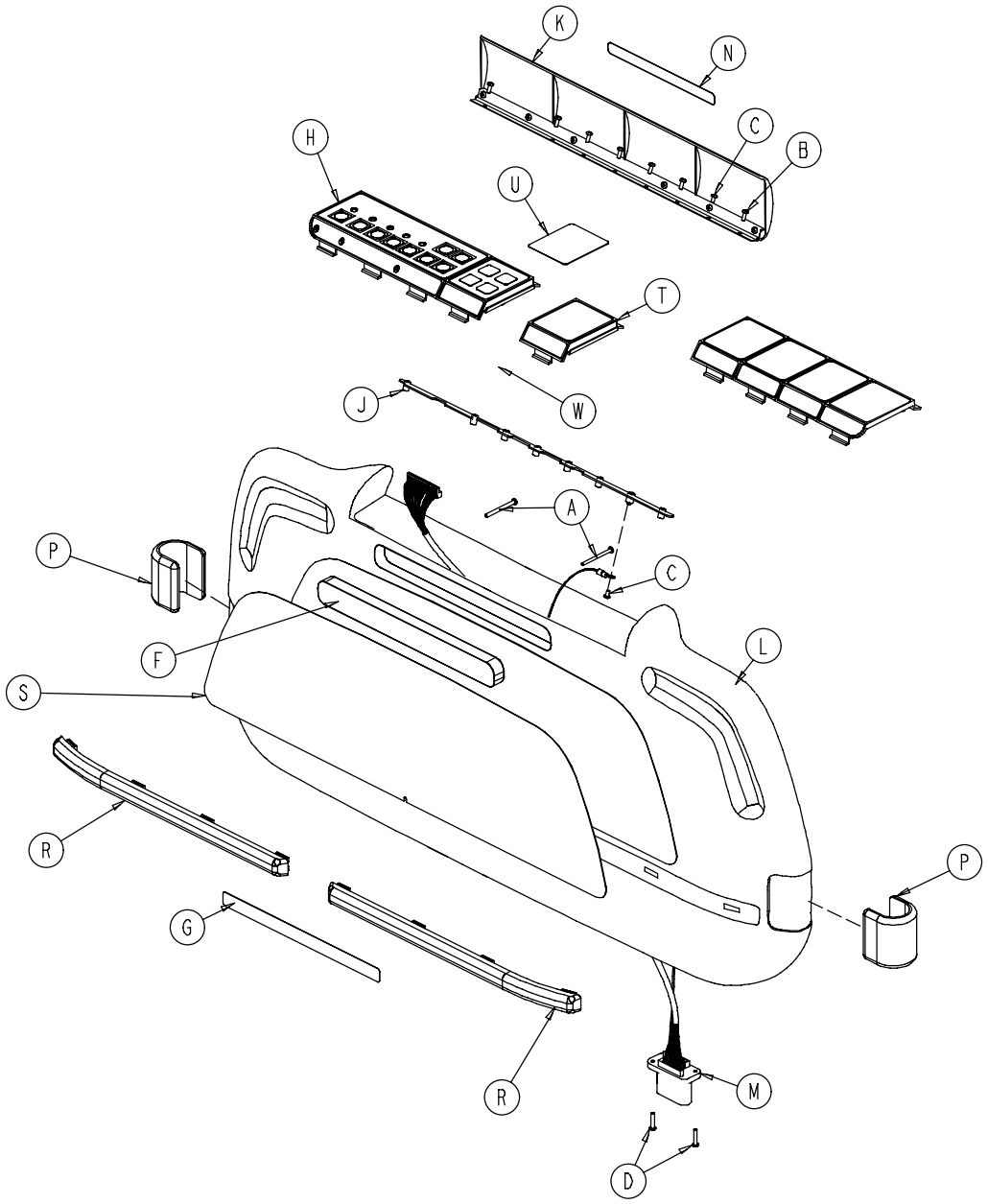

2030−135−10 Foot Board Standard Components

Item	Part No.	Part Name	Qty.	Item	Part No.	Part Name	Qty.
A	23−99	Phil. Pan Hd. Tap. Screw	2	L	3001−500−10	Clamshell Assembly	1
B	23−103	Pan Hd. Hi/Lo Tap. Screw	7	M	3001−500−801	Foot Board Drawer Cable	1
C	50−38	Pan Hd. Mach. Screw	2	N	3000−500−25	Lid Label	1
D	50−39	Pan Hd. Mach. Screw	2	P	2035−500−7	Blue “C” Bumper	2
E	72−2−71	“C” Bumper Adhesive	.30	R	2035−500−8	Strip Bumper	2
F	3000−500−8	Chart Rack Cover	1	S	3000−500−56	Beige Laminate	1
G	3000−500−29	Hazard Label	1	T	(page 170)	E−Drop/Card. Ch. Module	1
H	(page 169)	Main Module	1	U	2035−000−155	E−Drop/Card. Ch. Label	1
J	3001−500−64	Hinge Plate	1	W	2025−136−801	E−Drop/Card. Ch. Cable	1
K	3001−500−1	Lid Assembly	1				

Foot Board Assembly and Options

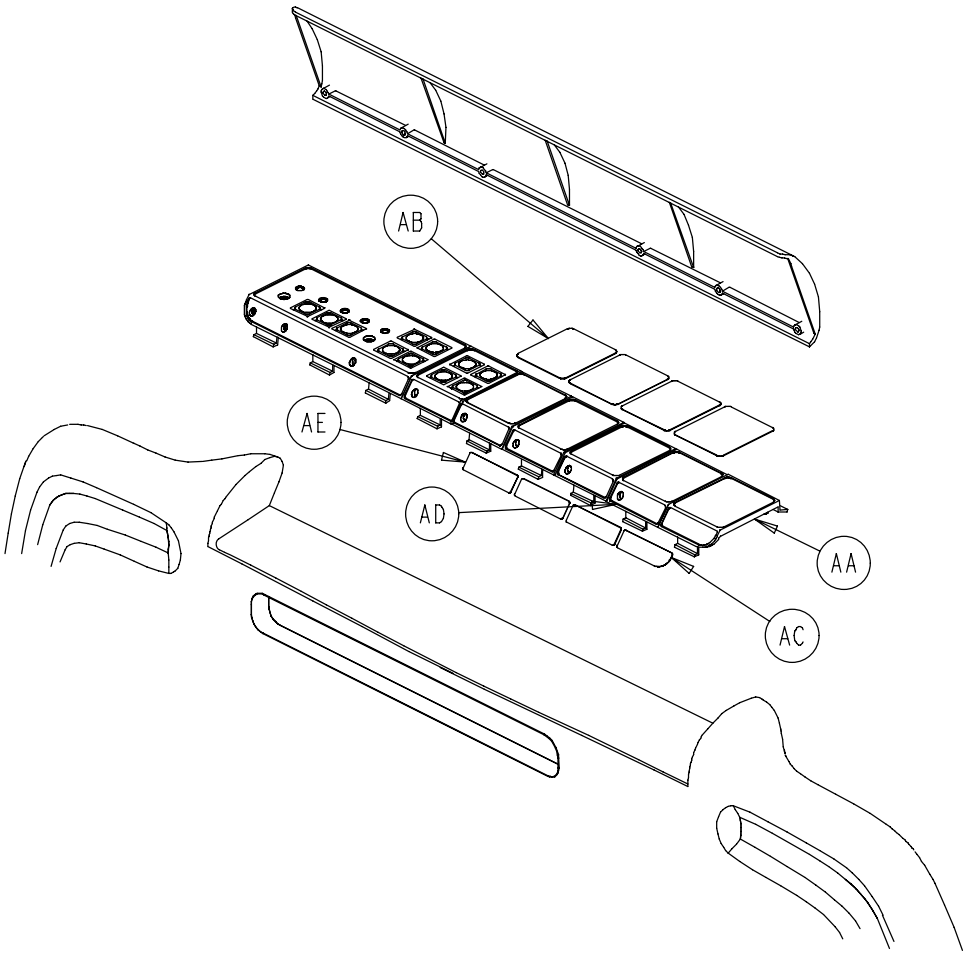

2030−135−11 Foot Board No Scale/No Bed Exit Option

Item	Part No.	Part Name	Qty.
AA	3000−500−4	End Module	1
AB	2035−500−101	Foot Board Blank Label	4
AC	3000−500−27	Blank End Label	1
AD	3001−500−3	Blank Module	3
AE	3000−500−26	Blank Module Label	3

Foot Board Assembly and Options

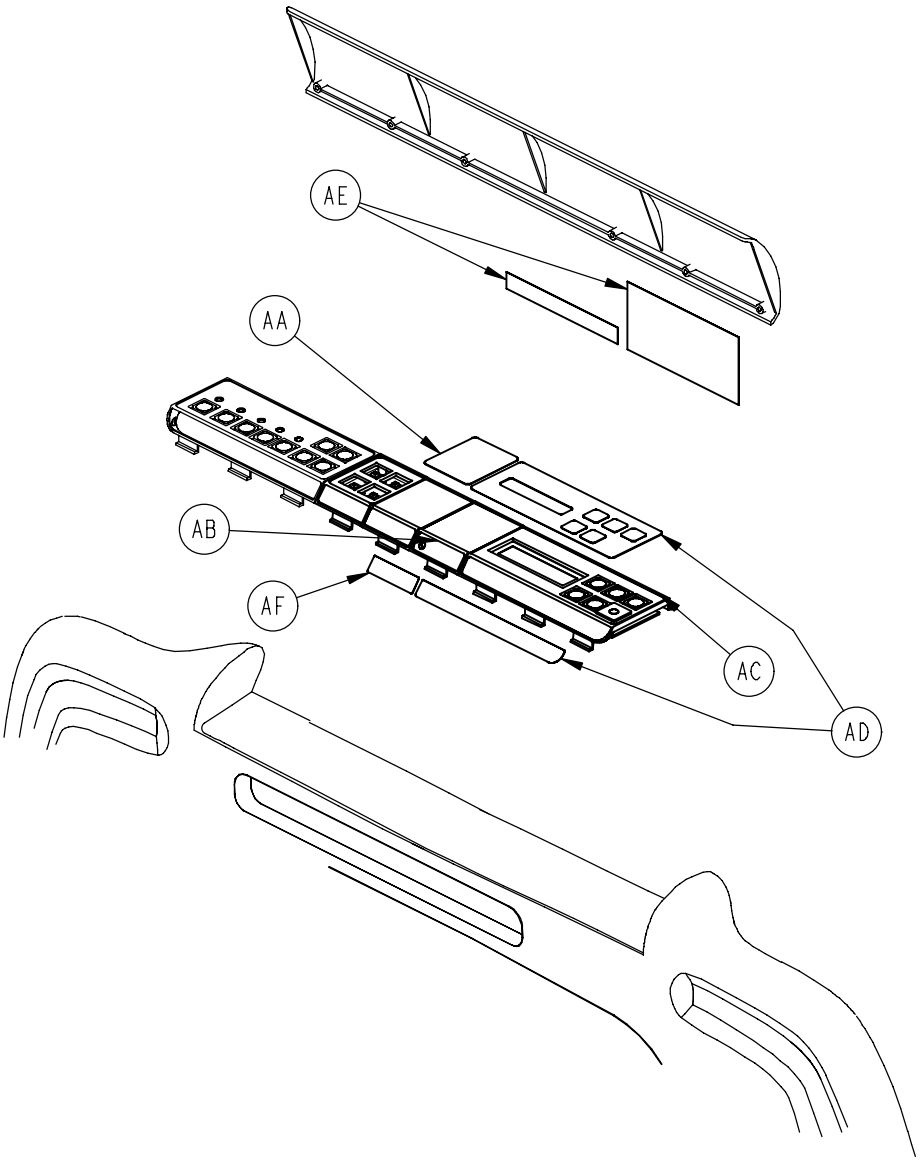

2030−15−13 Foot Board Scale Option

Item	Part No.	Part Name	Qty.
AA	2035−500−101	Foot Board Blank Label	1
AB	3001−500−3	Blank Module	1
AC	(page 173)	Scale Module Assembly	1
AD	2030−000−902	Scale Module Label	1
AE	3002−507−11	Scale Lid Label	1
AF	3000−500−26	Blank Label	1

Foot Board Assembly and Options

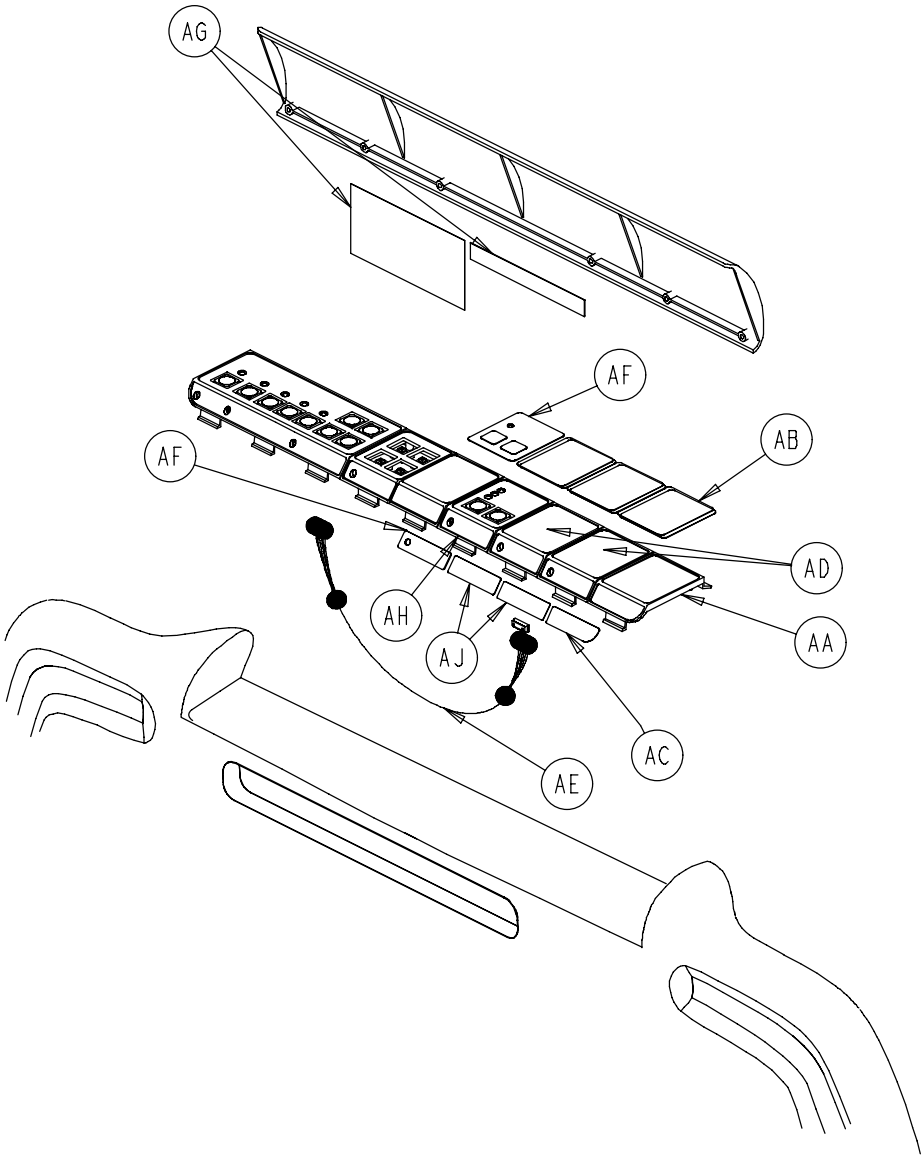

2030−135−12 Foot Board Chaperone™ Option

Item	Part No.	Part Name	Qty.
AA	3000−500−4	End Module	1
AB	2035−500−101	Foot Board Blank Label	3
AC	3000−500−27	Blank End Label	1
AD	3001−500−3	Blank Module	2
AE	3001−508−800	Bed Exit Keypad Cable	1
AF	2030−000−154	Bed Exit Label	1
AG	3002−508−10	Bed Exit Lid Label	1
AH	(page 171)	Bed Exit Module	1
AJ	3000−500−26	Blank Module Assembly	2

Foot Board Assembly and Options

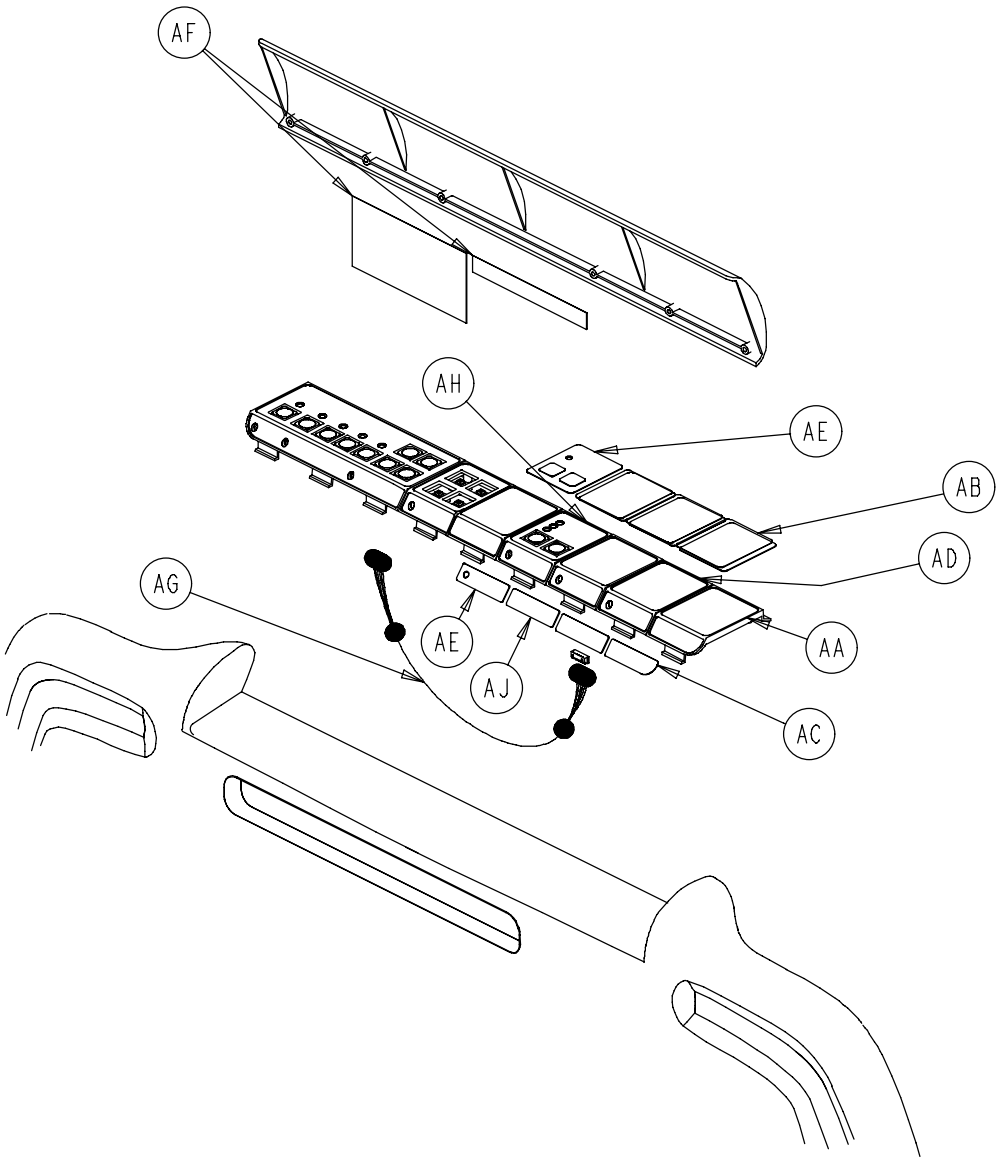

2030−135−15 Foot Board Chaperone™ w/Zone Control Option

Item	Part No.	Part Name	Qty.
AA	3000−500−4	End Module	1
AB	2035−500−101	Foot Board Blank Label	3
AC	3000−500−27	Blank End Label	1
AD	3001−500−3	Blank Module	2
AE	2030−000−156	Chaperone II Module Label	1
AF	3002−508−12	Chaperone II Label	1
AG	3002−508−800	Zone Control Keypad Cable	1
AH	(page 172)	Zone Bed Exit Module	1
AJ	3000−500−26	Blank Module Label	2

Foot Board Assembly and Options

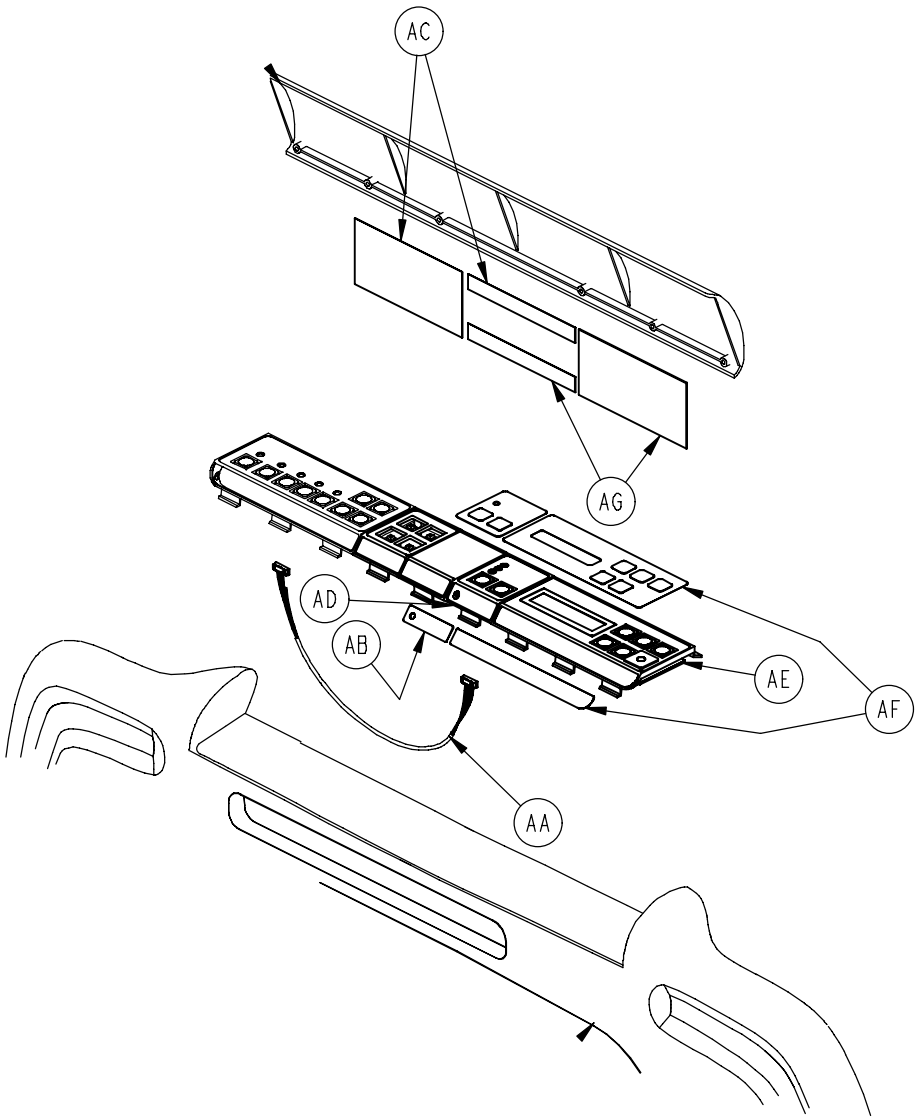

2030−15−14 Foot Board Scale and Chaperone™ Options

Item	Part No.	Part Name	Qty.
AA	3001−508−800	Bed Exit Keypad Cable	1
AB	2030−000−154	Bed Exit Label	1
AC	3002−508−10	Bed Exit Lid Label	1
AD	(page 171)	Bed Exit Module	1
AE	(page 173)	Scale Module	1
AF	2030−000−902	Scale Module Label	1
AG	3002−507−11	Scale Lid Label	1

Foot Board Assembly and Options

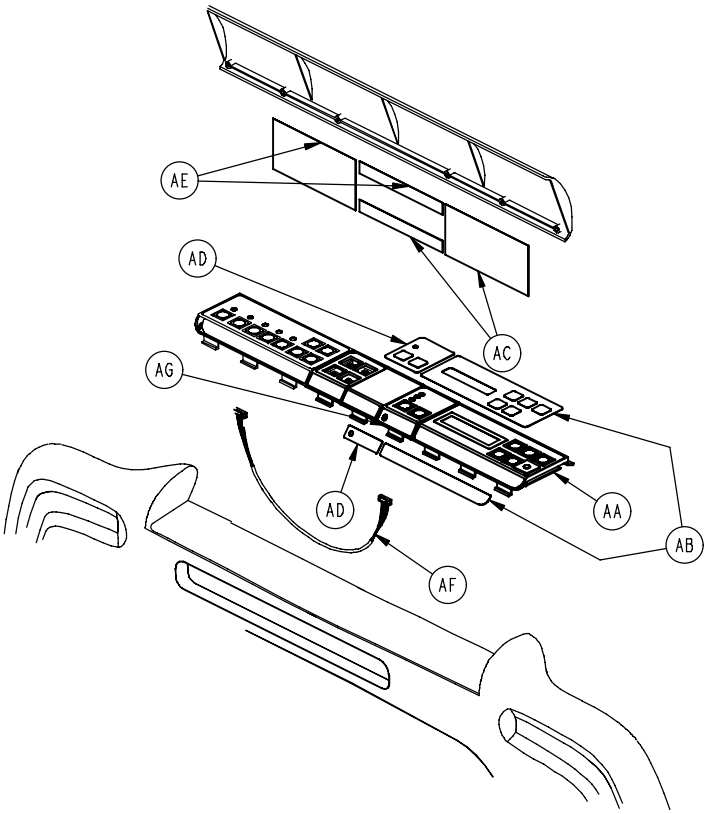

2030−15−16 Foot Board Scale and Chaperone™ w/Zone Control Options

Item	Part No.	Part Name	Qty.
AA	(page 173)	Scale Module Assembly	1
AB	2030−000−902	Scale Module Label	1
AC	3002−507−11	Scale Lid Label	1
AD	2030−000−156	Chaperone II Module Label	1
AE	3002−508−12	Chaperone II Label	1
AF	3002−508−800	Zone Control Keypad Cable	1
AG	(page 172)	Zone Bed Exit Module	1

2030−235−20 Foot Board Main Module Assembly

part number 2030−000−151

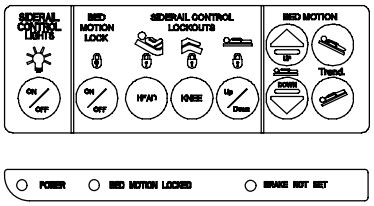

part number 2035−000−153

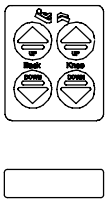

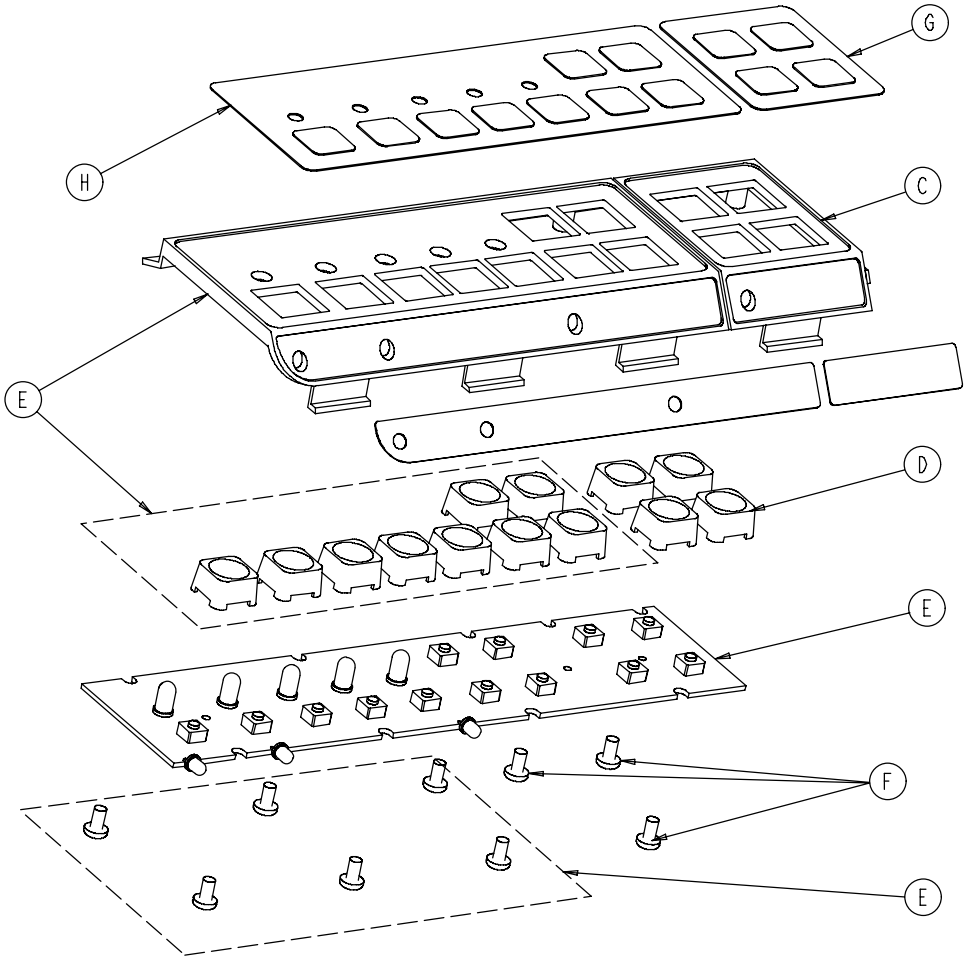

Item	Part No.	Part Name	Qty.
C	3000−501−1	Gatch/Fowler Module	1
D	3001−400−953	Switch Cap	4
E	3001−500−28	Foot Board Std. Module	1
F	23−87	Pan Hd. Tapping Screw	3
G	2035−000−153	Gatch/Fowler Label	1
H	2030−000−151	Foot Board Std. Module Label	1

2025−136−21 Foot Board E. Drop/Cardiac Chair Module

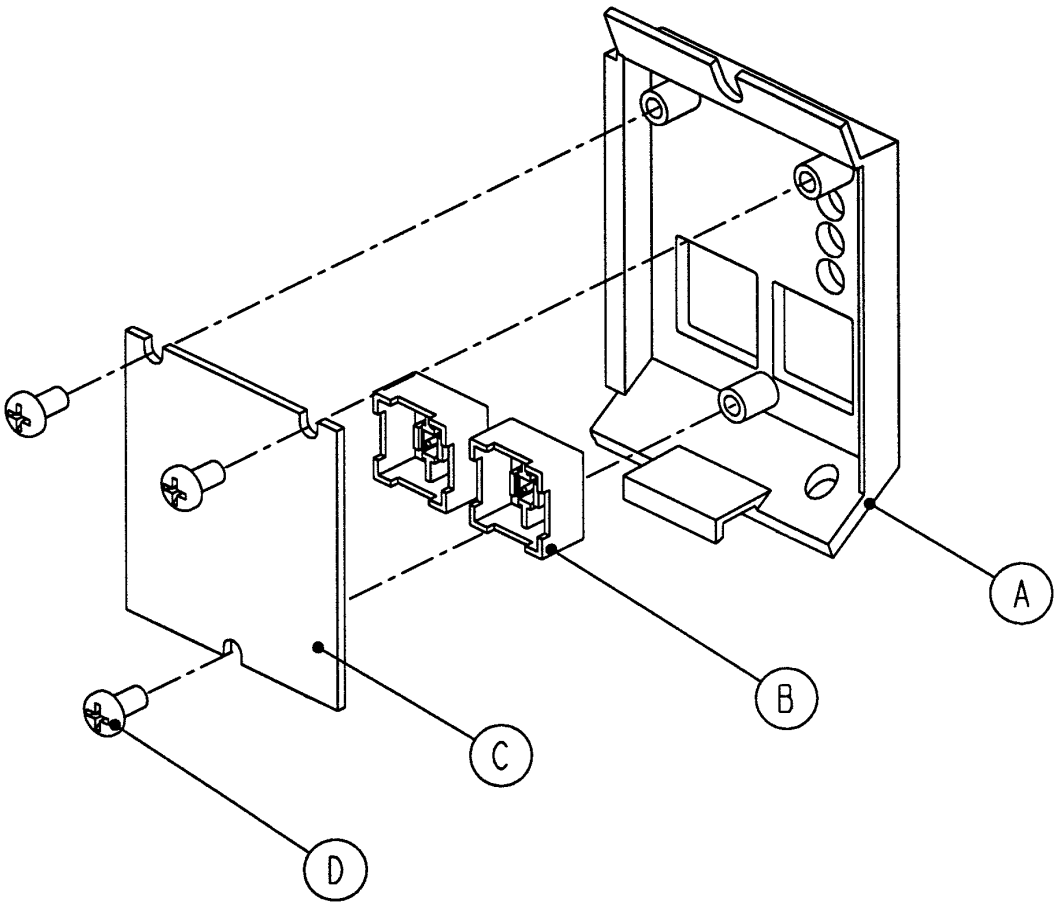

Item	Part No.	Part Name	Qty.
A	3000−508−1	Bed Exit Module Panel	1
B	3001−400−953	Switch Cap	2
C	2025−136−900	CPR Drop/Card. Ch. Keypad	1
D	23−87	Hi−Low Tapping Screw	3

3001−508−30 Foot Board Bed Exit Module

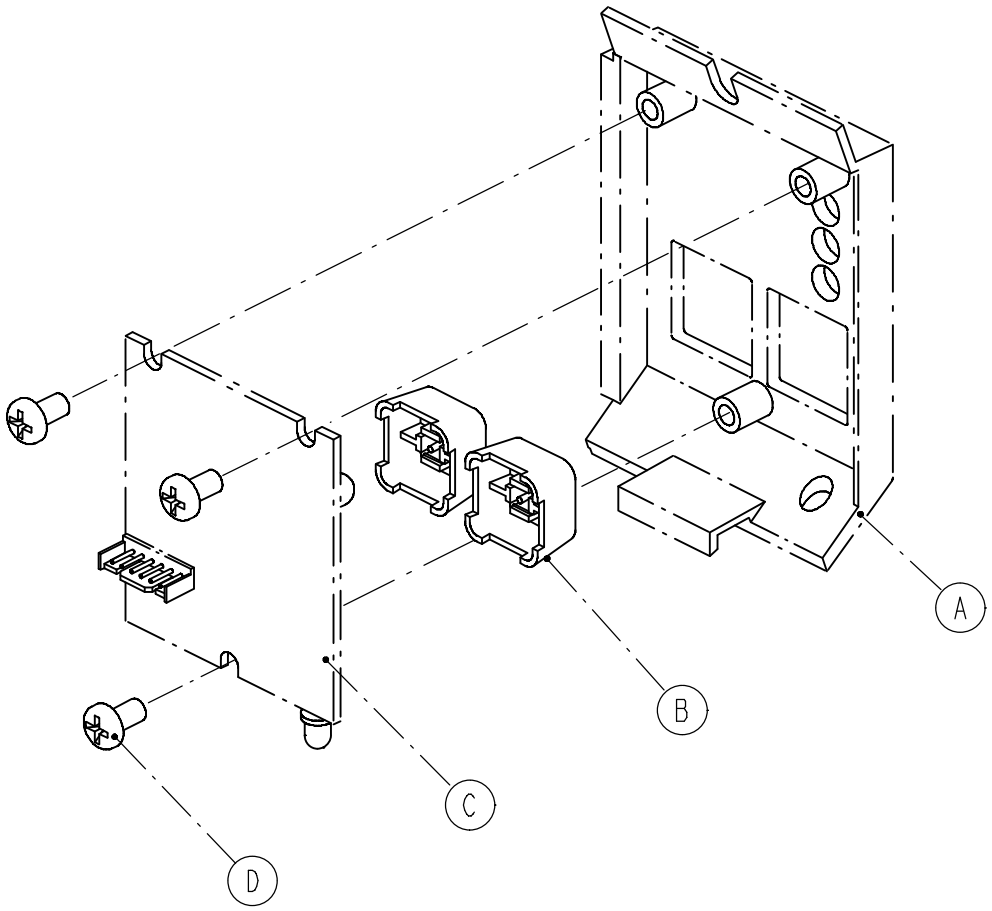

Item	Part No.	Part Name	Qty.
A	3000−508−1	Bed Exit Module Panel	1
B	3001−400−953	Switch Cap	2
C	3001−508−910	Bed Exit Keypad Ass'y	1
D	23−87	Hi−Low Tapping Screw	3

3002−508−30 Foot Board Zone Bed Exit Module

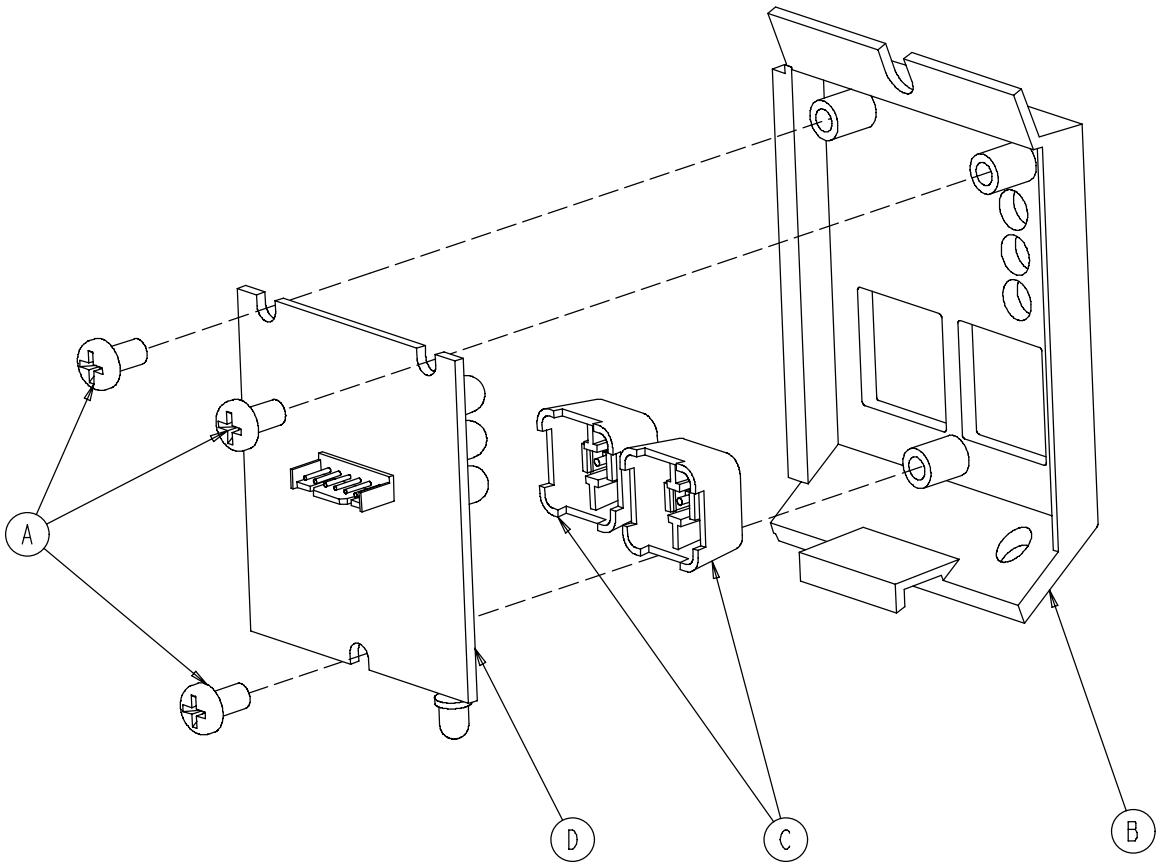

Item	Part No.	Part Name	Qty.
A	23−87	Hi−Low Tapping Screw	3
B	3000−508−1	End Exit Module Panel	1
C	3001−400−953	Switch Cap	2
D	3002−508−900	Bed Exit Board	1

3002−507−30 Foot Board Scale Module Assembly

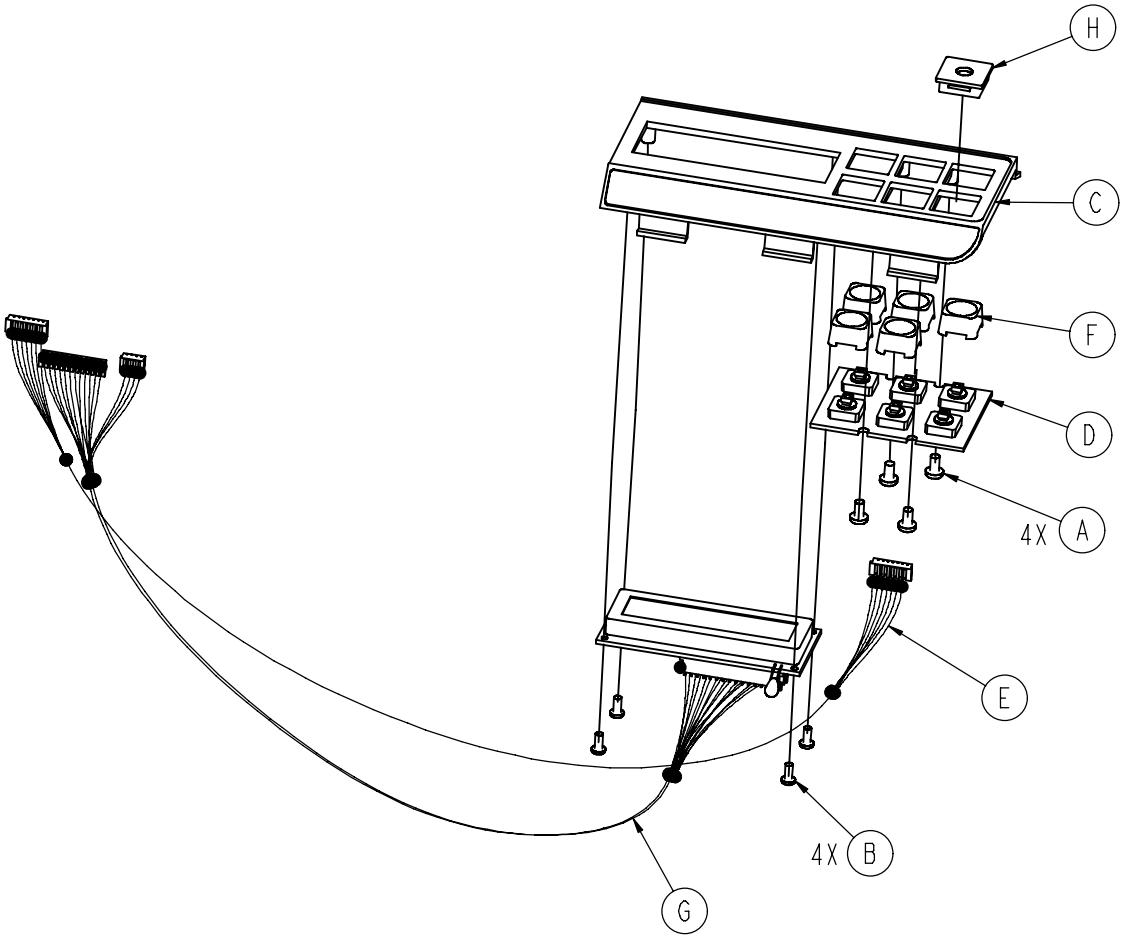

Item	Part No.	Part Name	Qty.
A	23−87	Pan Hd. Hi−Lo Tapping Screw	4
B	23−91	Pan Hd. Hi−Lo Tapping Screw	4
C	3001−507−1	Scale Module	1
D	3001−507−910	Scale Keypad	1
E	3001−507−800	Scale Keypad Cable	1
F	3001−400−953	Switch Cap	5
G	3002−507−900	Scale Display Cable	1
H	3001−400−552	Filler Cap	1

Optional Pendants

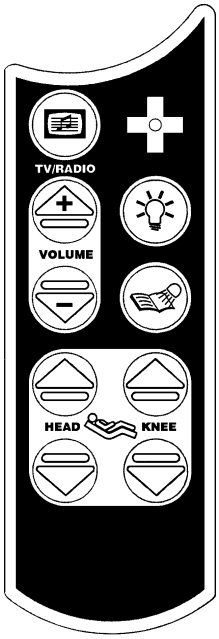

3001−315−12 Combination Pendant Motion/Communication

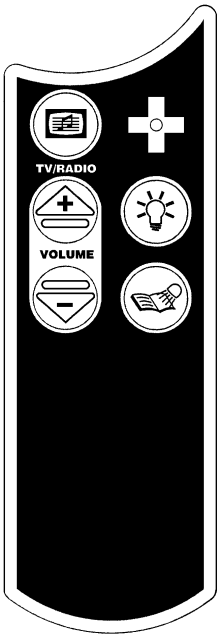

3001−315−16 Combination Pendant Communication Only

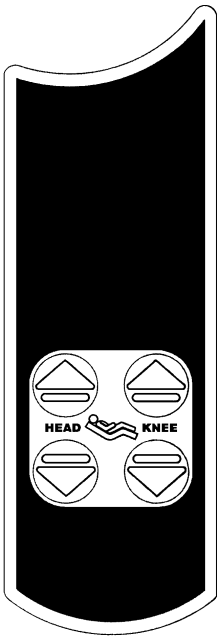

3001−315−14 Combination Pendant Motion Only

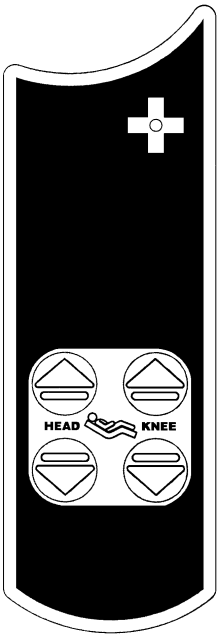

3001−315−18 Combination Pendant Motion/NurseCall

3000−300−80 Removable IV Pole Assembly

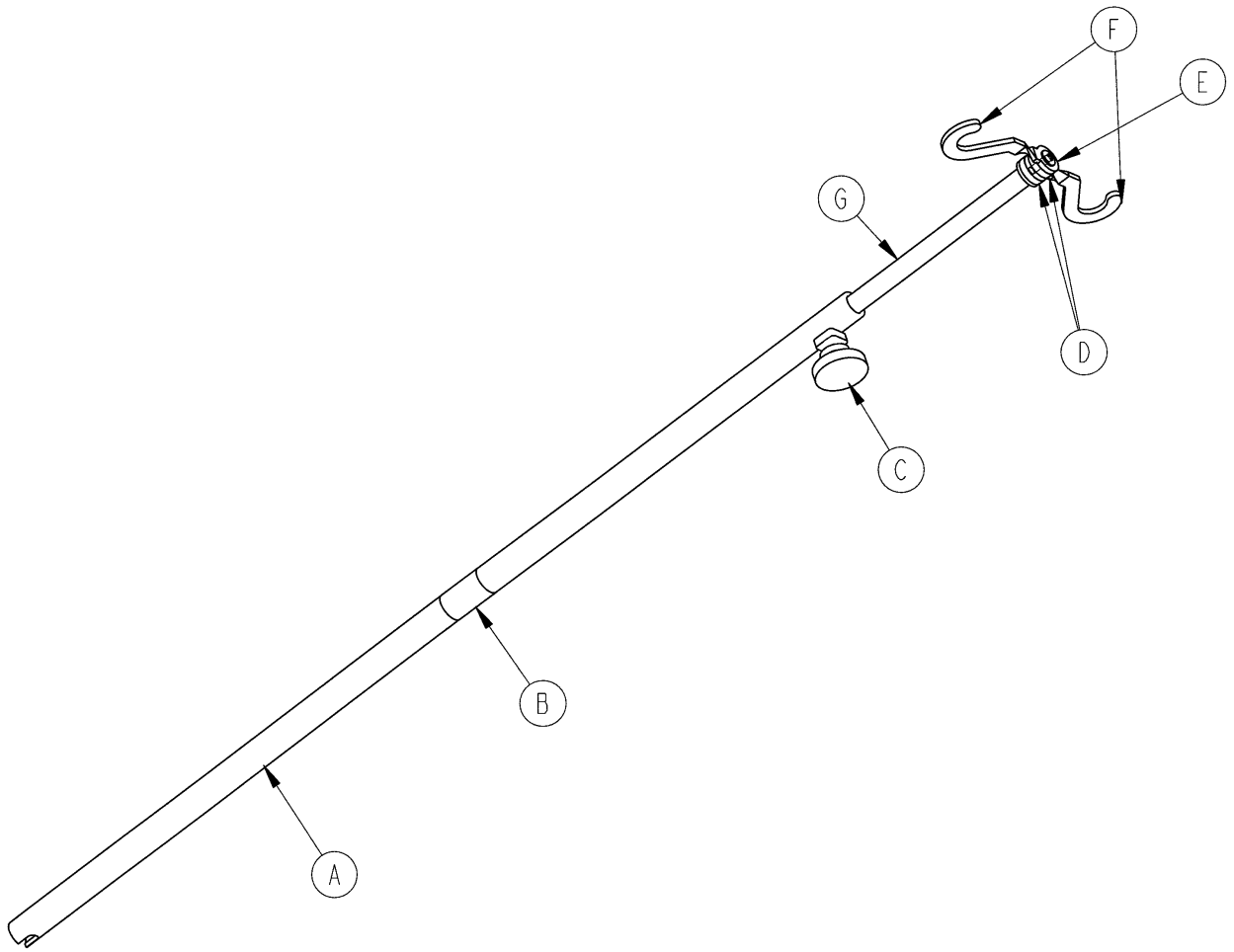

Item	Part No.	Part Name	Qty.
A	3000−300−81	Outer Tube	1
B	3000−300−89	Label	1
C	24−50	Fluted Knob	1
D	52−17	Spacer	2
E	7−40	Phillips Truss Hd. Screw	1
F	1010−59−16	IV Hook	2
G	3000−300−85	Inner Tube Assembly	1

2035−112 Optional Head End 2−Stage IV Assembly

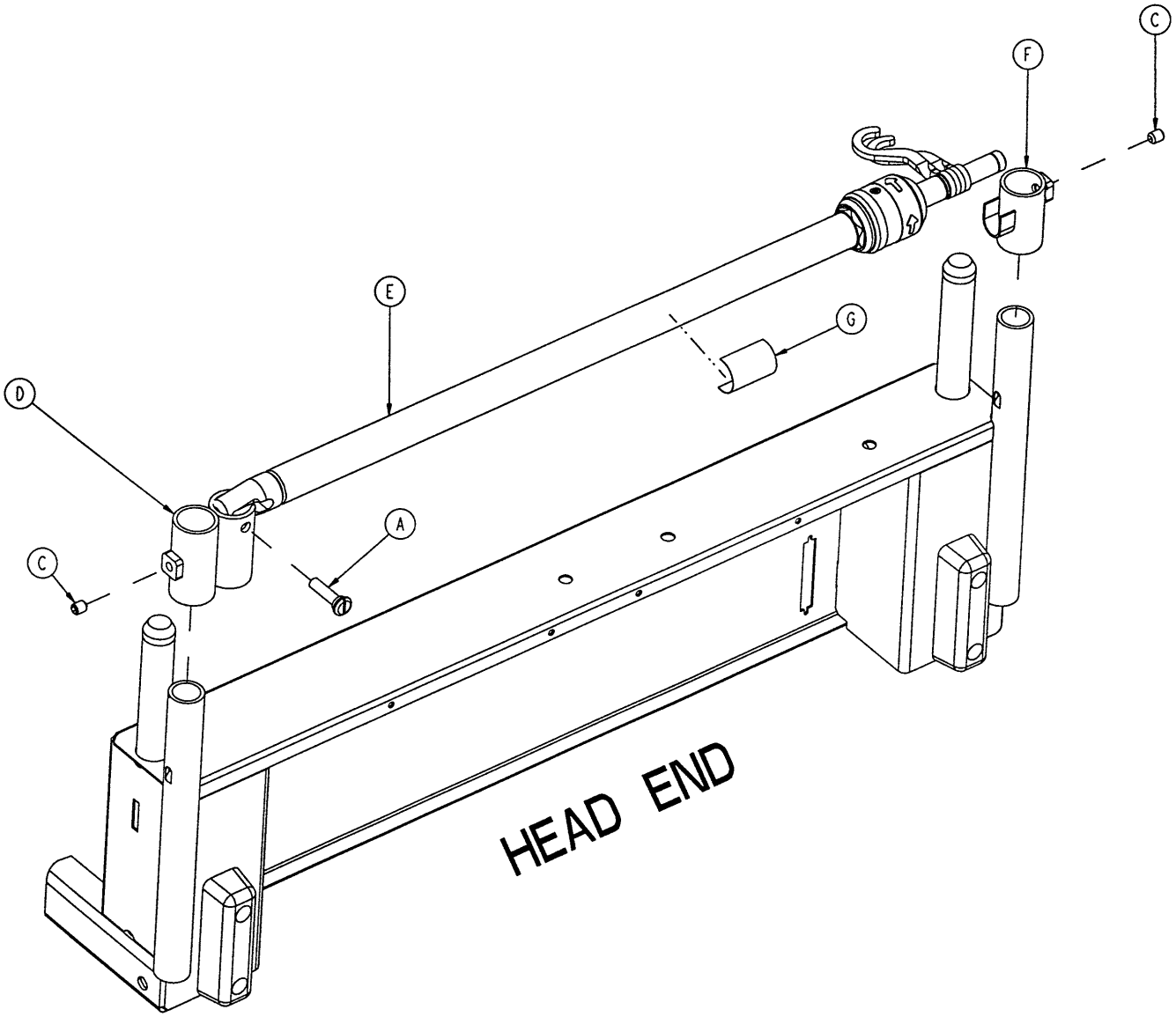

Item	Part No.	Part Name	Qty.
A	1015−24−35	Retaining Pin	1
C	21−140	Set Screw	2
D	2035−112−1	I.V. Receptacle, Head, Left	1
E	(page 178)	I.V. Pole Assembly, Left	1
F	3000−311−16	I.V. Rest	1
G	2035−112−110	Specification Label	1

2035−113 Optional Dual Head End 2−Stage IV Ass'y

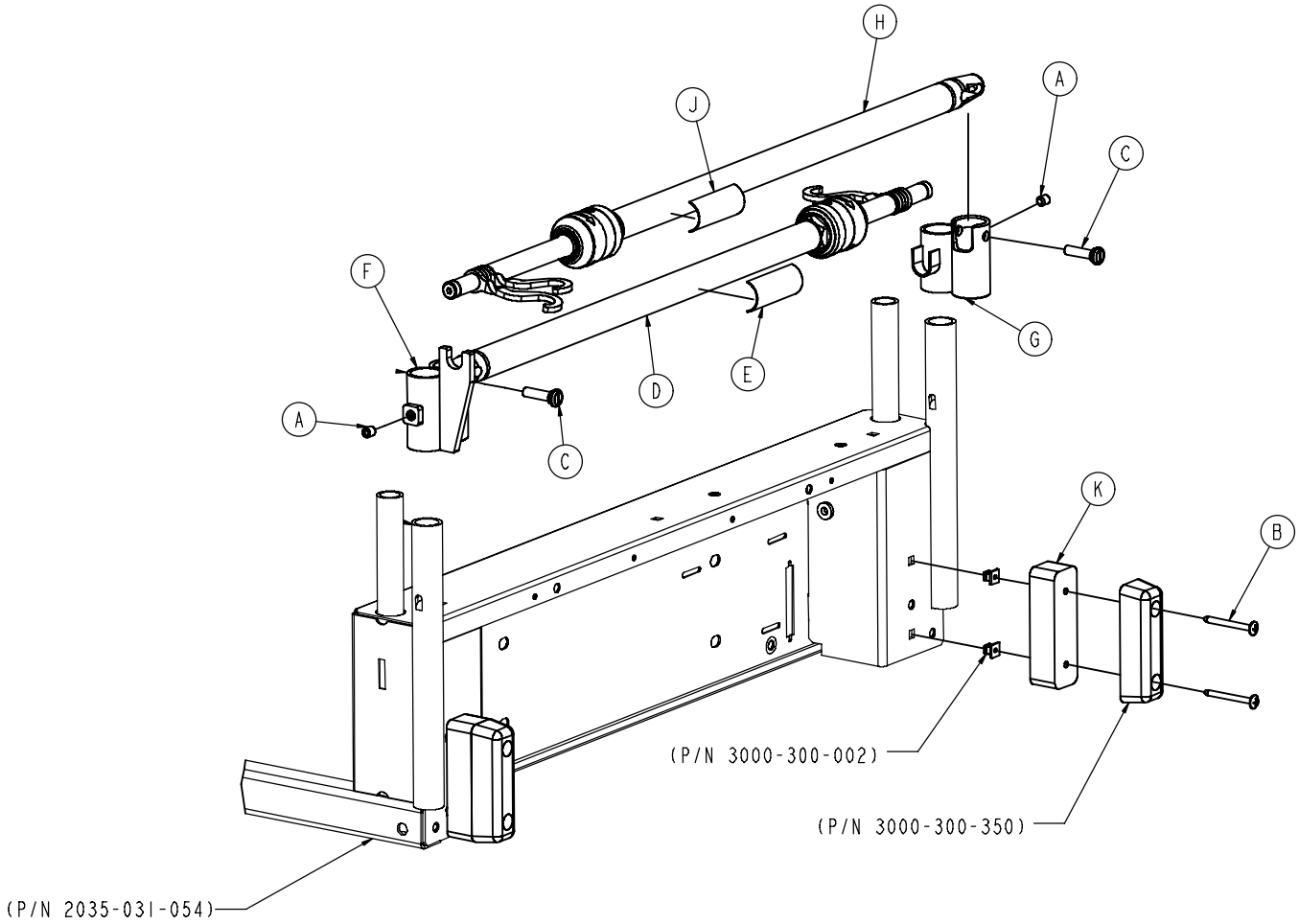

Item	Part No.	Part Name	Qty.
A	21−140	Set Screw	2
B	23−277	Truss Hd. Screw	4
C	1015−24−35	Retaining Pin	2
D	(page 178))	IV Pole Assembly, Left	1
E	2035−112−110	Specification Label	1
F	2035−113−1	IV Receptacle, Dual Head, Lt.	1
G	2035−113−2	IV Receptacle, Dual Head, Rt.	1
H	(page 178))	IV Pole Assembly, Right	1
J	2035−113−111	Specification Label	1
K	2035−113−6	Head End Bumper Spacer	2

2035−112−10 & 2035−113−11 Optional 2−Stage IV Pole

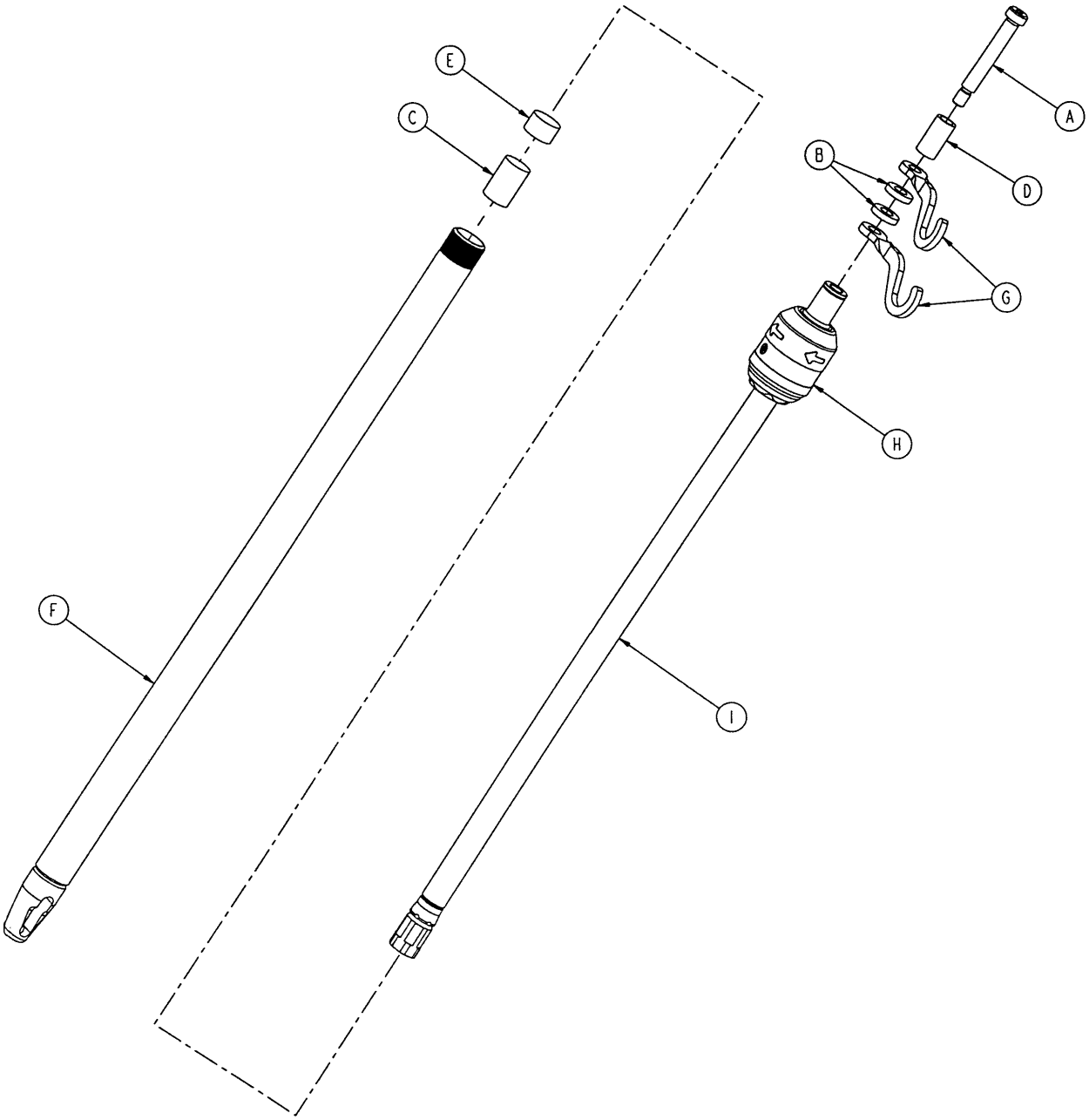

2035−112−10 Head End, Left

Item	Part No.	Part Name	Qty.
A	8−31	Soc. Hd. Shoulder Screw	1
B	52−17	Washer	2
C	52−310	Spacer	1
D	926−400−162	Spacer	1
E	1001−259−13	Dampener	1
F	1001−259−32	Base Tube Weldment	1
G	1010−259−16	IV Hook	2
H	(page 179)	IV Pole Latch	1
I	1211−110−29	2nd Stage Assembly	1

2035−113−11 Foot End, Right

Item	Part No.	Part Name	Qty.
A	8−31	Soc. Hd. Shoulder Screw	1
B	52−17	Washer	2
C	52−311	Spacer	1
D	926−400−162	Spacer	1
E	1001−259−13	Dampener	1
F	1001−259−32	Base Tube Weldment	1
G	1010−259−16	IV Hook	2
H	(page 179)	IV Pole Latch	1
I	1211−110−29	2nd Stage Assembly	1

0785−035−103 IV Pole Latch Assembly

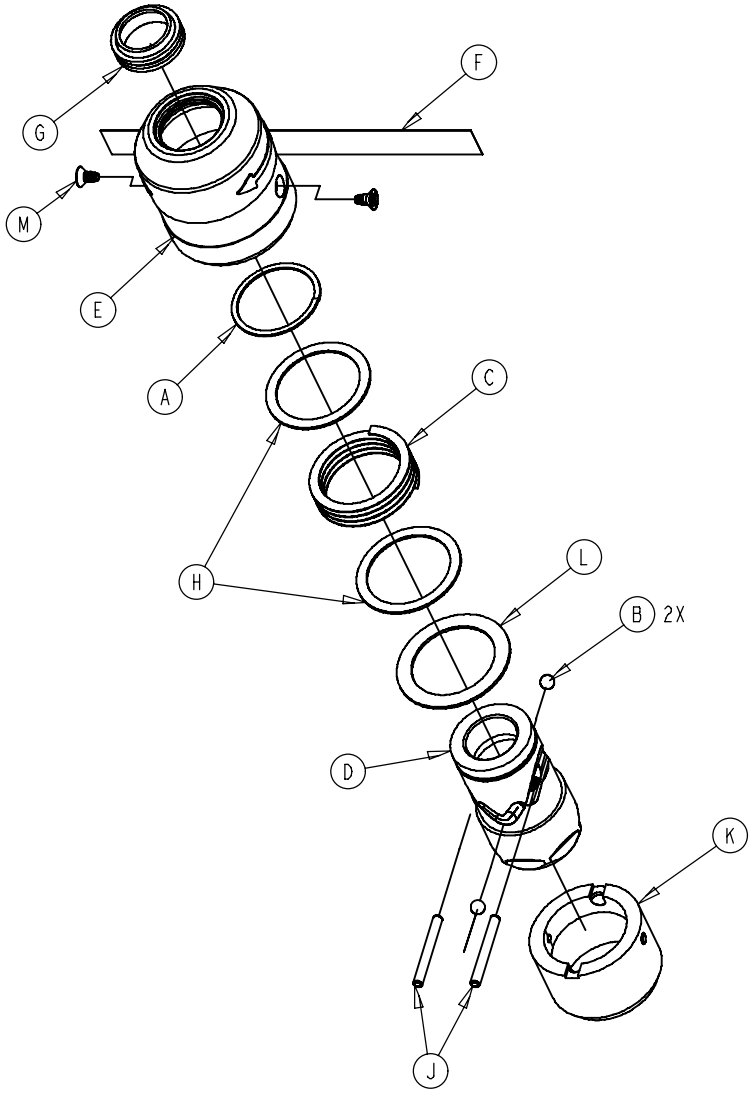

Item	Part No.	Part Name	Qty.
A	0028−167−000	Retaining Ring	1
B	0031−004−000	Steel Ball	2
C	0038−392−000	Wave Spring	1
D	0785−035−023	IV Latch ID Housing	1
E	0785−035−024	IV Latch OD Housing	1
F	0785−035−029	IV Release Label	2
G	1211−011−018	IV Latch Seal	2
H	1211−110−020	Washer	2
J	1211−110−021	IV Latch Locking Pin	2
K	1211−110−022	IV Latch Guide	1
L	1211−110−035	Washer	1
M	1211−110−036	Self−Tapping Screw	2

2035−140 Optional Fowler X−Ray Cassette Holder

Assembly part number 2032−140−10 (reference only)

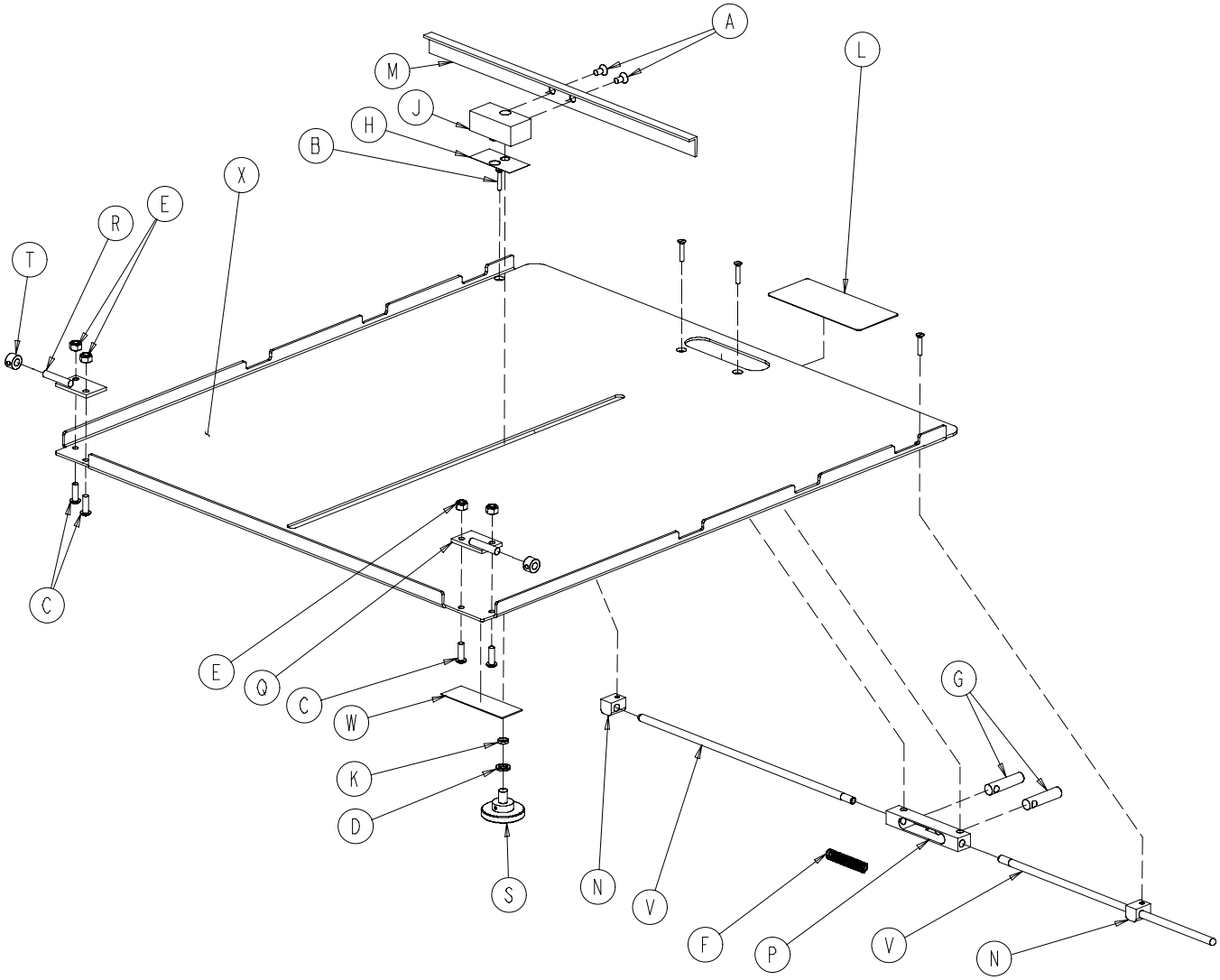

Item	Part No.	Part Name	Qty.	Item	Part No.	Part Name	Qty.
A	1−20	Flat C'sunk Hd. Mach Scr.	2	M	1010−23−28	Tray Angle	1
B	4−49	H. Soc. But. Hd. Cap Scr.	4	N	1010−23−37	Cassette Rod Guide	2
C	4−149	H. Soc. But. Hd. Cap Scr.	4	P	1020−23−16	Cassette Post Housing	1
D	14−3	Washer	1	Q	1020−23−19	Tray Hinge Wldmt., Rt.	1
E	16−3	Hex Nut	4	R	1020−23−20	Tray Hinge Wldmt., Lt.	1
F	38−122	Spring	1	S	1020−23−21	Knob	1
G	926−23−64	Tray Post	2	T	42−13	Collar w/Set Screw	2
H	926−23−69	Cassette Washer	1	V	2025−140−2	Cassette Actuating Rod	2
J	926−23−70	Cassette Block Subass'y	1	W	2035−140−25	Specification Label	1
K	926−23−71	Cassette Bushing	1	X	2032−140−99	Cassette Tray	1
L	1010−23−19	Instruction Label	1				

2035−18−10 I.V. Pole Transducer Mount Assembly

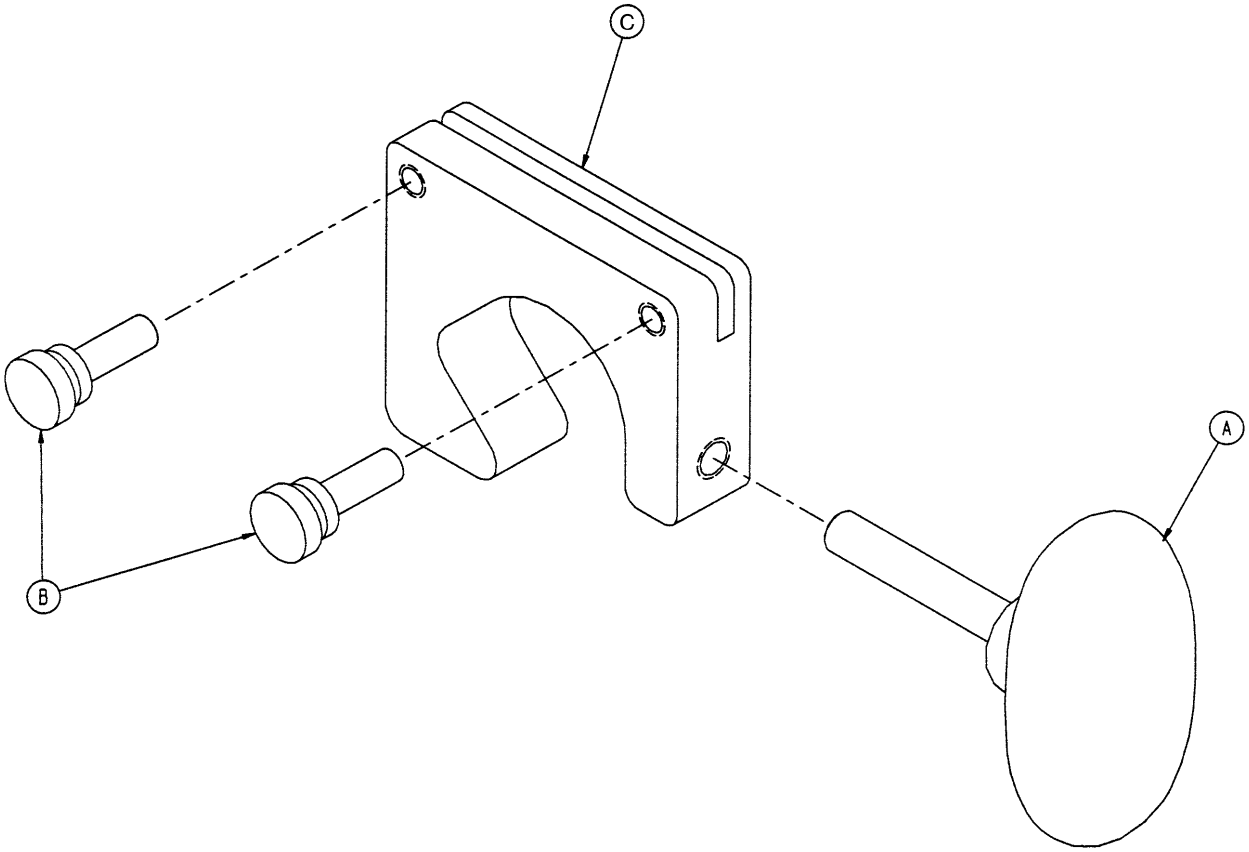

Item	Part No.	Part Name	Qty.
A	24−63	T−Knob	1
B	24−64	Thumb Screw	2
C	2035−18−11	Transducer Mount	1

Notes

Return to Table of Contents

2025−120−010 Optional Defibrillator Tray Assembly

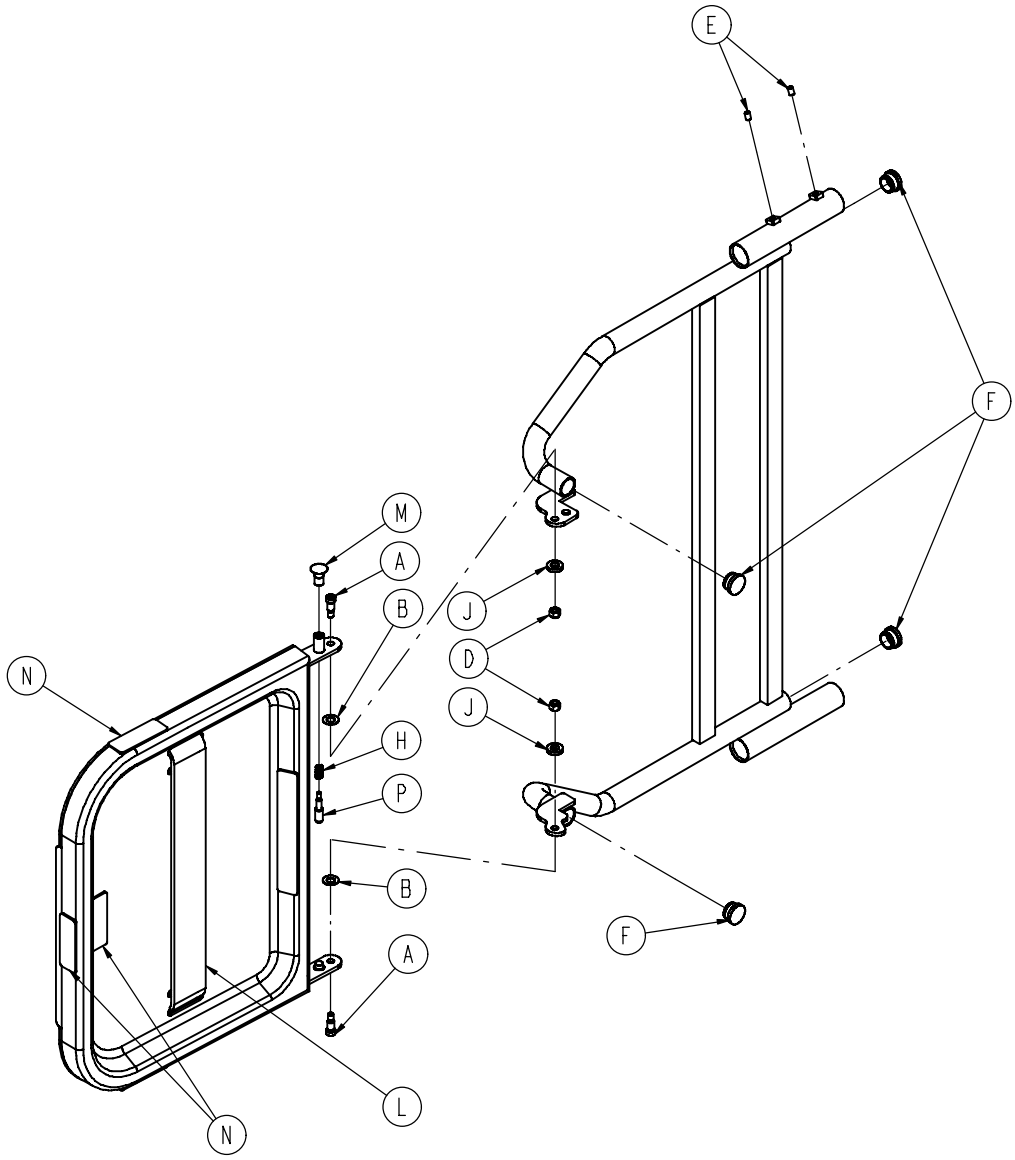

Item	Part No.	Part Name	Qty.	Item	Part No.	Part Name	Qty.
A	8−49	Soc. Hd. Shoulder Bolt	2	L	1010−50−21	Long Strap	1
B	14−20	Thrust Washer	2	M	1010−50−50	Knob	1
D	16−28	Fiberlock Nut	2	N	1010−50−57	Max. Weight Label	4
E	21−17	Set Screw	4	P	1010−50−242	Lock Pin	1
F	37−214	Hole Plug	4	R	2025−120−5	Equipment Label	1
H	38−133	Spring	1	S	2025−120−6	Specification Label	1
J	52−17	Spacer	2	T	2025−120−18	Tray Assembly	1
K	1010−50−19	“Push/Pull” Label	1	W	2025−120−25	Pivot Weldment Frame	1

2040−120−4 Optional Pleur−Evac Rack with Defib. Tray

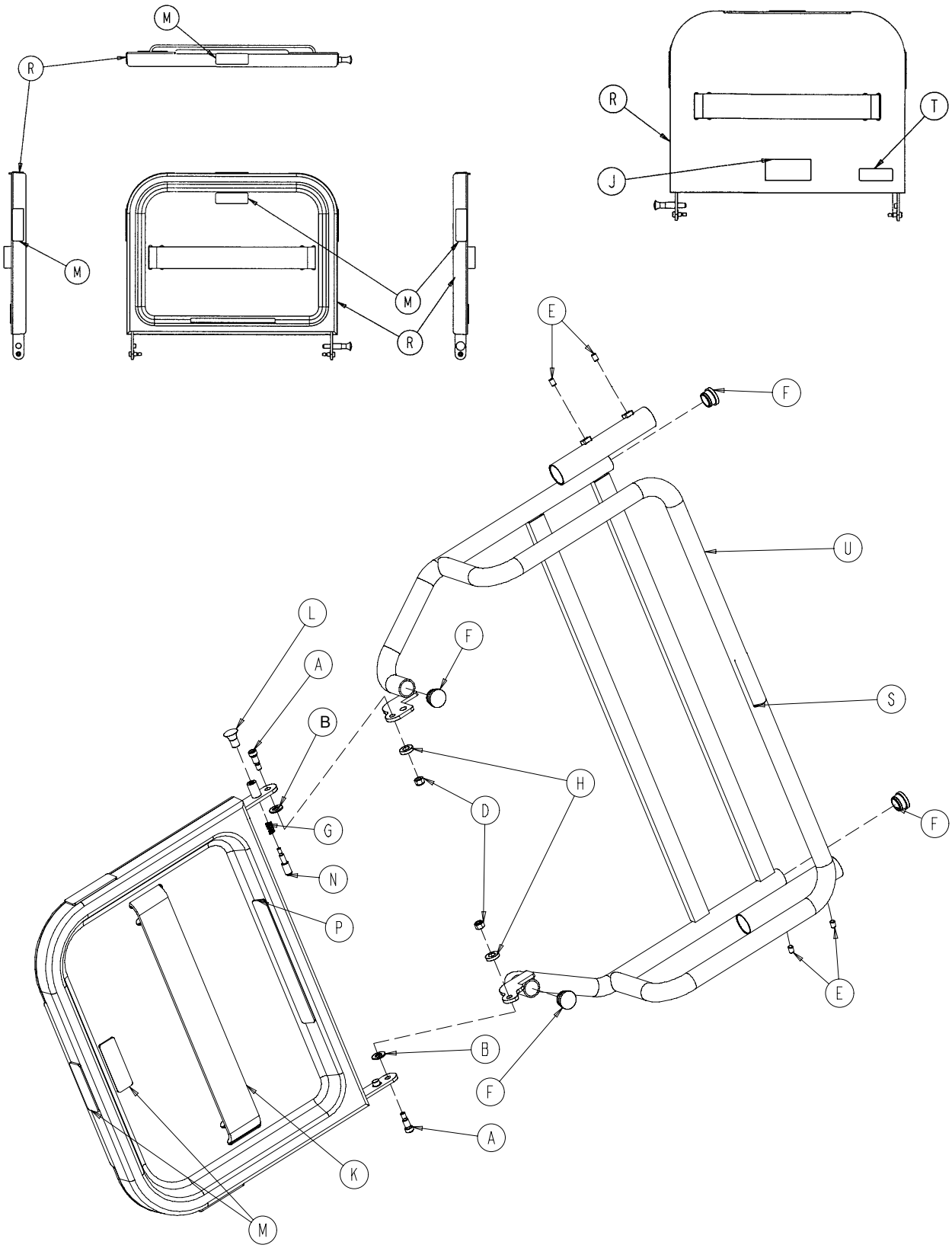

2040−120−4 Optional Pleur−Evac Rack with Defib. Tray

Item	Part No.	Part Name	Qty.
A	8−49	Soc. Hd. Shoulder Bolt	2
B	14−20	Thrust Washer	2
D	16−28	Fiberlock Nut	2
E	21−17	Set Screw	4
F	37−214	Hole Plug	4
G	38−133	Spring	1
H	52−17	Spacer	2
J	1010−50−19	“Push/Pull” Label	1
K	1010−50−21	Long Strap	1
L	1010−50−50	Knob	1
M	1010−50−57	“Max. Weight” Label	4
N	1010−50−242	Lock Pin	1
P	2025−120−5	Equipment Label	1
R	2025−120−18	Tray Assembly	1
S	2040−90−1	Warning Label	1
T	2040−90−5	Specification Label	1
U	2040−120−3	Rack Weldment	1

2040−120−20 Optional Pleur−Evac Rack Assembly

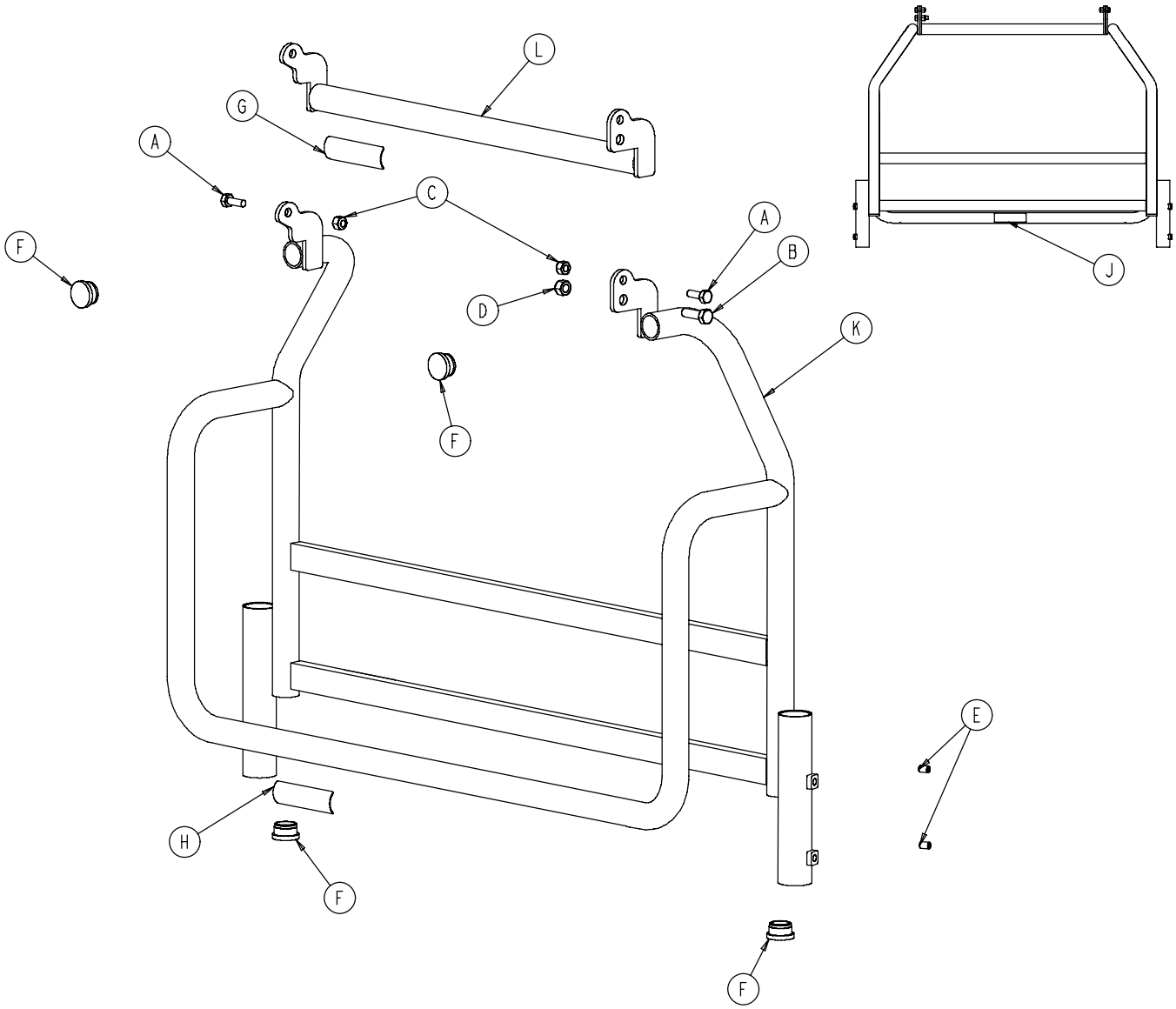

Item	Part No.	Part Name	Qty.
A	3−50	Hex Hd. Cap Screw	2
B	3−85	Hex Hd. Cap Screw	1
C	15−28	Nylock Nut	2
D	16−36	Nylock Nut	1
E	21−17	Set Screw	4
F	37−214	Hole Plug	4
G	1010−50−57	Maximum Weight Label	1
H	2040−90−1	Acc. Rail Warning Label	1
J	2040−90−4	Specification Label	1
K	2040−120−3	Rack Weldment	1
L	2040−120−10	Rack Top Weldment	1

2040−111 Optional Pump Rack Assembly

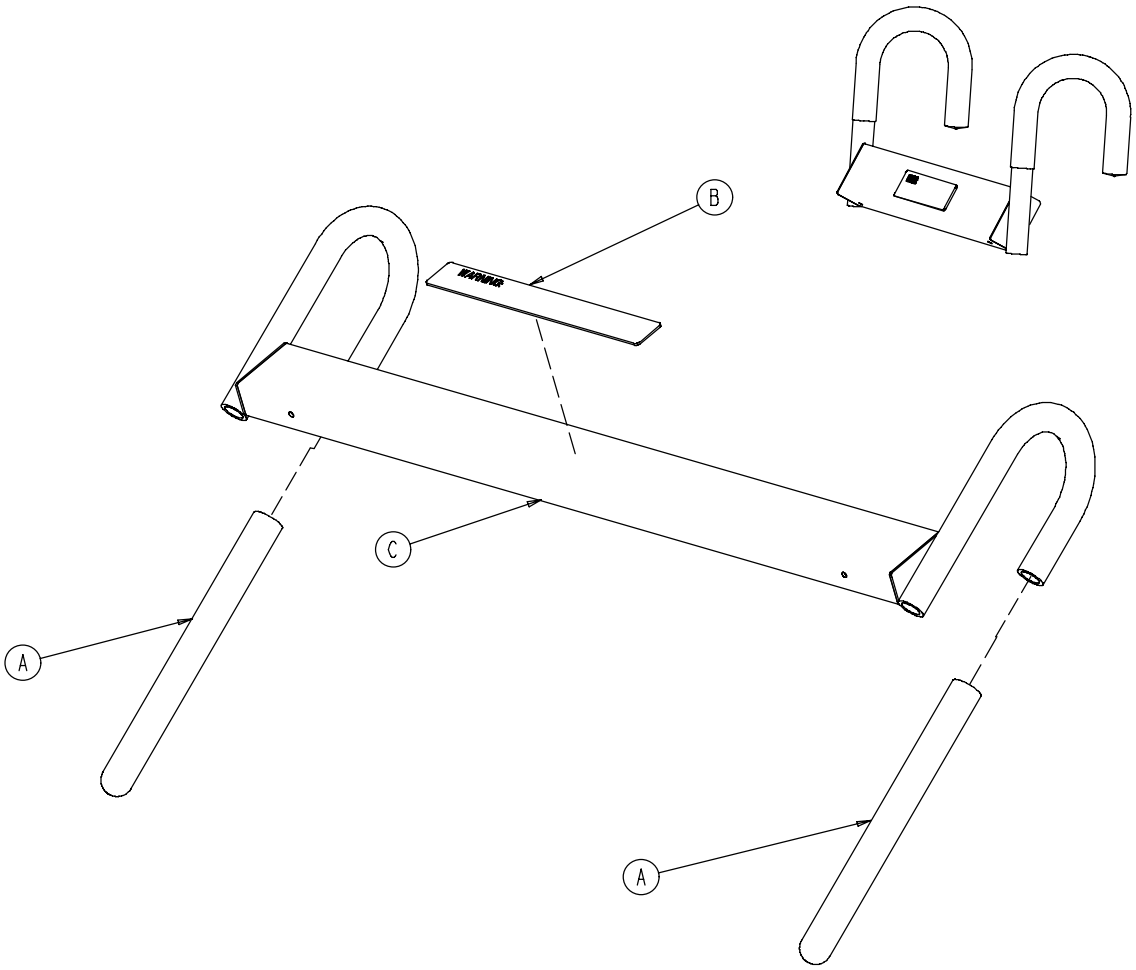

Item	Part No.	Part Name	Qty.
A	58−87	End Cap	2
B	2030−140−2	Pump Rack Label	1
C	2040−111−5	Pump Rack Tube	1

2025−150−10 Optional Upright O2 Bottle Holder

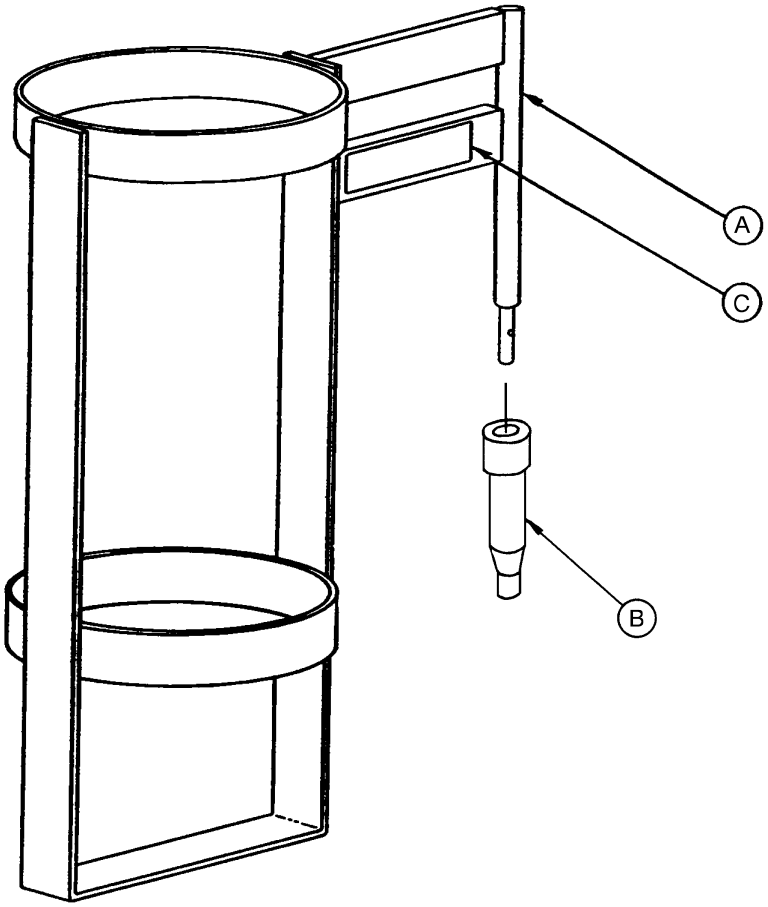

Item	Part No.	Part Name	Qty.
A	1010−30−11	Upright Bottle Holder	1
B	2025−150−1	Bottle Holder Adapter	1
C	2025−150−2	Specification Label	1

2025−40−10 Optional Bed Extender Pad

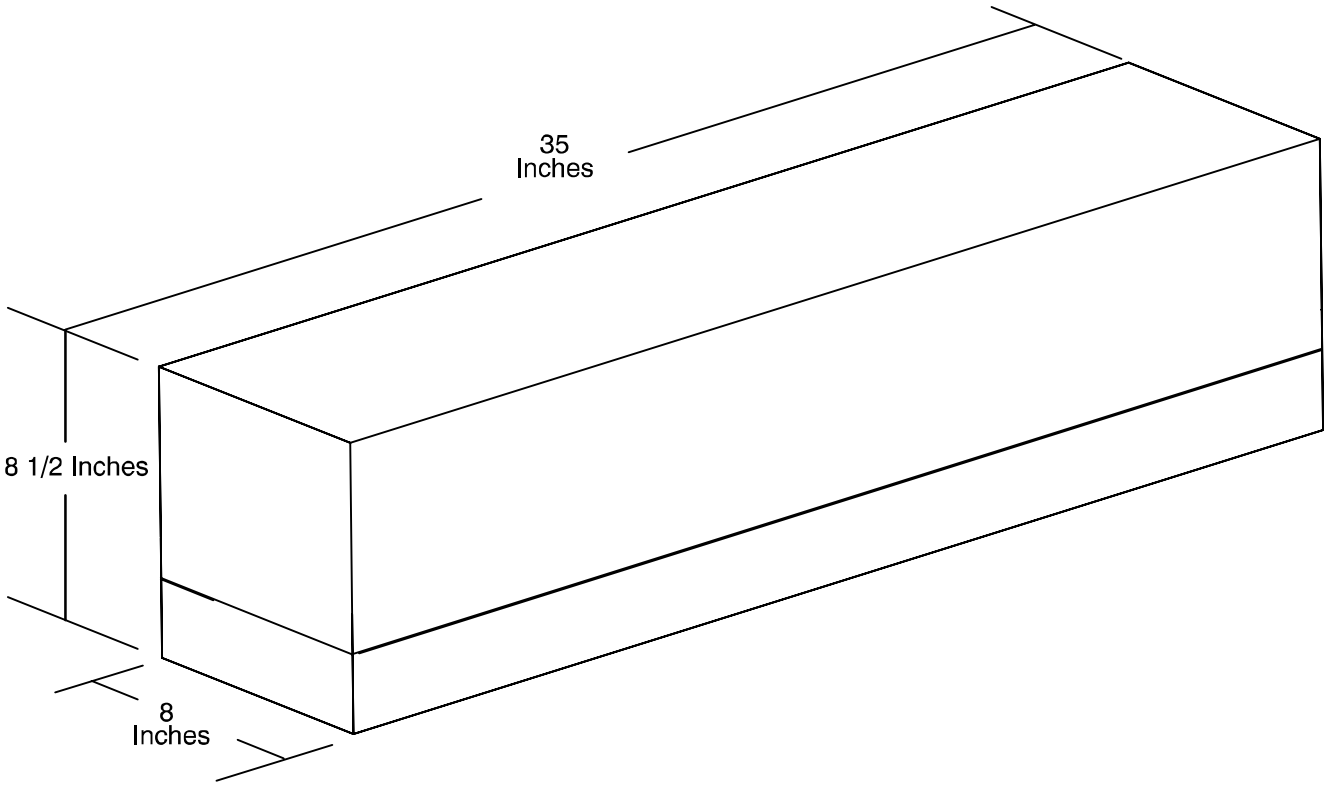

2040−130 Optional Siderail Pad Set

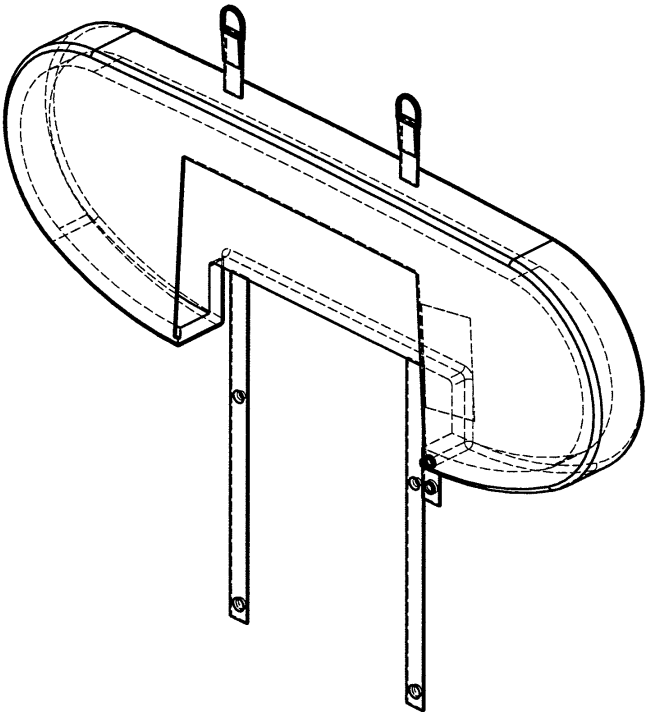

3000−336−11 Right Siderails

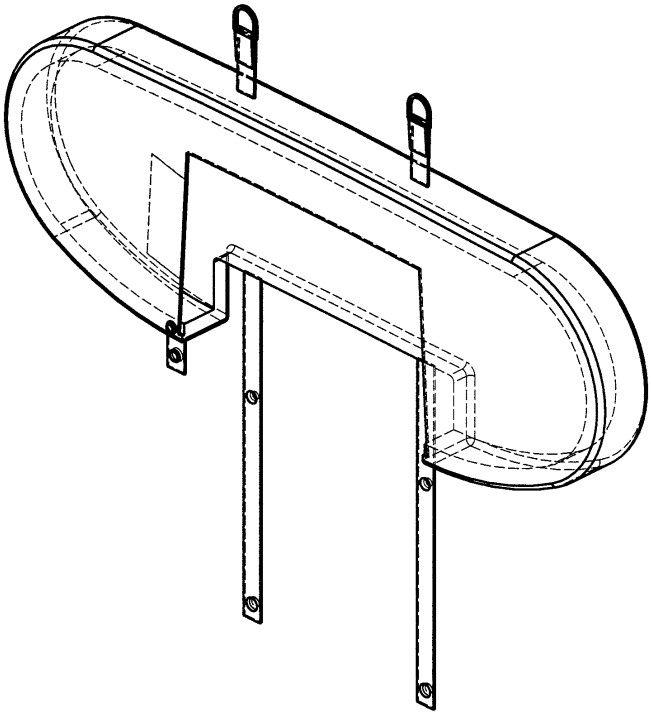

3000−336−12 Left Siderails

Assembly part number
2032−402−105 (reference only)
2032−402−205 (reference only)

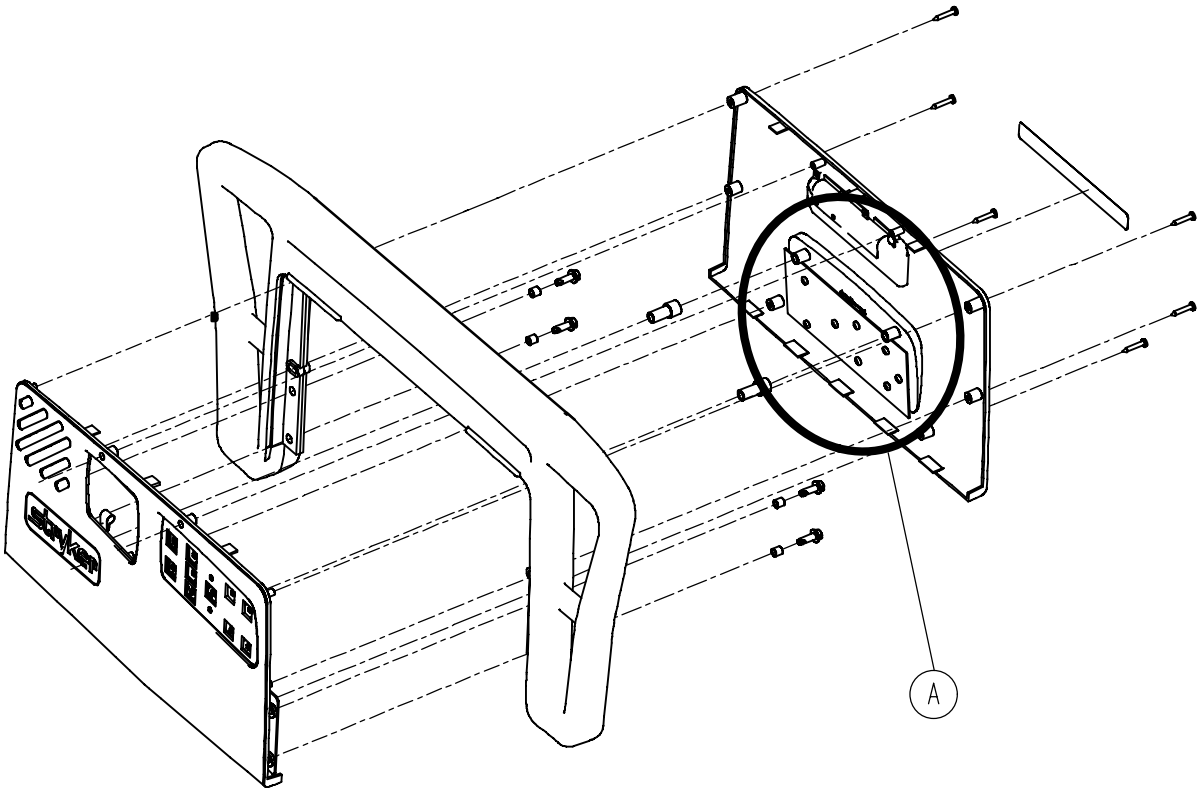

Item	Recycling/Material Code	Important Information	Qty
A	Printed Circuit Board		2 per Bed

Assembly part number
2032−402−105 (reference only)
2032−402−205 (reference only)

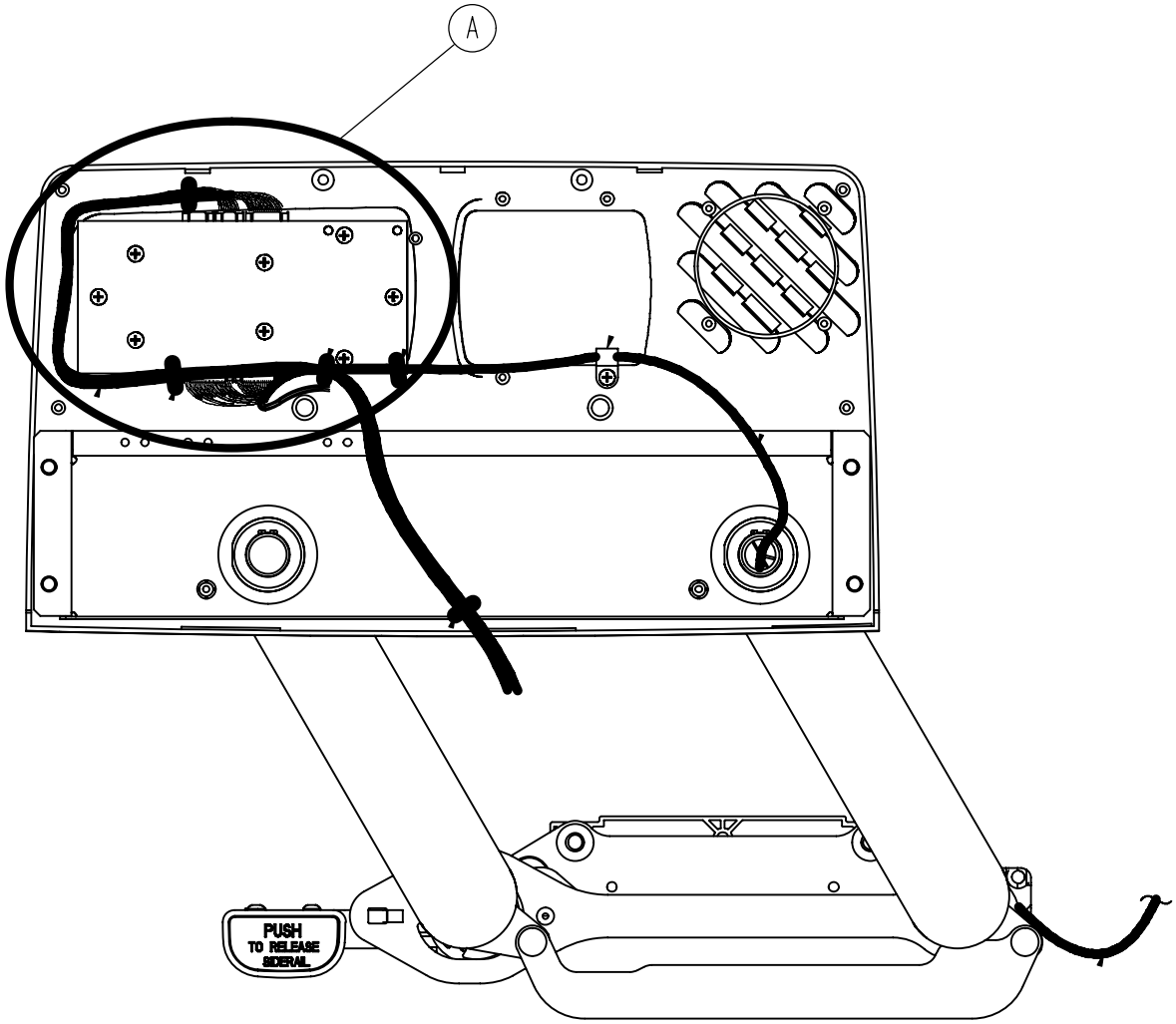

Item	Recycling/Material Code	Important Information	Qty
A	Printed Circuit Board		2 per Bed

Foot Board

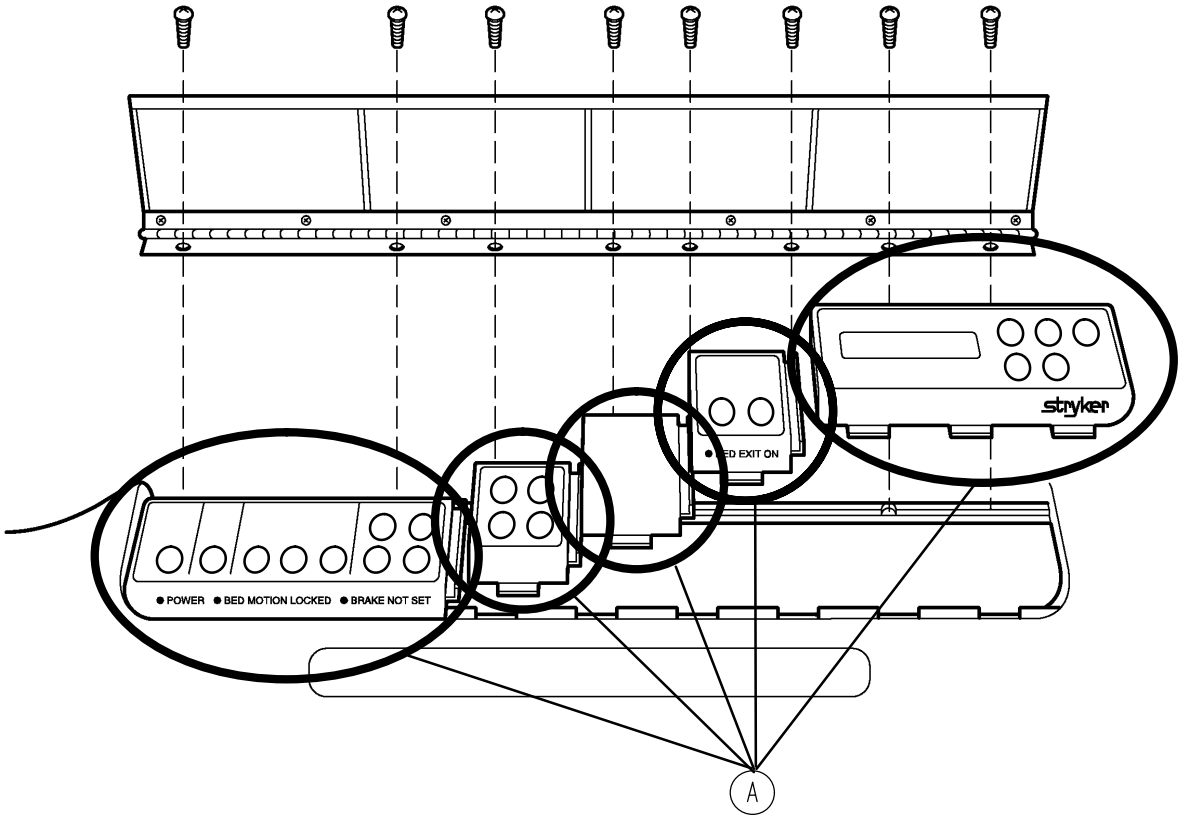

Item	Recycling/Material Code	Important Information	Qty
A	Printed Circuit Board		5

Assembly part number
2030−201−210 (reference only)

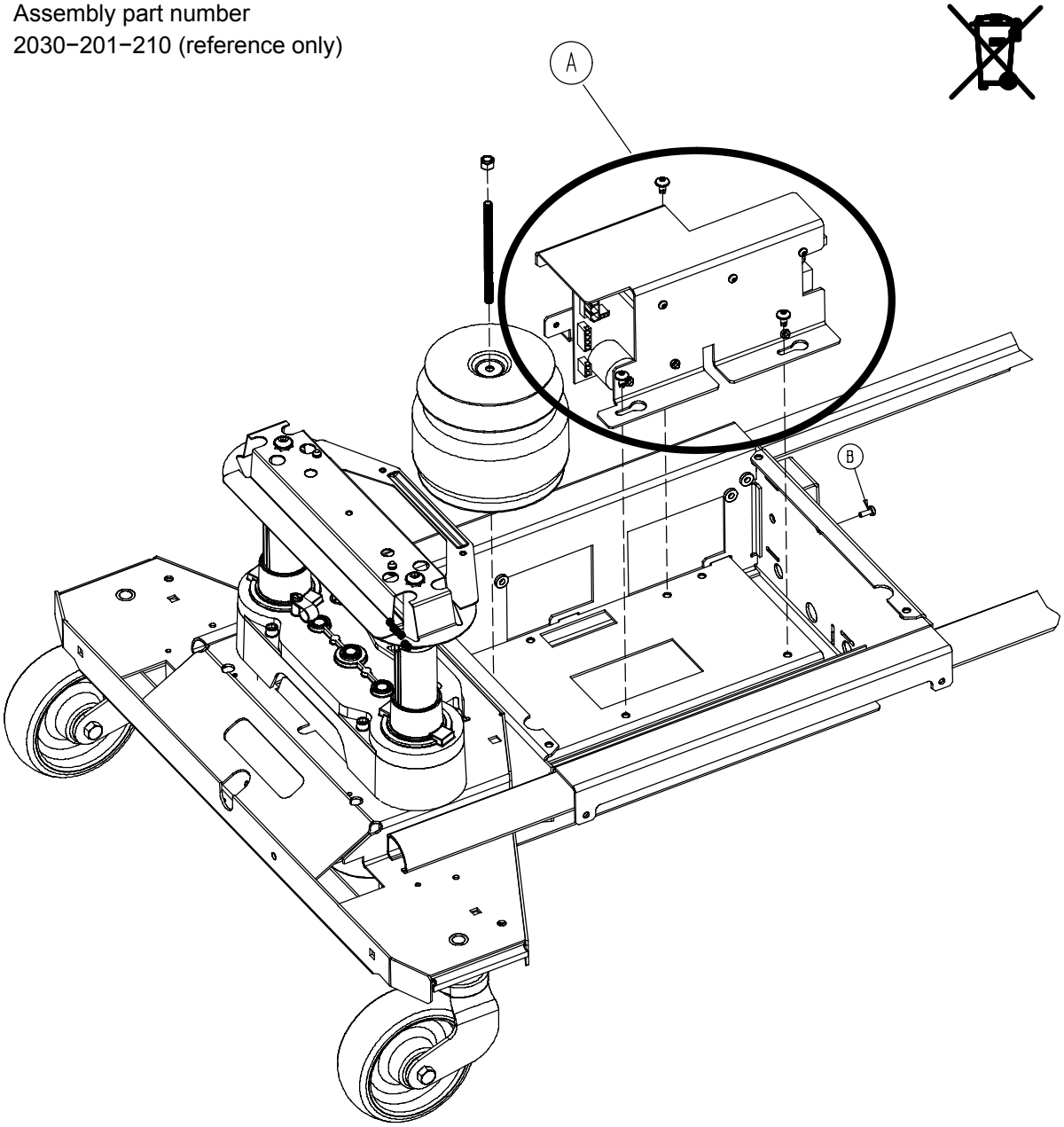

Item	Recycling/Material Code	Important Information	Qty
A	Printed Circuit Board		1

Assembly part number
2030−201−210 (reference only)

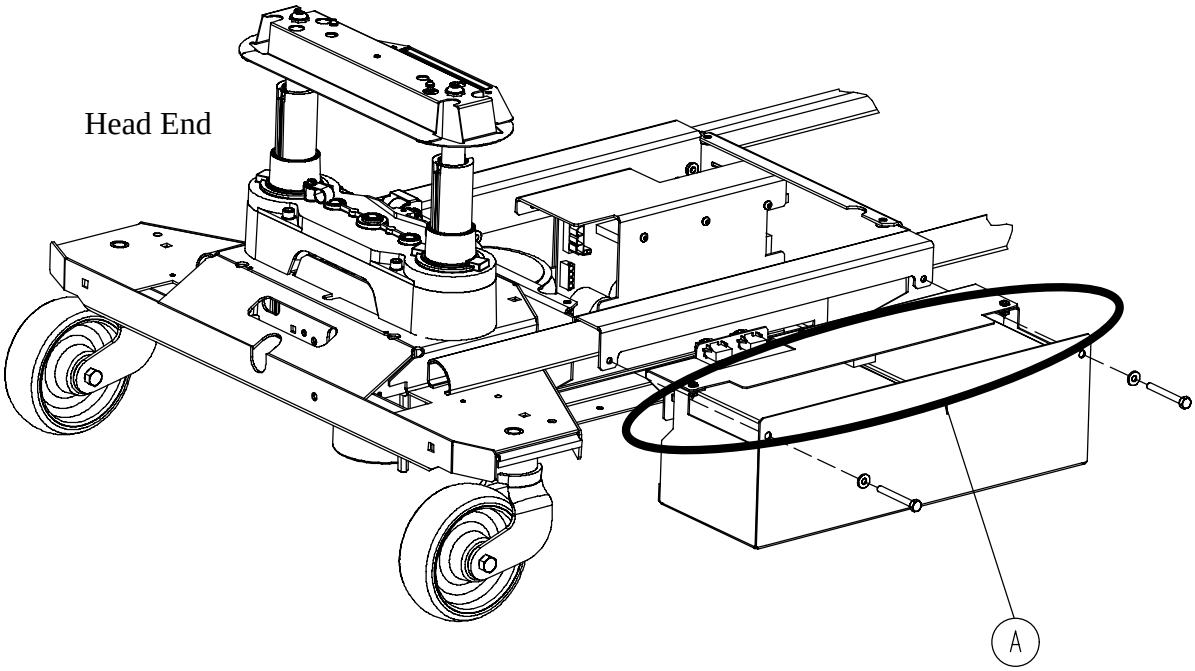

Item	Recycling/Material Code	Important Information	Qty
A	Batteries		2

Recycling Passport

Assembly part number
2032−231−010 (reference only)

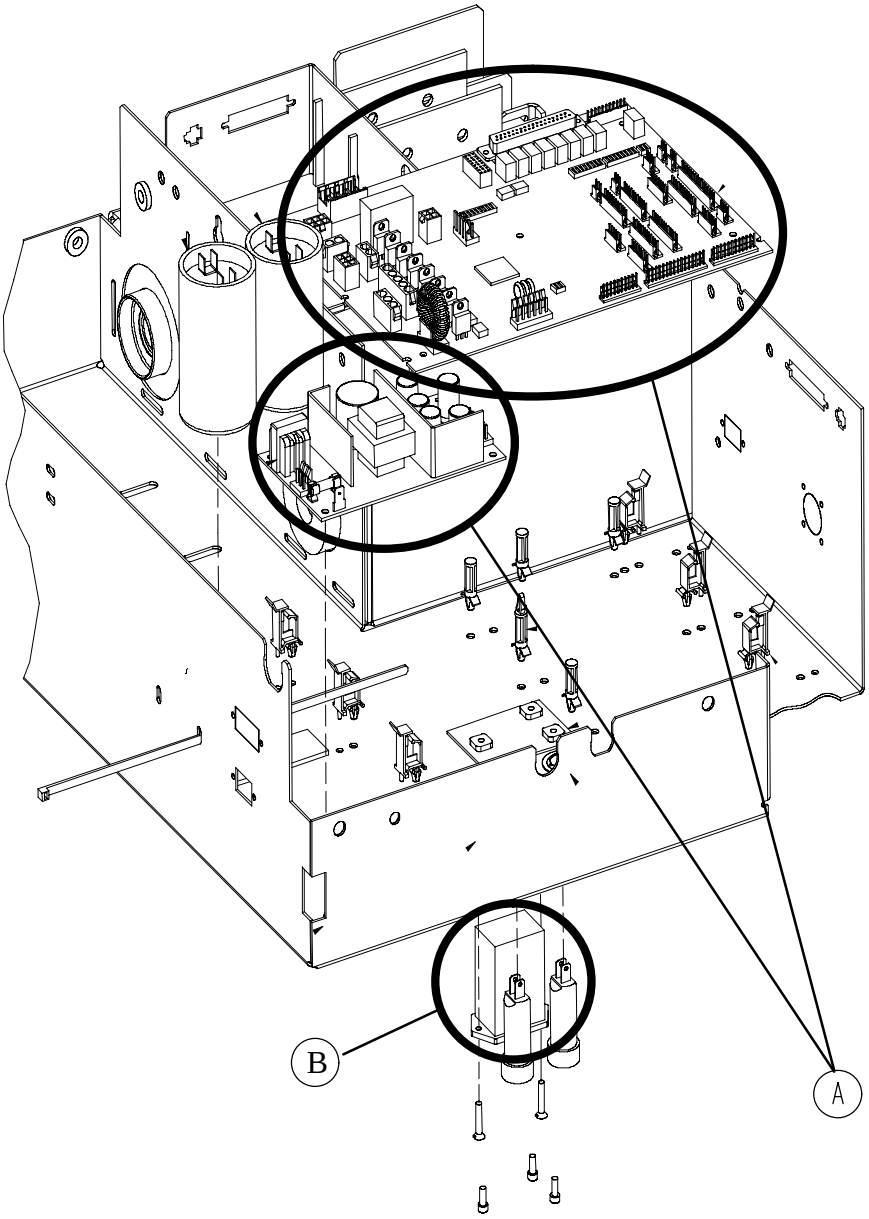

Item	Recycling/Material Code	Important Information	Qty
A	Printed Circuit Board		2
B	9V Battery		1

Assembly part number
2032−231−010 (reference only)

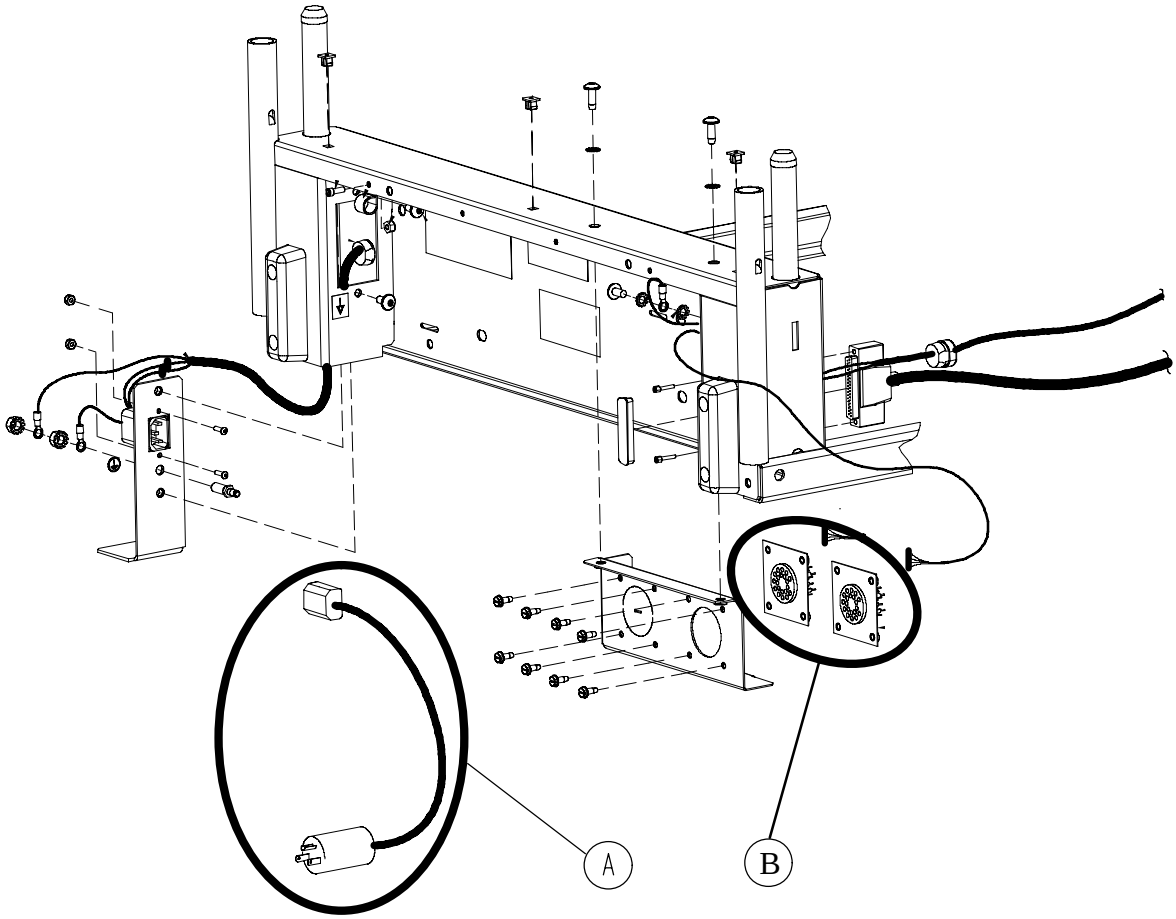

Item	Recycling/Material Code	Important Information	Qty
A	Power Cord		1
B	Printed Circuit Board		2

Assembly part number
2030−031−210 (reference only)

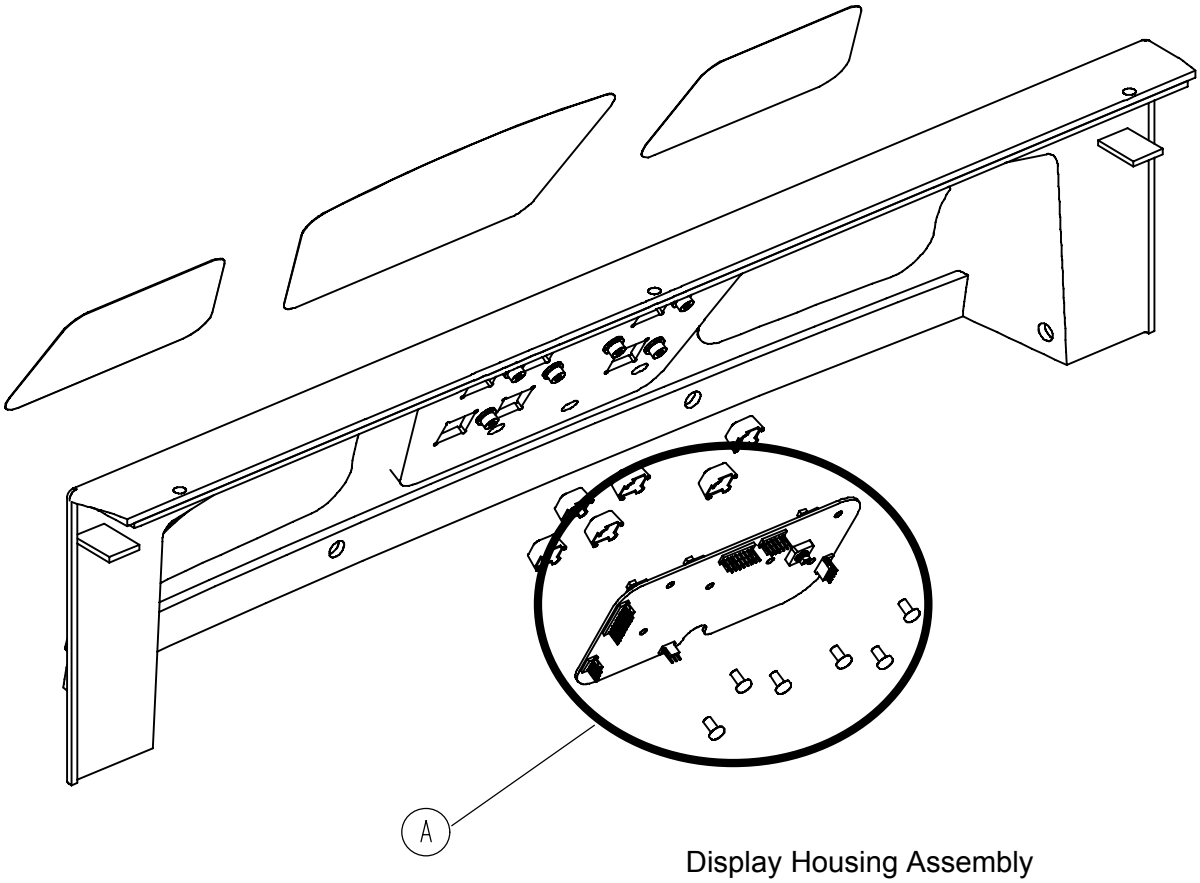

Display Housing Assembly

Item	Recycling/Material Code	Important Information	Qty
A	Printed Circuit Board		1

Assembly part number
2030−031−210 (reference only)

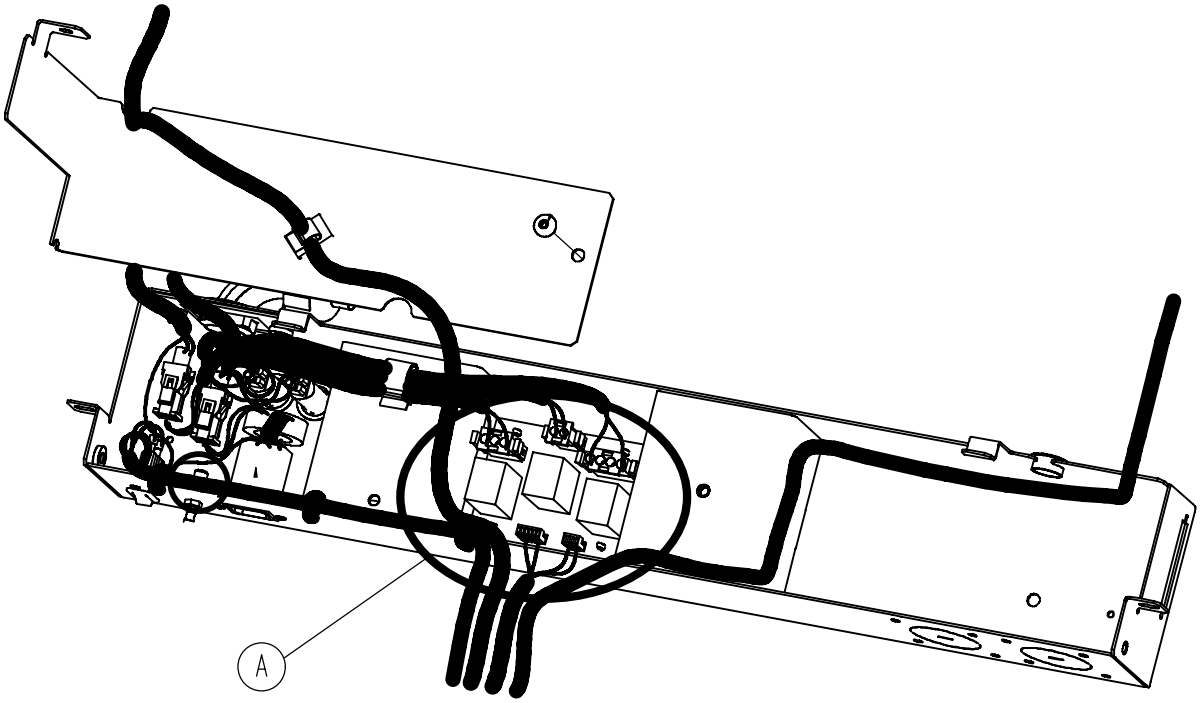

Item	Recycling/Material Code	Important Information	Qty
A	Printed Circuit Board		1

Warranty

Limited Warranty:

Stryker Medical Division, a division of Stryker Corporation, warrants to the original purchaser that its products should be free from defects in material and workmanship for a period of one (1) year after date of delivery. Stryker's obligation under this warranty is expressly limited to supplying replacement parts and labor for, or replacing, at its option, any product which is, in the sole discretion of Stryker, found to be defective. Stryker warrants to the original purchaser that the frame and welds on its beds will be free from structural defects for as long as the original purchaser owns the bed. If requested by Stryker , products or parts for which a warranty claim is made shall be returned prepaid to Stryker's factory. Any improper use or any alteration or repair by others in such manner as in Stryker's judgement affects the product materially and adversely shall void this warranty. Any repair of Stryker products using parts not provided or authorized by Stryker shall void this warranty. No employee or representative of Stryker is authorized to change this warranty in any way.

Stryker Medical beds are designed for a 15 year expected life under normal use conditions and appropriate periodic maintenance as described in the maintenance manual for each device.

This statement constitutes Stryker's entire warranty with respect to the aforesaid equipment. STRYKER MAKES NO OTHER WARRANTY OR REPRESENTATION, EITHER EXPRESSED OR IMPLIED, EXCEPT AS SET FORTH HEREIN. THERE IS NO W ARRANTY OF MERCHANTABILITY AND THERE ARE NO WARRANTIES OF FITNESS FOR ANY PARTICULAR PURPOSE. IN NO EVENT SHALL STRYKER BE LIABLE HEREUNDER FOR INCIDENTAL OR CONSEQUENTIAL DAMAGES ARISING FROM OR IN ANY MANNER RELATED TO SALES OR USE OF ANY SUCH EQUIPMENT.

To Obtain Parts and Service:

Stryker products are supported by a nationwide network of dedicated Stryker Field Service Representatives. These representatives are factory trained, available locally, and carry a substantial spare parts inventory to minimize repair time. Simply call your local representative, or call Stryker Customer Service at (800) 327−0770.

Service Contract Coverage:

Stryker has developed a comprehensive program of service contract options designed to keep your equipment operating at peak performance at the same time it eliminates unexpected costs. We recommend that these programs be activated *before* the expiration of the new product warranty to eliminate the potential of additional equipment upgrade charges.

A SERVICE CONTRACT HELPS TO:

- Ensure equipment reliability
- Stabilize maintenance budgets
- Diminish downtime
- Establish documentation for JCAHO
- Increase product life
- Enhance trade−in value
- Address risk management and safety

Stryker offers the following service contract programs:

SPECIFICATIONS	GOLD	SILVER	PM* ONLY
Annually scheduled preventative maintenance	X		X
All parts,** labor, and travel	X	X	
Unlimited emergency service calls	X	X	
Priority one contact; two hour phone response	X	X	X
Most repairs will be completed within 3 business days	X	X	
JCAHO documentation	X	X	X
On−site log book w/ preventative maintenance & emergency service records	X		
Factory−trained Stryker Service Technicians	X	X	X
Stryker authorized parts	X	X	X
End of year summary	X		
Stryker will perform all service during regular business hours (9−5)	X	X	X

* Replacement parts and labor for products under PM contract will be discounted.
** Does not include any disposable items, I.V. poles (except for Stryker HD permanent poles), mattresses, or damage resulting from abuse.

Stryker Medical also offers *personalized* service contracts.

Pricing is determined by age, location, model and condition of product.

For more information on our service contracts,
please call your local representative or call (800) 327−0770 (option #2).

Return Authorization:

Merchandise cannot be returned without approval from the Stryker Customer Service Department. An authorization number will be provided which must be printed on the returned merchandise. Stryker reserves the right to charge shipping and restocking fees on returned items.

SPECIAL, MODIFIED, OR DISCONTINUED ITEMS NOT SUBJECT T O RETURN.

Damaged Merchandise:

ICC Regulations require that claims for damaged merchandise must be made with the carrier within fifteen (15) days of receipt of merchandise. DO NOT ACCEPT DAMAGED SHIPMENTS UNLESS SUCH DAMAGE IS NOTED ON THE DELIVERY RECEIPT AT THE TIME OF RECEIPT. Upon prompt notification, Stryker will file a freight claim with the appropriate carrier for damages incurred. Claim will be limited in amount to the actual replacement cost. In the event that this information is not received by Stryker within the fifteen (15) day period following the delivery of the merchandise, or the damage was not noted on the delivery receipt at the time of receipt, the customer will be responsible for payment of the original invoice in full.

Claims for any short shipment must be made within thirty (30) days of invoice.

International Warranty Clause:

This warranty reflects U.S. domestic policy. Warranty outside the U.S. may vary by country. Please contact your local Stryker Medical representative for additional information.

European Representative

Stryker EMEA RA/QA Director
Stryker France
ZAC Satolas Green Pusignan
Av. De Satolas Green
69881 MEYZIEU Cedex
France

3800 E. Centre Ave., Portage, MI 49002
(800) 327−0770
www.stryker.com

04/2010 2030−209−002 Rev B