stryker

MV3 Bariatric Bed

Maintenance Manual

REF 5900000001

EN

5900-109-002 Rev AC.0 2025-11

Table of Contents

Warning/Caution/Note Definition

The words **WARNING**, **CAUTION**, and **NOTE** carry special meanings and should be carefully reviewed.

WARNING

Alerts the reader about a situation which, if not avoided, could result in death or serious injury. It may also describe potential serious adverse reactions and safety hazards.

CAUTION

Alerts the reader of a potentially hazardous situation which, if not avoided, may result in minor or moderate injury to the user or patient or damage to the product or other property. This includes special care necessary for the safe and effective use of the device and the care necessary to avoid damage to a device that may occur as a result of use or misuse.

Note - Provides special information to make maintenance easier or important instructions clearer.

Summary of safety precautions

Always read and strictly follow the warnings and cautions listed on this page. Service only by qualified personnel.

WARNING

- Do not lower the litter too low or you may cause damage to the support bolts.
- Portable RF communications equipment, including peripherals such as antenna cables and external antennas, should be no closer than 12 inches (30 cm) to any part of MV3, including cables specified by the manufacturer.
- Avoid stacking or placing equipment adjacent with other equipment to prevent improper operation of the products. If such use is necessary, carefully observe stacked or adjacent equipment to make sure that they are operating properly.
- The use of accessories, transducers, and cables, other than those specified or provided by the manufacturer, could result in increased electromagnetic emissions or decreased electromagnetic immunity and result in improper operation.

CAUTION

- Always make sure that the product is clear of obstacles before you use motion functions.
- Always calibrate the product angles when you replace the main control board or any actuator or product damage may occur.
- Always use electrostatic discharge (ESD) protective equipment before you open antistatic bags and service electronic parts.
- Do not place unprotected circuit boards on the floor.
- Always perform this procedure in a secure location with the floor jack secure to the base frame before you remove the caster to prevent the risk of injury.
- Do not put your hands or feet below the caster when you remove or attach the caster to prevent the risk of injury.
- Always use ESD protective equipment before you open antistatic bags and service electronic parts.
- Always leave the bolts loose in the support holes, so the bolt head is out far enough to stop the lift mechanism slide block.
- This equipment is not intended for use in residential environments and may not provide adequate protection to radio reception in such environments.

Introduction for service

This manual assists you with the service of your Stryker product. Read this manual to service this product. This manual does not address the operation of this product. See the Operations Manual for operating and use instructions. To view your Operations Manual online, see https://techweb.stryker.com/.

Expected service life

The 5900 MV3 bariatric bed has an eight year expected service life under normal use conditions and with appropriate periodic maintenance.

The backup batteries have a one year expected service life under normal use conditions.

Contact information

Contact Stryker Customer Service or Technical Support at: 1-800-327-0770.

Stryker Medical

3800 E. Centre Avenue

Portage, MI 49002

USA

Note - The user and/or the patient should report any serious product-related incident to both the manufacturer and the Competent authority of the European Member State where the user and/or patient is established.

To view your operations or maintenance manual online, see https://techweb.stryker.com/.

Have the serial number (A) of your Stryker product available when calling Stryker Customer Service or Technical Support. Include the serial number in all written communication.

Serial number location

You can find the serial number (A) below the headboard at the head of the bed (Figure 1).

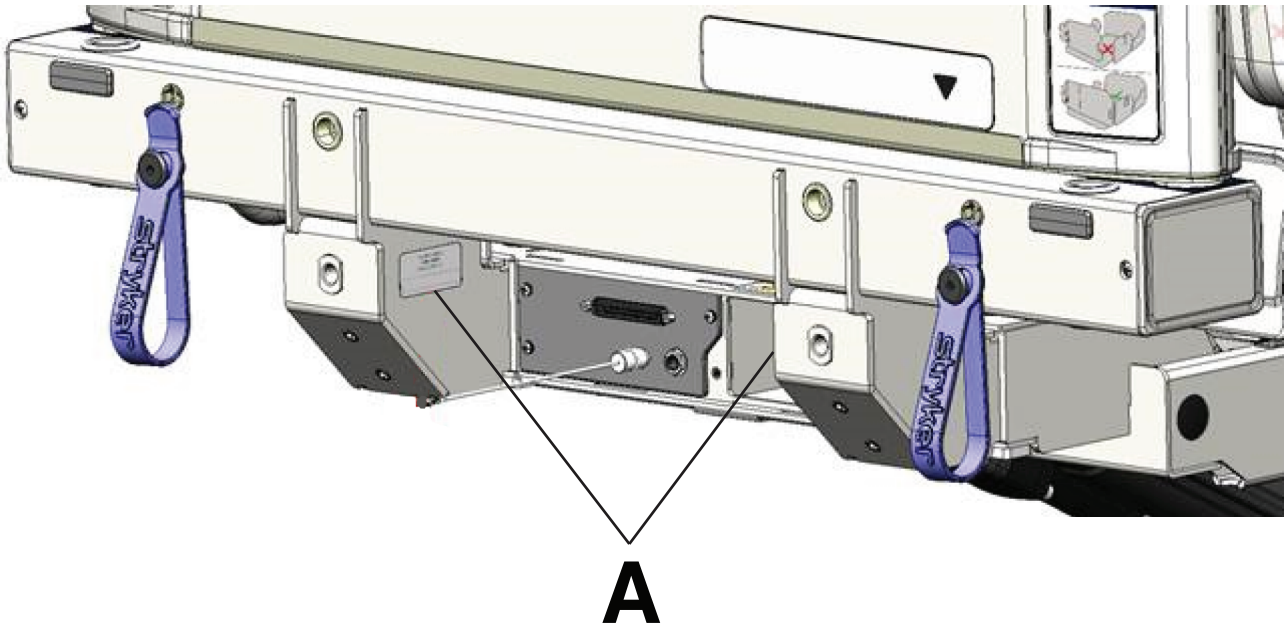

Figure 1 – Serial number location-operator view

Preventive maintenance

Remove the product from service before you perform the preventive maintenance inspection. Check all items listed during annual preventive maintenance for all Stryker Medical products. You may need to perform preventive maintenance checks more often based on your level of product usage. Service only by qualified personnel.

Note - Clean and disinfect the exterior of the support surface before inspection, if applicable.

Inspect the following items:

_____ All welds

_____ All fasteners are secure

_____ Casters lock with brake pedal applied

_____ Casters are secure and swivel

_____ Casters are free of wax and debris

_____ Footboard light LED and bumper LEDs flash when brakes are released

_____ Steer function works

_____ Siderails move, latch, and stow

_____ Deck expands, retracts, and locks in all positions

_____ CPR release operates

_____ IV pole is intact and operates (option)

_____ Foley bag hooks intact

_____ No cracks or splits in headboard, footboard or siderail panels

_____ No rips or cracks in mattress cover

_____ All functions on head end siderails operate (includes LEDs)

_____ All functions on footboard operate (includes LEDs)

_____ No cracks or damage to control overlays

_____ Calibrate scale system

_____ Night light operates

_____ Power cords and plug not frayed or damaged

_____ No damage to nurse call connections

_____ All ground strap cables are secure to the frame

_____ Ground impedance not more than 200 mΩ (milliohms)

_____ Current leakage not more than 300 µA (microamps)

_____ Check lift actuator clevis pins for grease, apply if needed

_____ Ground chains intact

_____ Trendelenburg/reverse Trendelenburg angle accuracy is minimum +12° to -12°

_____ Fowler angle accuracy is 0° - 60° ± 2°

_____ Fowler holds position at 30° with weight

_____ Siderail switches operate (iBed Awareness)

_____ Footboard light LED and bumper LEDs operate (iBed Awareness)

_____ Inspect footboard control labels for signs of degradation

_____ Inspect hi-lo actuators for oil leaks

_____ Inspect footboard connector housing for cracks or damage

_____ All motions function

_____ Nurse call functions

_____ Auxiliary outlets function (test ground fault interrupter)

_____ Replace battery assembly (5900280025) (one year expected service life)

_____ Set clock to local date and time

Product serial number:
Completed by:
Date:

Error codes/Troubleshooting

Error codes are detailed in the table below.

Error code	Cause	Troubleshooting
0.02	Error on non volatile memory (nvm)	1. Reboot product 2. Replace main control unit (MCU)
0.03	Watchdog switch in wrong position or broken (comWatchdogDisabled)	1. Toggle watchdog switch on MCU
0.04	Software version mismatched or missing board (softwareVersionMismatch)	1. Reboot product 2. Check for a missing board error, if missing take corrective action on cable or board
0.05	Brake switch malfunction (brake)	1. Check brake cable and switch
0.06	Obstruction switch malfunction (obstruction)	1. Check each of the four obstruction switches and cables
0.07	CPR switch/cable malfunction (cprHandle)	1. Check CPR switch, cable, and head actuator
0.08	FSC_KPD board is not responding (FSC_KPD_missing)	1. Check cable 2. Check audio visual board (AVB) (electrical issue)
0.09	FSC_GUI board is not responding (FSC_GUI_missing)	1. Check cable 2. Check FSC_KPD • Software in bootloader mode • Software incorrect • Electrical issue 3. AVB (electrical issue)
0.10	SRK PL board is not responding (SRK_PL_missing)	1. Check cables 2. Check junction boards 3. Check SRK board 4. Check SRC (software and electrical)
0.11	SRK PR board is not responding (SRK_PR_missing)	1. Check cables 2. Check junction boards 3. Check SRK board 4. Check SRC (software and electrical)
0.12	PSI board is not responding (PSI_missing)	1. Check cables 2. Check junction boards
0.13	ACB HILO foot board is not responding (ACB_HILO_FT_missing)	1. Check cables 2. Check junction boards
0.14	ACB HILO head board is not responding (ACB_HILO_HD_missing)	1. Check cables 2. Check junction boards

Error code	Cause	Troubleshooting
0.15	ACB foot board is not responding (ACB_FT_missing)	1. Check cables 2. Check junction boards
0.16	ACB head board is not responding (ACB_HD_missing)	1. Check cables 2. Check junction boards
0.17	ACB knee board is not responding (ACB_KN_missing)	1. Check cables 2. Check junction boards
0.18	SRC foot patient left board is not responding (SRC_FT_PL_missing)	1. Check cables 2. Check junction boards
0.19	SRC head patient left board is not responding (SRC_HD_PL_missing)	1. Check cables 2. Check junction boards
0.20	SRC foot patient right board is not responding (SRC_FT_PR_missing)	1. Check cables 2. Check junction boards
0.21	SRC head patient right board is not responding (SRC_HD_PR_missing)	1. Check cables 2. Check junction boards
0.22	DPM foot board is not responding (DPM_FT_missing)	1. Check cables 2. Check junction boards
0.23	DPM head board is not responding (DPM_HD_missing)	1. Check cables 2. Check junction boards
0.24	DPM MID board is not responding (DPM_MID_missing)	1. Check cables 2. Check junction boards
0.25	SMB foot board is not responding (SMB_FOOT_missing)	1. Check cables 2. Check junction boards
0.26	SMB head board is not responding (SMB_HEAD_missing)	1. Check cables 2. Check junction boards
0.27	AVB board is not responding (AVB_missing)	1. Check cables 2. Check junction boards
0.29	Real Time Clock is not responding (RTC chip fail)	1. Reboot product 2. Replace MCU, if 0.02 is present, also issue with PMB charger chip 3. Replace PMB
0.30	CPR handle switch stuck (StuckCPRhandle)	1. Check CPR handle 2. Check pull cable 3. Check head actuator

Error code	Cause	Troubleshooting
1.05	24V is out of range (24V)	1. Power cable issue 2. PMB ciruit error, replace PMB
1.08	Battery not connected to the system or completely depleted (batteryMissing)	1. Check cables 2. Replace battery
1.09	Damaged battery (batteryShort)	1. Replace batteries
1.10	Unable to communicate with accelerometer (Accelerometer error)	1. Reboot product 2. Replace MCU, if 0.02 is present, also issue with PMB charger chip 3. Replace PMB
1.11	HILO foot configuration error (HiloFoot config)	1. WD switch position 2. Reboot product
1.12	HILO foot drive circuit error (HiloFoot Drive ckt)	1. Check 24V cable to actuator control board (ACB) 2. Disconnect actuator from ACB 3. Replace ACB
1.13	HILO head configuration error (HiLo Head config)	1. WD switch position 2. Reboot product 3. Check HILO head potentiometer cable (30159) 4. Check HILO head counts in actuator maintenance menu 5. Check HILO head counts in angle maintenance menu • Check if counts are between 1024-1033 or not moving 6. Check HILO foot potentiometer cable (30124) 7. Recalibrate angles
1.14	HILO head drive circuit error (HiLo Head Drive Ckt)	1. Check 24V cable to ACB 2. Disconnect actuator from ACB 3. Replace ACB
1.15	Foot actuator configuration error (Foot config)	1. WD switch position 2. Recalibrate angles 3. Reboot product 4. Check foot counts in angle maintenance menu • Check if foot counts are stored between power cycles • If they are not stored, EEPROM error 5. Replace board
1.16	Foot drive circuit malfunction (Foot Drive ckt)	1. Check 24V cable to ACB 2. Disconnect actuator from ACB 3. Replace ACB

Error code	Cause	Troubleshooting
1.17	Head actuator configuration error (Head config)	1. WD switch position 2. Reboot product 3. Check head potentiometer cable (30141) 4. Check head counts in actuator maintenance menu
1.18	Head drive circuit malfunction (Head Drive ckt)	1. Check 24V cable to ACB 2. Disconnect actuator from ACB 3. Replace ACB
1.19	Knee actuator configuration error (Knee config)	1. WD switch position 2. Reboot product 3. Check knee counts in actuator maintenance menu • Check if knee counts are stored between power cycles • If they are not stored, EEPROM error • Replace board • Recalibrate angles 4. Check HILO foot counts in actuator maintenance menu • Check if counts are between 1024-1033 or not moving 5. Check HILO foot potentiometer cable (30124) 6. Recalibrate angles
1.20	Knee drive circuit malfunction (Knee Drive ckt)	1. Check 24V cable to ACB 2. Disconnect actuator from ACB 3. Replace ACB
1.21	PSI configuration error (PSI config)	1. Replace switch if this appears only in some positions 2. WD switch position
1.22	Patient left foot SRC configuration error (SRC PL Foot config)	1. Replace switch if this appears only in some positions 2. WD switch position
1.23	Patient left head SRC configuration error (SRC PL Head config)	1. Replace switch if this appears only in some positions 2. WD switch position
1.24	Patient right foot SRC configuration error (SRC PR Foot config)	1. Replace switch if this appears only in some positions 2. WD switch position
1.25	Patient right foot SRC configuration error (SRC PR Head config)	1. Replace switch if this appears only in some positions 2. WD switch position
1.26	DPM foot configuration error (DPM FT config)	1. Calibration error 2. Trim error • If values from DPM maintenance screen are at 36 and less than 600, this error bit is set 3. WD switch position

Error code	Cause	Troubleshooting
1.27	DPM head configuration error (DPM HD config)	1. Calibration error 2. Trim error • If values from DPM maintenance screen are at 36 and less than 600, this error bit is set 3. WD switch position
1.28	DPM MID configuration error (DPM MID Config)	1. Calibration error 2. Trim error • If values from DPM maintenance screen are at 36 and less than 600, this error bit is set 3. WD switch position
1.29	SMB head configuration error (SMB Head Config)	1. Load cell missing 2. EEPROM error on board 3. Secondary scale missing (also will set 0.25) 4. WD switch position
1.30	SMB foot configuration error (SMB Foot Config)	1. Load cell missing 2. EEPROM error on board 3. Secondary scale missing (also will set 0.25) 4. WD switch position
1.31	AVB configuration error (AVB Foot Config)	1. WD switch position

Problem	Solution
No power	1. Check product power cord for connection at wall outlet and power inlet at head of the bed 2. Check the two fuses in the power inlet for continuity 2.1. If fuses are intact, move to step 3 2.2. If fuse(s) are blown, replace and check for product power 3. Check for proper mains voltage at the power supply 3.1. If present, move to step 4 3.2. If absent, check power inlet and cabling to the power supply 4. Check for 24VDC out at the power supply 4.1. If present, move to step 5 4.2. If absent, replace the power supply 5. Check for 24VDC in at the main control unit (MCU) 5.1. If present, move to step 6 5.2. If absent, check cabling from the power supply to the MCU 6. Check for power LEDs on the MCU 6.1. If present, product should function 6.2. If absent, replace the MCU
No Fowler movement	1. Check for stuck manual CPR mechanism 2. Check Fowler actuator cables and connections 3. Check for forced motion through *Actuator maintenance* (page 20) 3.1. If present, recalibrate the limits 3.2. If absent, move to step 3 4. Check for power LEDs on the Fowler actuator control board (ACB) 4.1. If present: 4.1.1. Check for 24VDC when you press the function button 4.1.2. Move to step 4 4.2. If absent, check cabling from the MCU to the ACB 5. Replace the actuator
No knee Gatch movement	1. Check knee Gatch actuator cables and connections 2. Check for forced motion through *Actuator maintenance* (page 20) 2.1. If present, recalibrate the limits 2.2. If absent, move to step 3 3. Check for power LEDs on the knee Gatch ACB 3.1. If present: 3.1.1. Check for 24VDC when you press the function button 3.1.2. Move to step 4 3.2. If absent, check cabling from the MCU to the ACB 4. Replace the actuator

Problem	Solution
No foot movement	1. Check foot actuator cables and connections 2. Check for forced motion through *Actuator maintenance* (page 20) 2.1. If present, recalibrate the limits 2.2. If absent, move to step 3 3. Check for power LEDs on the foot ACB 3.1. If present: 3.1.1. Check for 24VDC when you press the function button 3.1.2. Move to step 4 3.2. If absent, check cabling from the MCU to the ACB 4. Replace the actuator
No lift (head/foot) movement	1. Check the motion interrupt pan (only for no downward motion) 2. Check lift actuator cables and connections 3. Check for forced motion through *Actuator maintenance* (page 20) 3.1. If present, recalibrate the limits 3.2. If absent, move to step 3 4. Check for power LEDs on the lift ACB 4.1. If present: 4.1.1. Check for 24VDC when you press the function button 4.1.2. Move to step 5 4.2. If absent, check cabling from the MCU to the ACB 5. Replace the actuator

Electrical diagram

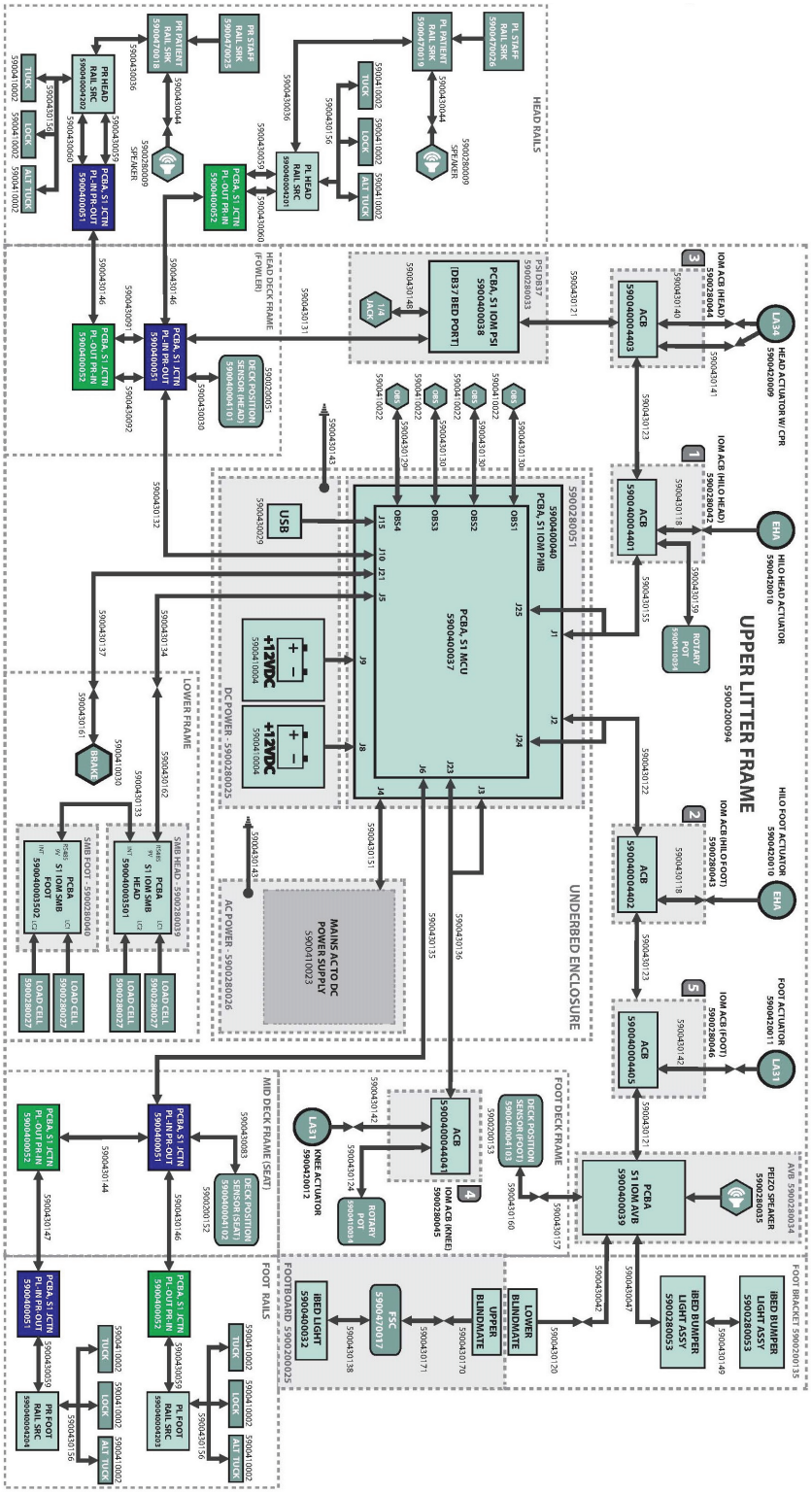

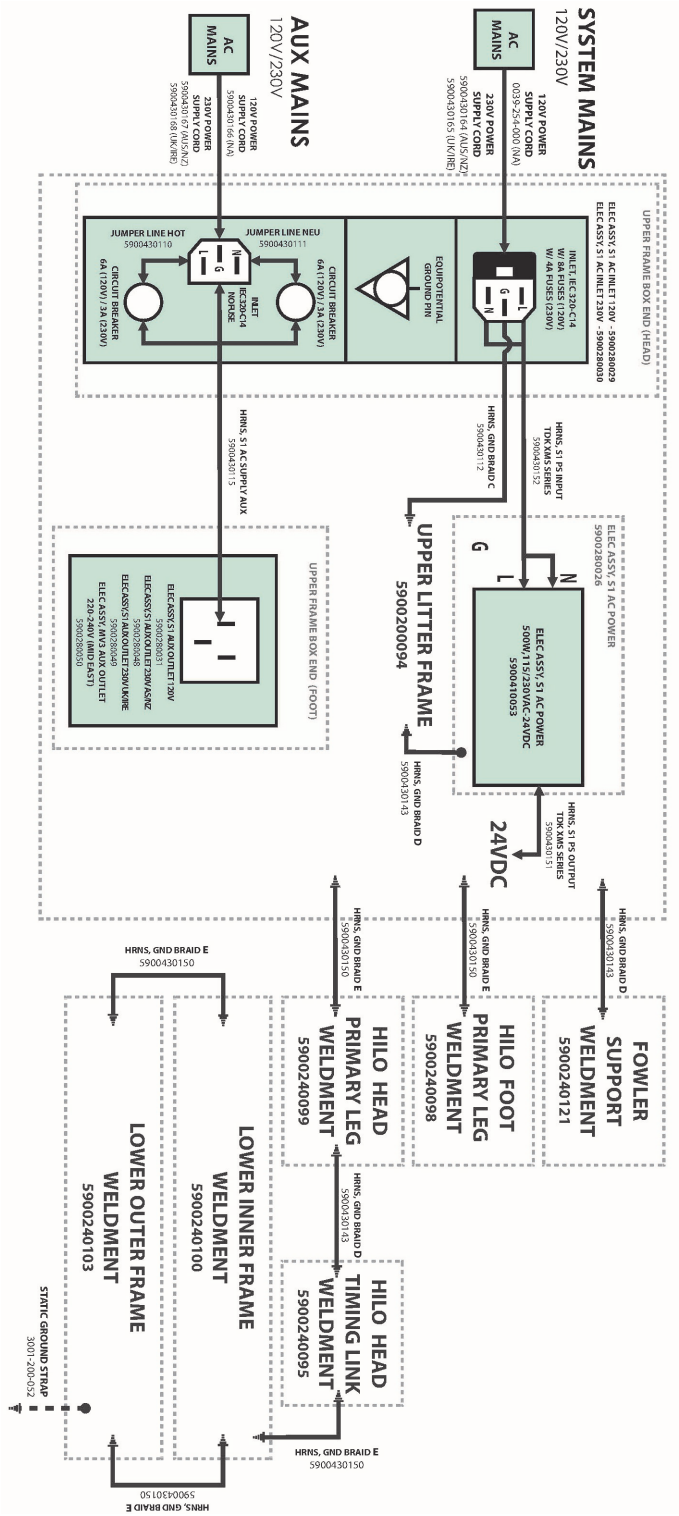
SYSTEM MAINS
120V/230V
AC MAINS
120V POWER SUPPLY CORD
0039-254-000 (NA)
230V POWER SUPPLY CORD
5900430164 (AUS/NZ)
5900430165 (UK/IRE)
UPPER FRAME BOX END (HEAD)
ELEC ASSY, S1 AC INLET 120V - 5900280029
ELEC ASSY, S1 AC INLET 230V - 5900280030
INLET IEC320-C14
W/ 8A FUSES (120V)
W/ 4A FUSES (230V)
EQUIPOTENTIAL GROUND PIN
CIRCUIT BREAKER
6A (120V) / 3A (230V)
JUMPER LINE NEU
5900430111
JUMPER LINE HOT
5900430110
INLET
IEC320-C14
NO FUSE
CIRCUIT BREAKER
6A (120V) / 3A (230V)
HRNS, GND BRAID C
5900430112
HRNS, S1 PS INPUT
TDK XMS SERIES
5900430132
ELEC ASSY, S1 AC POWER
5900280026
ELEC ASSY, S1 AC POWER
500W, 115/230VAC-24VDC
5900410953
UPPER LITTER FRAME
5900200094
HRNS, GND BRAID D
5900430143
HRNS, S1 PS OUTPUT
TDK XMS SERIES
5900430151
24VDC
AUX MAINS
120V/230V
AC MAINS
120V POWER SUPPLY CORD
5900430166 (NA)
230V POWER SUPPLY CORD
5900430167 (AUS/NZ)
5900430168 (UK/IRE)
HRNS, S1 AC SUPPLY AUX
5900430115
UPPER FRAME BOX END (FOOT)
ELEC ASSY, S1 AUX OUTLET 120V
5900280031
ELEC ASSY, S1 AUX OUTLET 230V AS/NZ
5900280048
ELEC ASSY, S1 AUX OUTLET 230V UK/IRE
5900280047
ELEC ASSY, AV13 AUX OUTLET
220-240V (MID EAST)
5900280050
HRNS, GND BRAID D
5900430143
FOWLER SUPPORT WELDMENT
5900240121
HRNS, GND BRAID E
5900430150
HILO FOOT PRIMARY LEG WELDMENT
5900240098
HRNS, GND BRAID E
5900430150
HILO HEAD PRIMARY LEG WELDMENT
5900240099
HRNS, GND BRAID D
5900430143
HILO HEAD TIMING LINK WELDMENT
5900240095
HRNS, GND BRAID E
5900430150
HRNS, GND BRAID E
5900430150
LOWER INNER FRAME WELDMENT
5900240100
LOWER OUTER FRAME WELDMENT
5900240103
HRNS, GND BRAID E
5900430150
STATIC GROUND STRAP
3001-200-052

Cable routing

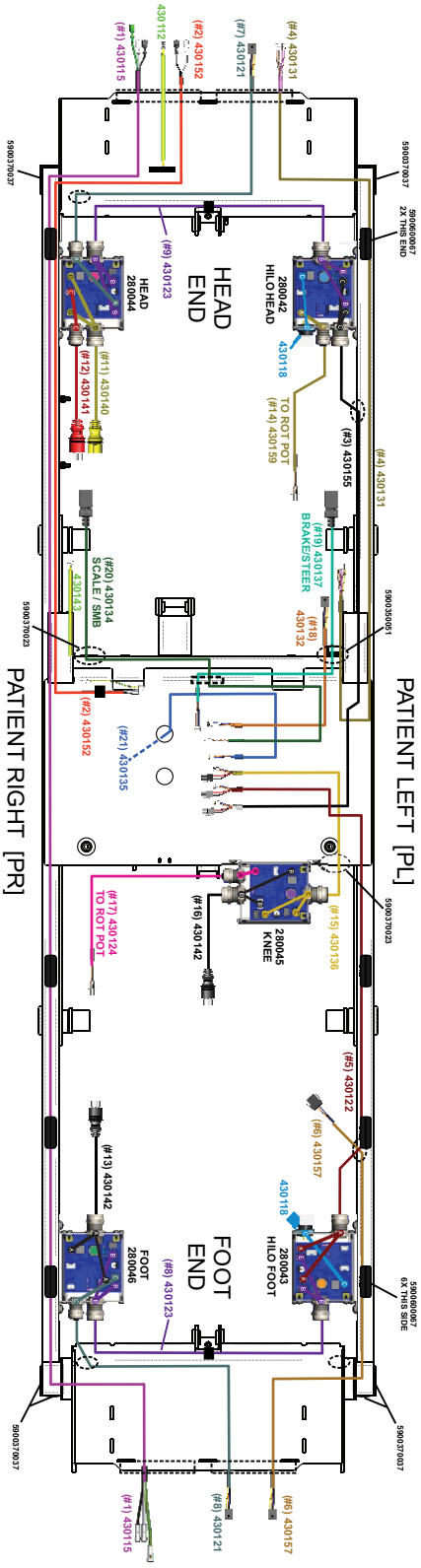

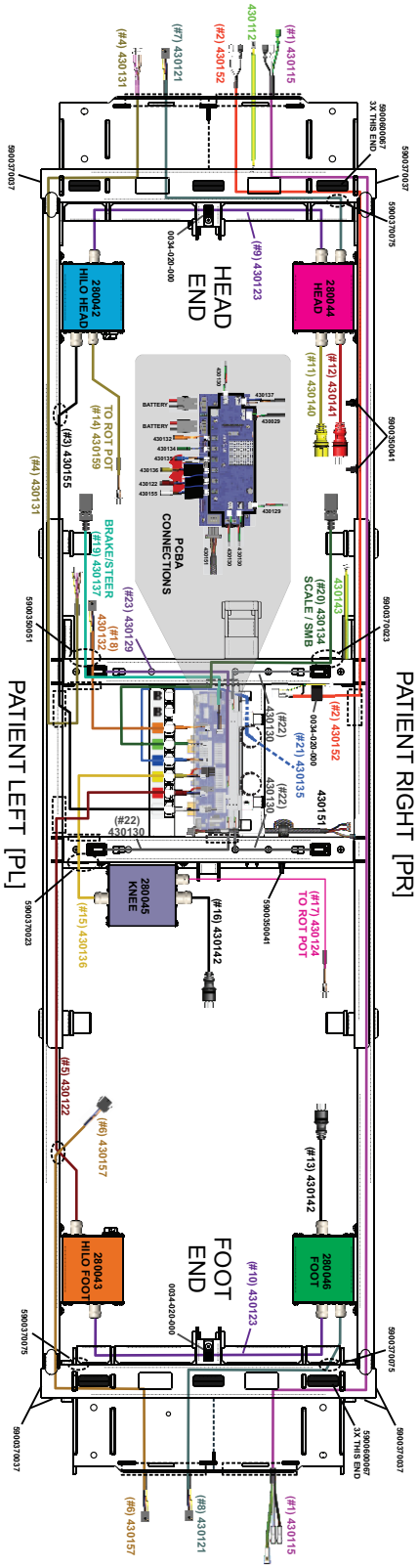
PATIENT RIGHT [PR]
PATIENT LEFT [PL]
HEAD END
FOOT END
280044 HEAD
280042 HILO HEAD
280045 KNEE
280046 FOOT
280043 HILO FOOT
PCBA CONNECTIONS
BATTERY
BATTERY
SCALE / SMB
BRAKE/STEER
TO ROT POT
TO ROT POT
3X THIS END
3X THIS END
(#1) 430115
(#2) 430152
(#4) 430131
(#7) 430121
(#8) 430123
(#11) 430140
(#12) 430141
(#20) 430134
(#21) 430135
(#22) 430130
(#23) 430129
(#3) 430155
(#19) 430137
(#18) 430132
(#17) 430124
(#16) 430142
(#15) 430136
(#5) 430122
(#6) 430157
(#13) 430142
(#10) 430123
(#8) 430121
(#6) 430157
(#1) 430115
0034-020-000
430151
590037037
590037075
590350041
590037023
590350051
590037037
590037075
590037037
590037075
590037037

Policy settings

Policy settings provides access to the hospital or ward settings.

To access the policy settings from the home screen:

1. On the footboard control panel, press **Enter** to access the **Settings** menu.
2. Highlight **Policy settings** and press **Enter**.
3. Use the up and down arrow buttons to highlight each number.
4. Press **Enter** to increase the number.

   Note - The number will increase to 9 until it resets to 0.
5. The policy settings code is as follows: 7, 6, 5
6. Highlight **Proceed** and press **Enter** to access the policy settings.

Maintenance menu

The maintenance menu provides access to the following settings:

- Language
- Zone of operation
- Actuator maintenance
- Scale maintenance
- Angle maintenance
- Width maintenance
- Patient station
- Maintenance log
- Clear maintenance log
- Test modes
- Battery maintenance
- 230V bed configuration

To access the maintenance menu from the home screen:

1. On the footboard control panel, press **Enter** to access the **Settings** menu.
2. Highlight **Maintenance** and press **Enter**.
3. Use the up and down arrow buttons to highlight each number.
4. Press **Enter** to increase the number.

   Note - The number will increase to 9 until it resets to 0.
5. The maintenance code is as follows: 2, 4, 6
6. Highlight **Proceed** and press **Enter** to access the maintenance menu.

Language

To change the display language:

1. Enter the *Maintenance menu* (page 20).
2. Highlight **Language** and press **Enter**.
3. Highlight the desired language and press **Enter**.

Actuator maintenance

CAUTION - Always make sure that the product is clear of obstacles before you use motion functions.

Actuator maintenance allows you to bypass the set limits of the product actuators for testing and troubleshooting.

To access actuator maintenance:

1. Enter the *Maintenance menu* (page 20).
2. Highlight **Actuator maint.** and press **Enter**.
3. In actuator maintenance you will see the following options:
   - Both hilos up
   - Both hilos down
   - Hilo foot up
   - Hilo foot down
   - Hilo head up
   - Hilo head down
   - Foot up
   - Foot down

- Head up
- Head down
- Knee up
- Knee down

4. Use the up and down arrow buttons to highlight a movement and press and hold **Enter** to move the actuator.

Scale maintenance

Scale maintenance provides access to the following:

- Gross weight
- Net weight
- Center of gravity
- Load cells foot end
- Load cells head end
- Enable NAWI Scale
- Zone of operation
- Calibrate scale

To access scale maintenance:

1. Enter the *Maintenance menu* (page 20).
2. Highlight **Scale maint.** and press **Enter**.
3. Use the up and down arrow buttons to highlight each number.
4. Press **Enter** to increase the number.

   Note - The number will increase to 9 until it resets to 0.
5. The scale maintenance code is as follows:
   - Non-NAWI: 4, 3, 2
   - NAWI: Access is restricted to authorized personnel, contact Stryker technical support for more information (*Contact information* (page 5)).
6. Highlight **Proceed** and press **Enter** to access scale maintenance.

Enable NAWI Scale

Note
- NAWI mode is not valid for beds in North America.
- When NAWI is enabled, the scale system must go through verification of conformity. This must be done by Stryker or another certified body before returning the product to service.

To enable NAWI scale:

1. Enter the *Maintenance menu* (page 20).
2. Enter *Scale maintenance* (page 21).
3. Highlight **Enable NAWI Scale** and press **Enter**.
4. Calibrate the scale system, see *Calibrate scale* (page 22).

   Note - You must calibrate the scale system when you enable NAWI scale.

Zone of operation

Note - The default zone of operation is zone 7.

To check your current zone of operation, see *Maintenance menu* (page 20).

To change the zone of operation:

1. Enter the *Maintenance menu* (page 20).
2. Enter *Scale maintenance* (page 21).
3. Highlight **Zone of operation** and press **Enter** to change the zone of operation.

   Note - The number will increase to 10 until it resets to 1.

Zone 1	Zone 2	Zone 3	Zone 4	Zone 5
9.776-9.784 **9.78**	9.785-9.794 **9.788**	9.795-9.802 **9.798**	9.803-9.809 **9.806**	9.81-9.813 **9.812**
Bolivia Columbia Indonesia Philippines Thailand	Brazil Cuba Mexico Saudi Arabia Taiwan	Egypt India Kuwait	Argentina Australia China Cyprus South Africa	Greece Japan South Korea

Zone 6	Zone 7	Zone 8	Zone 9	Zone 10
9.814-9.818 **9.816**	9.819-9.825 **9.82**	9.826-9.833 **9.829**	9.834-9.843 **9.836**	9.844-9.851 **9.847**
Northern Ireland Portugal Republic of Ireland	Italy Macedonia Michigan, USA New Zealand Spain Turkey	Canada France Switzerland	Belgium England Germany Netherlands Scotland Wales	Denmark Finland Norway Russia Sweden

Calibrate scale

Note
- Make sure that the product litter deck is flat and horizontal before you calibrate the scale.
- When NAWI is enabled, the scale system must go through verification of conformity. This must be done by Stryker or another certified body before returning the product to service.

Tools required:

- NAWI: 91 kg calibrated weight
- Non-NAWI: 200 lb calibrated weight

Procedure:

1. Raise the product to the highest height position.
2. Enter the *Maintenance menu* (page 20).
3. Enter *Scale maintenance* (page 21).
4. Highlight **Calibrate scale** and press **Enter**.
5. Remove all weight from the product and press **Enter**.

   Note - All weight includes the mattress, headboard, footboard, and accessories.
6. Place the calibrated weight at the head left outer corner and press **Enter**.
   Note
   - Do not touch the product during calibration.
   - Make sure that the product is not against a wall during calibration.
7. Place the calibrated weight at the foot left outer corner and press **Enter**.
8. Place the calibrated weight at the foot right outer corner and press **Enter**.
9. Place the calibrated weight at the head right outer corner and press **Enter**.
10. The product screen displays **Complete** and sends you to the scale maintenance menu when calibration is complete.

Angle maintenance

Angle maintenance provides access to the following:

- Foot hilo angle (counts)
- Head hilo angle (counts)
- Foot act position (counts)
- Head act position (counts)
- Knee act position (counts)
- Inclinometer
- Calibrate angles

To access angle maintenance:

1. Enter the *Maintenance menu* (page 20).
2. Highlight **Angle maint.** and press **Enter**.

Calibrate angles

CAUTION

- Always calibrate the product angles when you replace the main control board or any actuator or product damage may occur.
- Always make sure that the product is clear of obstacles before you use motion functions.

Note

- Make sure that the product is on a level floor before you calibrate the angles.
- Make sure that the product litter deck is flat and horizontal before you calibrate the angles.

Calibrate angles allows you to set the motion limits for the product actuators.

To calibrate the angles:

1. Enter the *Maintenance menu* (page 20).
2. Enter *Angle maintenance* (page 23).
3. Highlight **Calibrate angles** and press **Enter**.
4. Raise the product to high height and press **Enter**.
5. Lower the product to low height and press **Enter**.
6. Lower the product knee and foot actuators and press **Enter**.
7. The product screen displays **Complete** and sends you to the angle maintenance menu when calibration is complete.

Width maintenance

Width maintenance provides access to the following:

- Head State
- Mid State
- Foot State
- Head raw position
- Mid raw position
- Foot raw position
- Calibrate deck widths
- Trim Foot
- Trim Mid
- Trim Head

To access width maintenance:

1. Enter the *Maintenance menu* (page 20).
2. Highlight **Width maint.** and press **Enter**.

Calibrate deck widths

Note

- Make sure that all siderails are in the full down position when you perform this procedure.
- For this procedure, the term manipulate refers to a back and forth, and side to side motion.

To calibrate the deck widths

1. Enter the *Maintenance menu* (page 20).
2. Enter *Width maintenance* (page 23).
3. Highlight **Calibrate deck widths** and press **Enter**.
4. Put all decks to the 36” position and press **Enter**.
5. Manipulate each deck section on the patient left and right (head to foot) and press **Enter**.
6. Put all decks to the 42” position and press **Enter**.
7. Manipulate each deck section on the patient left and right (head to foot) and press **Enter**.
8. Put all decks to the 48” position and press **Enter**.
9. Manipulate each deck section on the patient left and right (head to foot) and press **Enter**.
10. The product screen displays **Complete** and sends you to the width maintenance menu when calibration is complete.

Patient station

The patient station menu allows the user to set the product to patient station interface.

Patient station provides access to the following settings:

- Priority call (bed exit) on alarm: a priority call (bed exit) will occur at the nursing station on bed exit alarm
- Nurse call on alarm: a nurse call will occur at the nursing station on bed exit alarm
- Priority call (bed exit) on iBed alert a priority call (bed exit) will occur at the nursing station on iBed alert
- Cord out relay closed: set the Cord Out Interlock relay (pins 10 and 11 of the 37 pin port)
- Audio transfer relay closed: set the Audio Transfer Interlock relay (pins 8 and 9 of the 37 pin port)
- Nurse call interlock relay close: set the Nurse Call Interlock relay (pins 7 and 25 of the 37 pin port)
- Select nurse call type: select normally open/closed nurse call

To access the patient station settings:

1. Enter the *Maintenance menu* (page 20).
2. Highlight **Patient station** and press **Enter**.

Test modes

The test mode menu provides access to the following settings:

- Lamp test: turns on all lamps, with either dim or bright backlight
- Siderail display: leaves the siderail angle display on continuously

To access test modes:

1. Enter the *Maintenance menu* (page 20).
2. Highlight **Test modes** and press **Enter**.

Battery maintenance

Battery maintenance provides access to the following:

- Charge state
- PMB Bus V
- PMB IIN
- IBAT
- Battery voltage

To access battery maintenance:

1. Enter the *Maintenance menu* (page 20).
2. Highlight **Battery Maint.** and press **Enter**.

230V or 220V-240V bed configuration

When selected, the product will not switch to battery backup if the product is in motion. This option must be selected if the product is the 230V configuration.

To select 230V or 220V-240V bed configuration:

1. Enter the *Maintenance menu* (page 20).
2. Highlight **230V bed config** and press **Enter**.

   Note - Select the 230V menu option for both 230V and 220V-240V bed options.

Service

Protecting against electrostatic discharge (ESD)

CAUTION

- Always use electrostatic discharge (ESD) protective equipment before you open antistatic bags and service electronic parts.
- Do not place unprotected circuit boards on the floor.

Note - Always ship the circuit boards back to Stryker. Use the antistatic bag that the new board was originally shipped in.

The electronic circuits in the product are completely protected from static electricity damage when factory assembled. Always use adequate static protection when you service the electronic systems of the product. All service personnel must use static protection whenever they touch wires.

Sample antistatic protection equipment includes:

- Antistatic wrist strap
- Grounding plug
- Test lead with a banana plug on one end and an alligator clip on the other end

Make sure that you follow the ESD manufacturer's instructions for appropriate protection against static discharge.

Brake pedal replacement

Tools required:

- Ball peen hammer
- 3/16" roll pin punch

Procedure:

1. Push down on the brake pedal to apply the brake.
2. Using a hammer and punch, drive the roll pin (13) out of the pedal (6) to remove and discard the pedal (6) (Figure 2).
3. Reverse steps to reinstall.
4. Verify proper operation before you return the product to service.

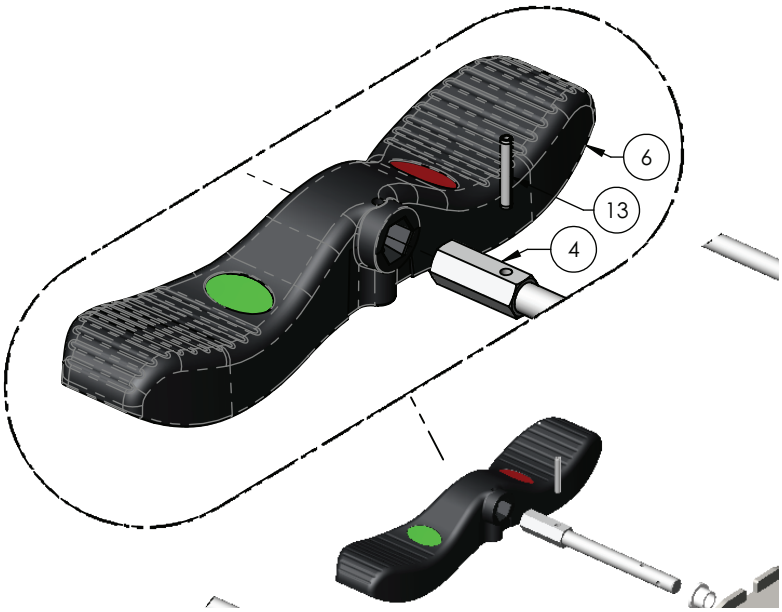

Figure 2 – Brake pedal replacement

Caster replacement

CAUTION

- Always perform this procedure in a secure location with the floor jack secure to the base frame before you remove the caster to prevent the risk of injury.
- Do not put your hands or feet below the caster when you remove or attach the caster to prevent the risk of injury.

Tools required:

- #2 Phillips screwdriver
- Small flat head screwdriver
- 5 mm hex driver
- Torque wrench (in-lb)
- Small floor jack (rated for 900 lb or greater)

Procedure:

1. Unplug the power cord from the wall outlet.
2. On the footboard control panel, press **Enter** to access the **Settings** menu.
3. Highlight **Shutdown** and press **Enter**.
4. Using a small flat head screwdriver, remove and save the four caster cover screw caps (5).
5. Using a #2 Phillips screwdriver, remove and save the four screws (7) that secure the caster cover (8) to the base frame. Remove and save the caster cover (8) (Figure 3).

   Note - Set the brakes to the neutral position.

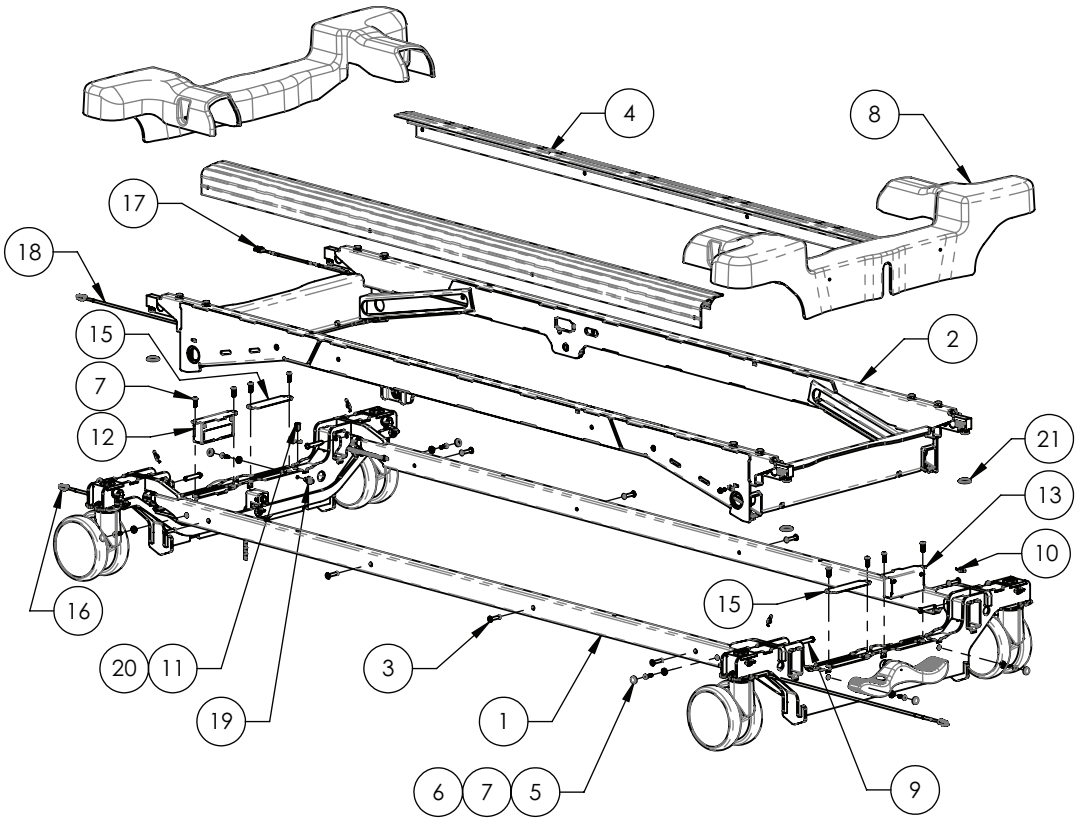

Figure 3 – Caster replacement

6. Using a small floor jack, raise the base frame high enough to remove the caster.

   Note - Position the jack under the base frame closest to the caster you are removing.
7. Using a 5 mm hex driver, remove and save the caster screws (16), lock washers (14), and flat washers (29) (Figure 4). Remove and discard the caster.

   Note - Make sure that you torque the screws (16) to 140-160 in-lb when you reinstall.
8. Reverse steps to reinstall.

   Note - The caster stem has a red and green half (foot end) or a red and gray half (head end). Face the red half of the caster stem toward the foot end of the bed when you reinstall.
9. Verify proper operation before you return the product to service.

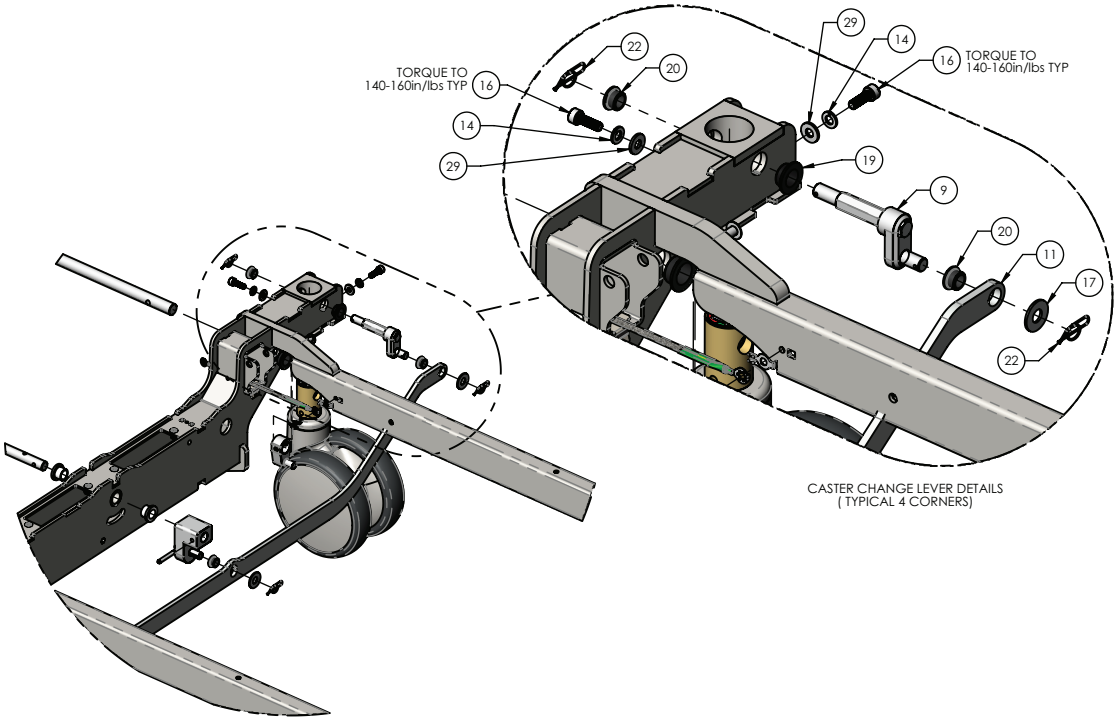

Figure 4 – Caster replacement

Power/accessory cord replacement

Tools required:

- #2 Phillips screwdriver

Procedure:

1. Unplug the power cord from the wall outlet.
2. On the footboard control panel, press **Enter** to access the **Settings** menu.
3. Highlight **Shutdown** and press **Enter**.
4. Push down on the brake pedal to apply the brake.
5. Using a #2 Phillips screwdriver, remove the two screws that secure the power cord strain relief to the litter weldment.
6. Unplug the cord from the head end of the product.
7. Reverse steps to reinstall.

   Note - Make sure that each cord is routed to the right with excess cord length ahead of the clamp (Figure 5).
8. Verify proper operation before you return the product to service.

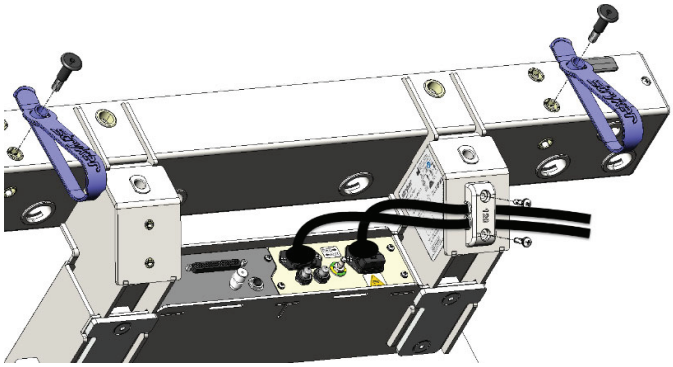

Figure 5 – Cord replacement

Fuse, main power replacement

Procedure:

1. Unplug the power cord from the wall outlet.
2. On the footboard control panel, press **Enter** to access the **Settings** menu.
3. Highlight **Shutdown** and press **Enter**.
4. Push down on the brake pedal to apply the brake.
5. Unplug the power cord from the head end of the product.
6. Squeeze the fuse holder lock tab to unlock the fuse holder (5) (Figure 6).
7. Remove the fuse holder (5) and replace the needed fuse (12) (Figure 6).
8. Reverse steps to reinstall.
9. Verify proper operation before you return the product to service.

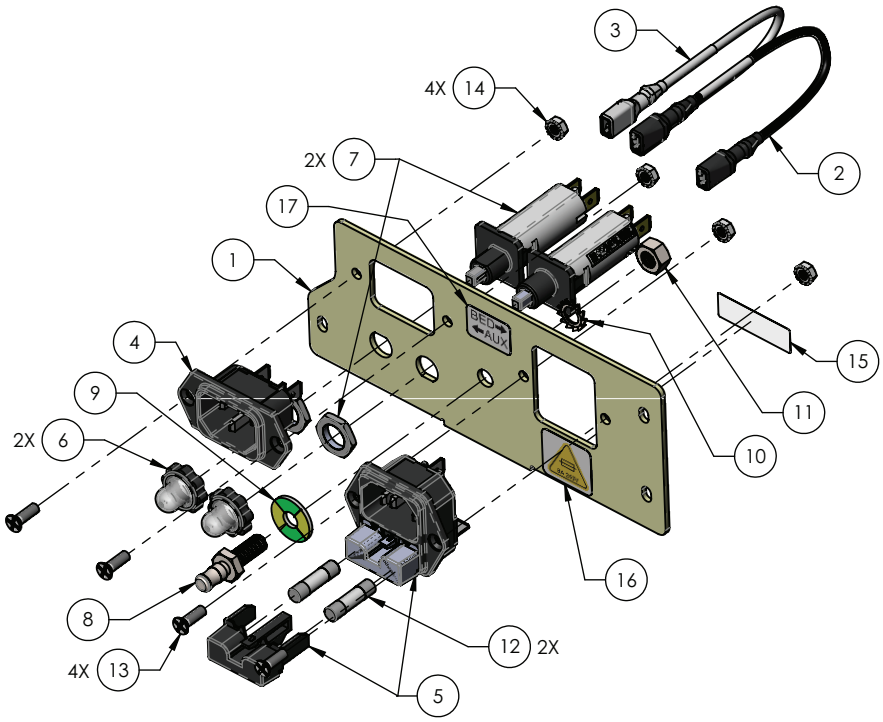

Figure 6 – Fuse replacement

Power inlet, main power/accessory replacement

Tools required:

- #2 Phillips screwdriver
- 5/16” nut driver

Procedure:

1. Unplug the power cord from the wall outlet.
2. On the footboard control panel, press **Enter** to access the **Settings** menu.
3. Highlight **Shutdown** and press **Enter**.
4. Push down on the brake pedal to apply the brake.
5. Using a #2 Phillips screwdriver, remove and save the three screws (13) that secure the power inlet assembly (5) to the litter weldment and pull the assembly outward (Figure 7).
6. Grasp each of the three wires of the power inlet (5) while depressing the locking tab and pull straight out from the power inlet (Figure 7).
7. Using a #2 Phillips screwdriver and 5/16” nut driver, remove and save the two screws (13) that secure the power inlet (5) to the mounting plate (1). Remove and discard the power inlet (Figure 7).
8. Reverse steps to reinstall.
9. Verify proper operation before you return the product to service.

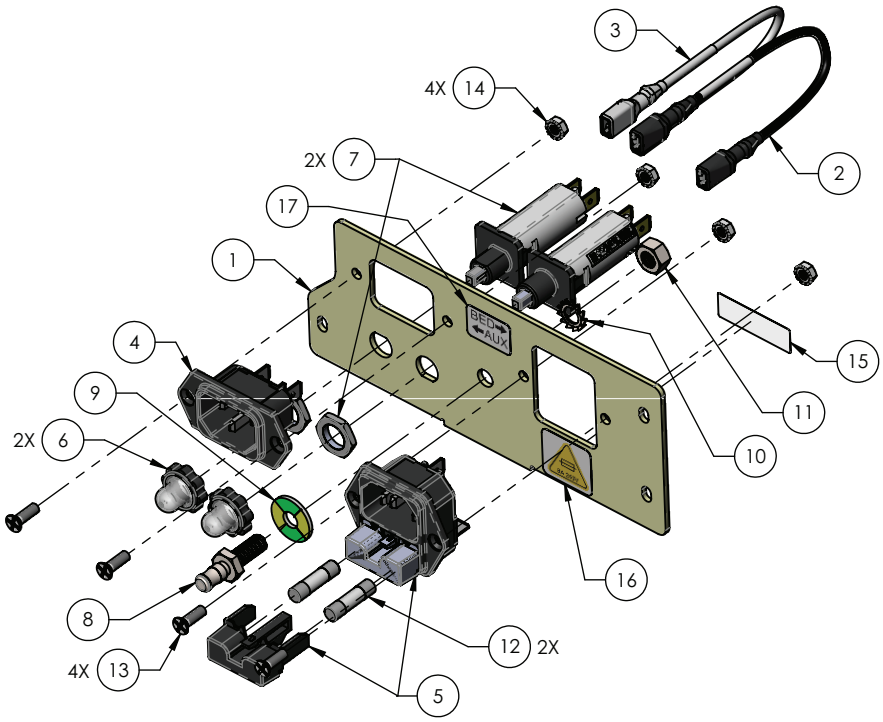

Figure 7 – Power inlet replacement

Auxiliary power outlet replacement

Tools required:

- #2 Phillips screwdriver

Procedure:

1. Unplug the power cord from the wall outlet.
2. On the footboard control panel, press **Enter** to access the **Settings** menu.
3. Highlight **Shutdown** and press **Enter**.
4. Push down on the brake pedal to apply the brake.
5. Using a #2 Phillips screwdriver, remove the three screws that secure the auxiliary power outlet assembly to the litter and pull the assembly outward.
6. Disconnect the quick connectors to remove the auxiliary power outlet assembly from the product power cable. Discard the assembly.
7. Reverse steps to reinstall.
8. Verify proper operation before you return the product to service.

Battery replacement

Tools required:

- 5/32” hex driver
- #2 Phillips screwdriver
- 3/8” nut driver

Procedure:

1. Raise the product to the highest height position.
2. Unplug the power cord from the wall outlet.
3. On the footboard control panel, press **Enter** to access the **Settings** menu.
4. Highlight **Shutdown** and press **Enter**.
5. Push down on the brake pedal to apply the brake.
6. Using a 5/32” hex driver, remove and save the two screws (43) and flat washers (44) that secure the motion interrupt pan (45) to the litter frame. Remove and save the motion interrupt pan (45) (Figure 8).

7. Using a #2 Phillips screwdriver, remove and save the two screws (17) from the battery mounting bracket closest to the center of the bed (Figure 8).
8. Using a #2 Phillips screwdriver while supporting the battery mounting bracket with one hand, remove and save the two screws (17) from the battery mounting bracket closest to the outside of the bed (Figure 8).
9. Hinge the batteries down.
10. Unplug the two battery supply cables from the main control board assembly.
11. Unplug the USB cable from the main control board.
12. Using a 3/8” nut driver, remove and save the nut that secures the ground cable to the battery mounting plate.
13. Lift up to remove and discard the battery mounting plate assembly (14) from the litter frame.
14. Reverse steps to reinstall.
15. Plug the power cord into the wall outlet and allow the batteries to charge for 12 hours.
16. Verify proper operation before you return the product to service.

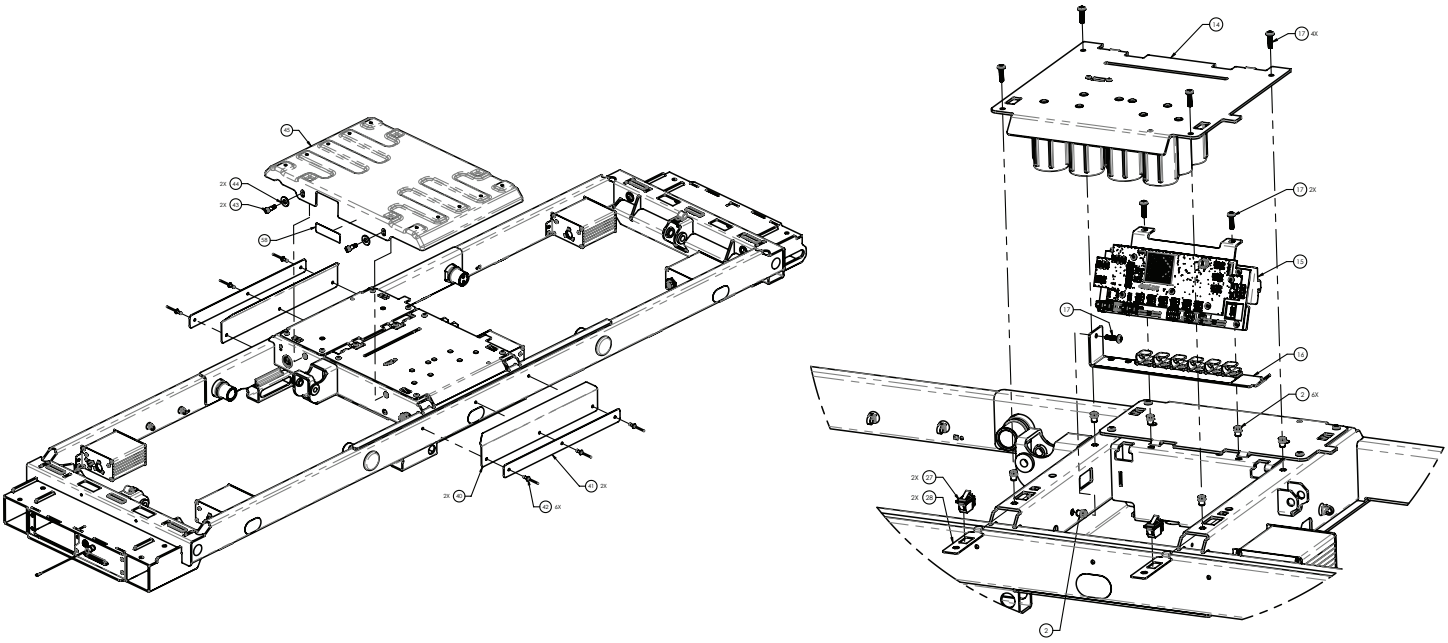

Figure 8 – Battery replacement

Power supply replacement

Tools required:

- 5/32” hex driver
- #2 Phillips screwdriver
- 3/8” nut driver

Procedure:

1. Raise the product to the highest height position.
2. Unplug the power cord from the wall outlet.
3. On the footboard control panel, press **Enter** to access the **Settings** menu.
4. Highlight **Shutdown** and press **Enter**.
5. Push down on the brake pedal to apply the brake.
6. Using a 5/32” hex driver, remove and save the two screws (43) and flat washers (44) that secure the motion interrupt pan (45) to the litter frame. Remove the motion interrupt pan (45) (Figure 9).
7. Using a #2 Phillips screwdriver, remove and save the two screws (17) from the power supply mounting bracket closest to the center of the bed (Figure 9).
8. Using a #2 Phillips screwdriver while supporting the power supply mounting bracket with one hand, remove and save the two screws (17) from the power supply mounting bracket closest to the outside of the bed (Figure 9).
9. Hinge the power supply down.

10. Unplug the two cables with locking connectors.
11. Using a #2 Phillips screwdriver, remove the screws that secure the red and black DC cables to the AC power supply.
12. Using a 3/8” nut driver, remove the nut that secures the ground cable to the AC power supply mounting bracket.
13. Lift up to remove and discard the power supply assembly (13) from the litter frame (Figure 9).
14. Reverse steps to reinstall.
15. Verify proper operation before you return the product to service.

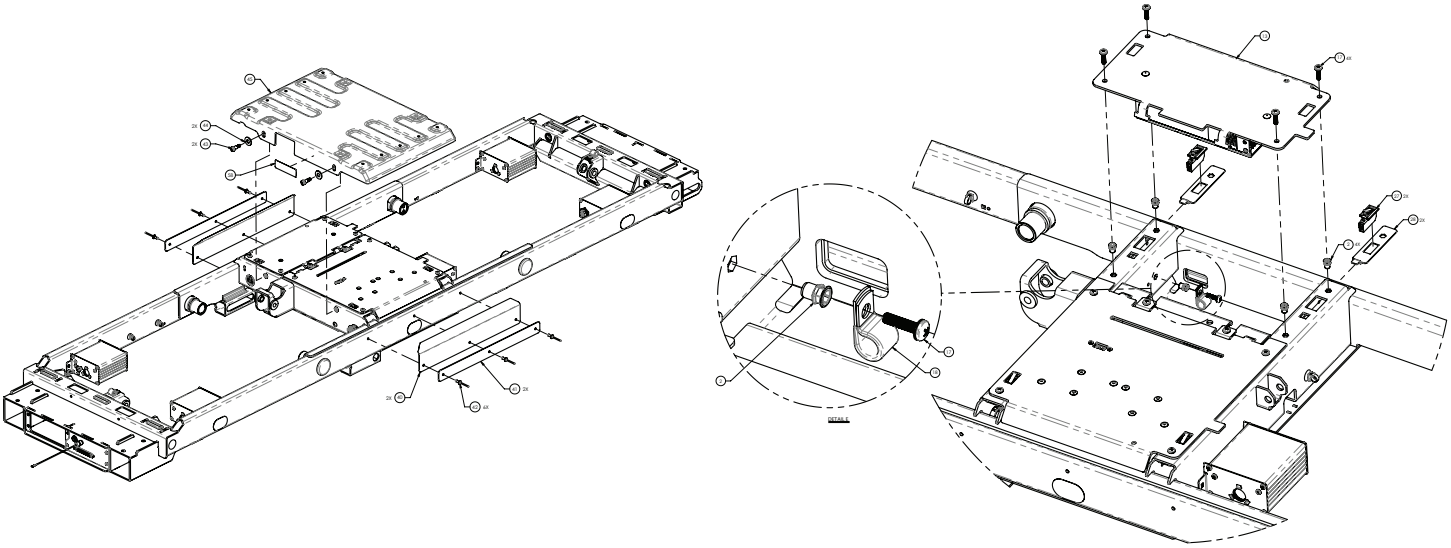

Figure 9 – Power supply replacement

Main control unit (MCU) assembly replacement

Tools required:

- 5/32” hex driver
- #2 Phillips screwdriver
- 3/8” nut driver
- ESD system

Procedure:

1. Raise the product to the highest height position.
2. Unplug the power cord from the wall outlet.
3. On the footboard control panel, press **Enter** to access the **Settings** menu.
4. Highlight **Shutdown** and press **Enter**.
5. Push down on the brake pedal to apply the brake.
6. Using a 5/32” hex driver, remove and save the two screws (43) and flat washers (44) that secure the motion interrupt pan (45) to the litter frame. Remove the motion interrupt pan (45) (Figure 10).
7. Using a #2 Phillips screwdriver, remove and save the two screws (17) from the battery mounting bracket closest to the center of the bed (Figure 10).
8. Using a #2 Phillips screwdriver while supporting the battery mounting bracket with one hand, remove and save the two screws (17) from the battery mounting bracket closest to the outside of the bed (Figure 10).
9. Hinge the batteries down.

CAUTION

- Always use ESD protective equipment before you open antistatic bags and service electronic parts.
- Do not place unprotected circuit boards on the floor.

10. Unplug the two battery supply cables from the MCU assembly.
11. Unplug the USB cable from the MCU assembly.
12. Using a 3/8” nut driver, remove and save the nut that secures the ground cable to the battery mounting plate.

13. Lift up to remove the battery mounting plate assembly (14) from the litter frame (Figure 10).
14. Unplug all cables from the MCU assembly. Make note of the cable labels and plugs.
15. Using a #2 Phillips screwdriver, remove and save the two screws (17) that secure the MCU assembly to the litter frame (Figure 10).
16. Grasp the MCU mounting bracket (15) where you removed the two screws and pull down.
17. Discard the MCU assembly.
18. Reverse steps to reinstall.
19. Calibrate angles, see *Calibrate angles* (page 23).
20. If the product is the 230V or 220V to 240V configuration, see *230V or 220V-240V bed configuration* (page 25).
21. Verify proper operation before you return the product to service.

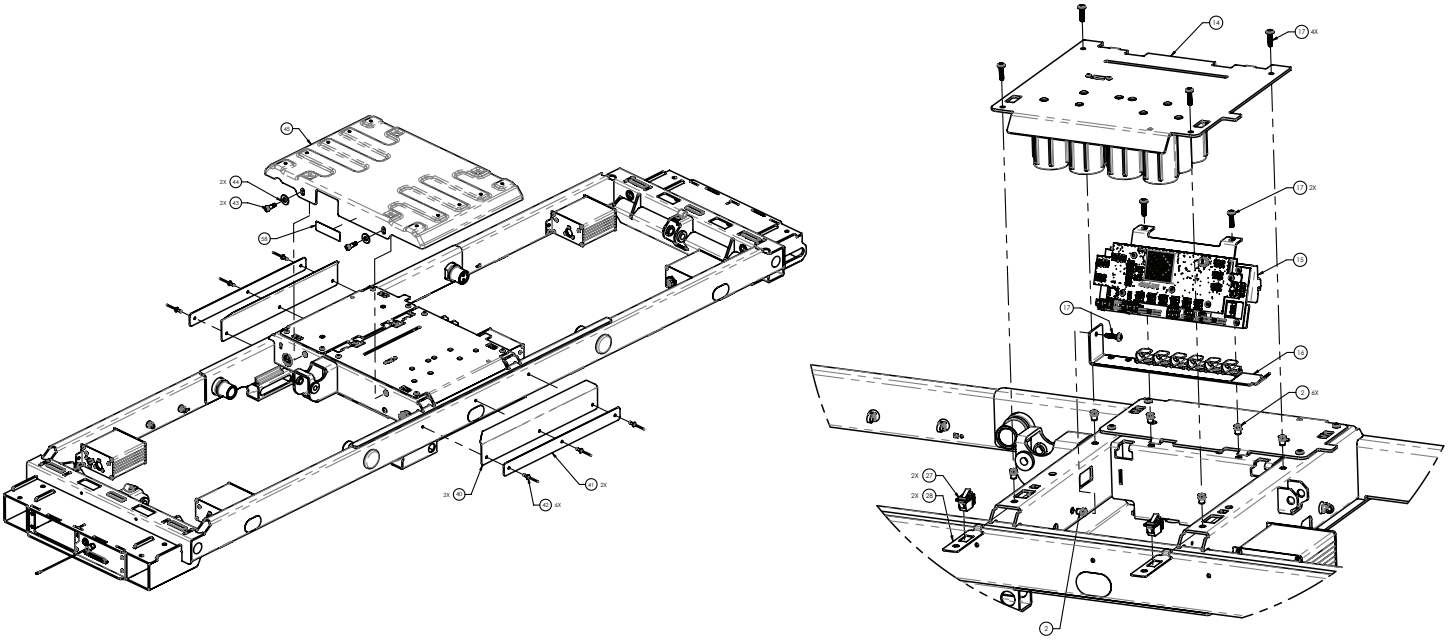

Figure 10 – MCU replacement

Actuator control board (ACB) - Fowler, patient right/Head lift, patient left replacement

Tools required:

- #2 Phillips screwdriver
- ESD system

Procedure:

1. Raise the head lift and Fowler to the highest height position.

   Note - If the head lift and Fowler will not raise, access the ACB under the litter at the Fowler.
2. Unplug the power cord from the wall outlet.
3. On the footboard control panel, press **Enter** to access the **Settings** menu.
4. Highlight **Shutdown** and press **Enter**.
5. Push down on the brake pedal to apply the brake.
6. Raise the head end siderails to the full up and locked position.
7. Using a #2 Phillips screwdriver, remove and save the two screws (17) that secure the ACB assembly to the litter frame (Figure 11).
8. Lift upward on the ACB assembly (20, 21) and unkey from the litter frame (Figure 11).

CAUTION

- Always use ESD protective equipment before you open antistatic bags and service electronic parts.
- Do not place unprotected circuit boards on the floor.

9. Using a #2 Phillips screwdriver, remove and save the four screws (9) that secure the ACB faceplate (2) to the ACB box (Figure 12).

10. Unplug all cables from the ACB. Make note of the cable labels and plugs.
11. Using a #2 Phillips screwdriver, remove and save the two screws (9) that secure the ACB (5) to the ACB box (Figure 12).
12. Discard the ACB.
13. Reverse steps to reinstall.
14. If you replace the Fowler ACB, calibrate angles. See *Calibrate angles* (page 23).
15. Verify proper operation before you return the product to service.

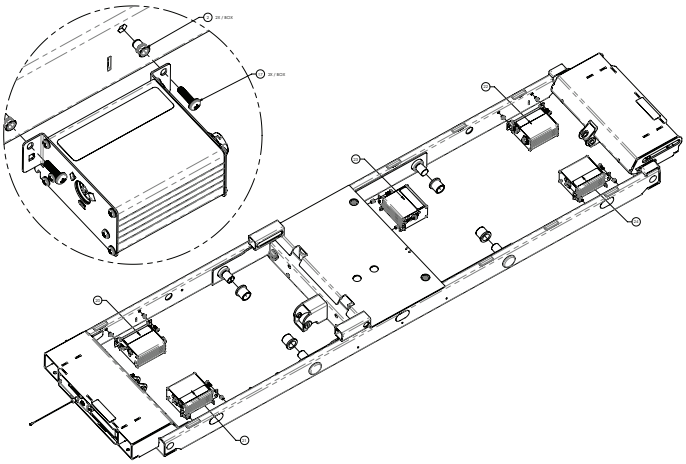

Figure 11 – ACB replacement

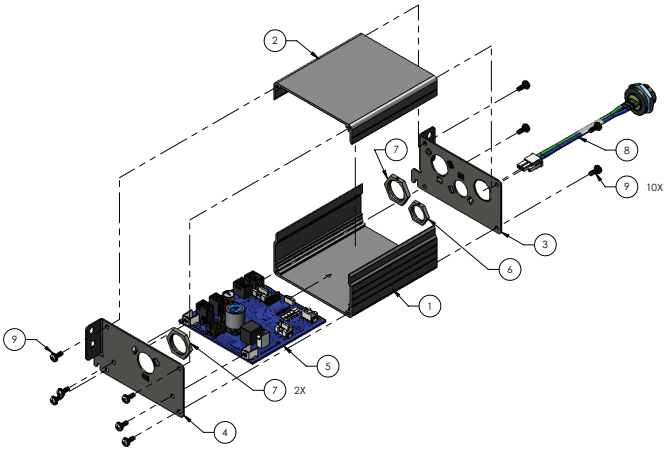

Figure 12 – ACB replacement

Actuator control board (ACB) - knee Gatch, patient left replacement

Tools required:

- #2 Phillips screwdriver
- T40 Torx driver
- Needle nose pliers
- ESD system

Procedure:

1. Fold and secure the mattress toward the Fowler.
2. Raise the knee Gatch to full height.

   Note - If the knee Gatch will not raise, you access the ACB assembly by:

   a. Using needle nose pliers, remove and save the knee Gatch actuator rue ring clip and foot end clevis pin.
   b. Lower the actuator down.
   c. Remove and save the knee Gatch and thigh section clevis pins.
   d. Raise the knee Gatch and thigh section.
3. Unplug the power cord from the wall outlet.
4. On the footboard control panel, press **Enter** to access the **Settings** menu.
5. Highlight **Shutdown** and press **Enter**.
6. Push down on the brake pedal to apply the brake.
7. Using a T40 Torx driver, remove and save the four screws that secure the knee Gatch mattress surface to the knee Gatch litter weldment. Remove and save the knee Gatch mattress surface.
8. Using a T40 Torx driver, remove and save the two screws that secure the thigh mattress surface to the thigh litter weldment. Remove and save the thigh mattress surface.
9. Using a #2 Phillips screwdriver, remove and save the two screws (17) that secure the ACB assembly (23) to the litter frame (Figure 13).

10. Lift upward on the ACB assembly (23) and unkey from the litter frame.

CAUTION

- Always use ESD protective equipment before you open antistatic bags and service electronic parts.
- Do not place unprotected circuit boards on the floor.

11. Using a #2 Phillips screwdriver, remove and save the four screws (9) that secure the ACB faceplate (2) to the ACB box (Figure 12).
12. Unplug all cables from the ACB. Make note of the cable labels and plugs.
13. Using a #2 Phillips screwdriver, remove and save the two screws (9) that secure the ACB (5) to the ACB box (Figure 13).
14. Discard the ACB.
15. Reverse steps to reinstall.
16. Calibrate angles, see *Calibrate angles* (page 23).
17. Verify proper operation before you return the product to service.

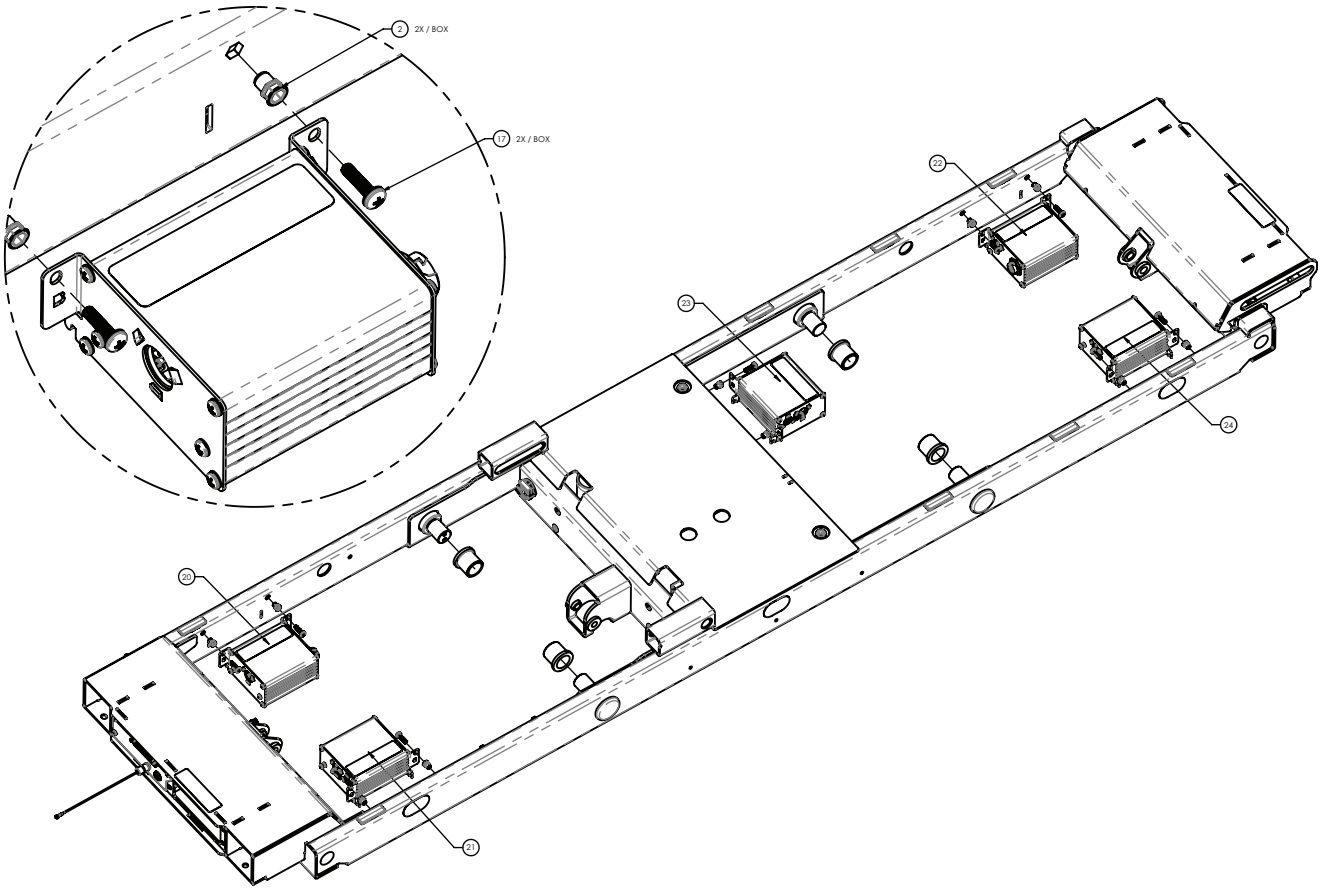

Figure 13 – ACB replacement

Actuator control board (ACB) - Foot, patient right/Foot lift, patient left replacement

Tools required:

- #2 Phillips screwdriver
- T40 Torx driver
- Needle nose pliers
- ESD system

Procedure:

1. Fold and secure the mattress toward the Fowler.
2. Raise the Gatch and thigh to full height.

   Note - If the Gatch or thigh will not raise, you access the ACB assembly by:

a. Using needle nose pliers, remove the knee Gatch actuator rue ring clip and foot end clevis pin.

b. Lower the actuator down.

c. Remove and save the Gatch and thigh section clevis pins.

d. Raise the Gatch and thigh section.

3. Unplug the power cord from the wall outlet.
4. On the footboard control panel, press **Enter** to access the **Settings** menu.
5. Highlight **Shutdown** and press **Enter**.
6. Push down on the brake pedal to apply the brake.
7. Using a T40 Torx driver, remove and save the two screws that secure the thigh mattress surface to the thigh litter weldment. Remove and save the thigh mattress surface.
8. Using a #2 Phillips screwdriver, remove and save the two screws (17) that secure the ACB assembly (22, 24) to the litter frame (Figure 14).
9. Lift upward on the ACB assembly (22, 24) and unkey from the litter frame.

CAUTION

- Always use ESD protective equipment before you open antistatic bags and service electronic parts.
- Do not place unprotected circuit boards on the floor.

10. Using a #2 Phillips screwdriver, remove and save the four screws (9) that secure the ACB faceplate (2) to the ACB box (Figure 12).
11. Unplug all cables from the ACB. Make note of the cable labels and plugs.
12. Using a #2 Phillips screwdriver, remove and save the two screws (9) that secure the ACB (5) to the ACB box (Figure 14).
13. Discard the ACB.
14. Reverse steps to reinstall.
15. If you replace the Foot ACB, calibrate angles. See *Calibrate angles* (page 23).
16. Verify proper operation before you return the product to service.

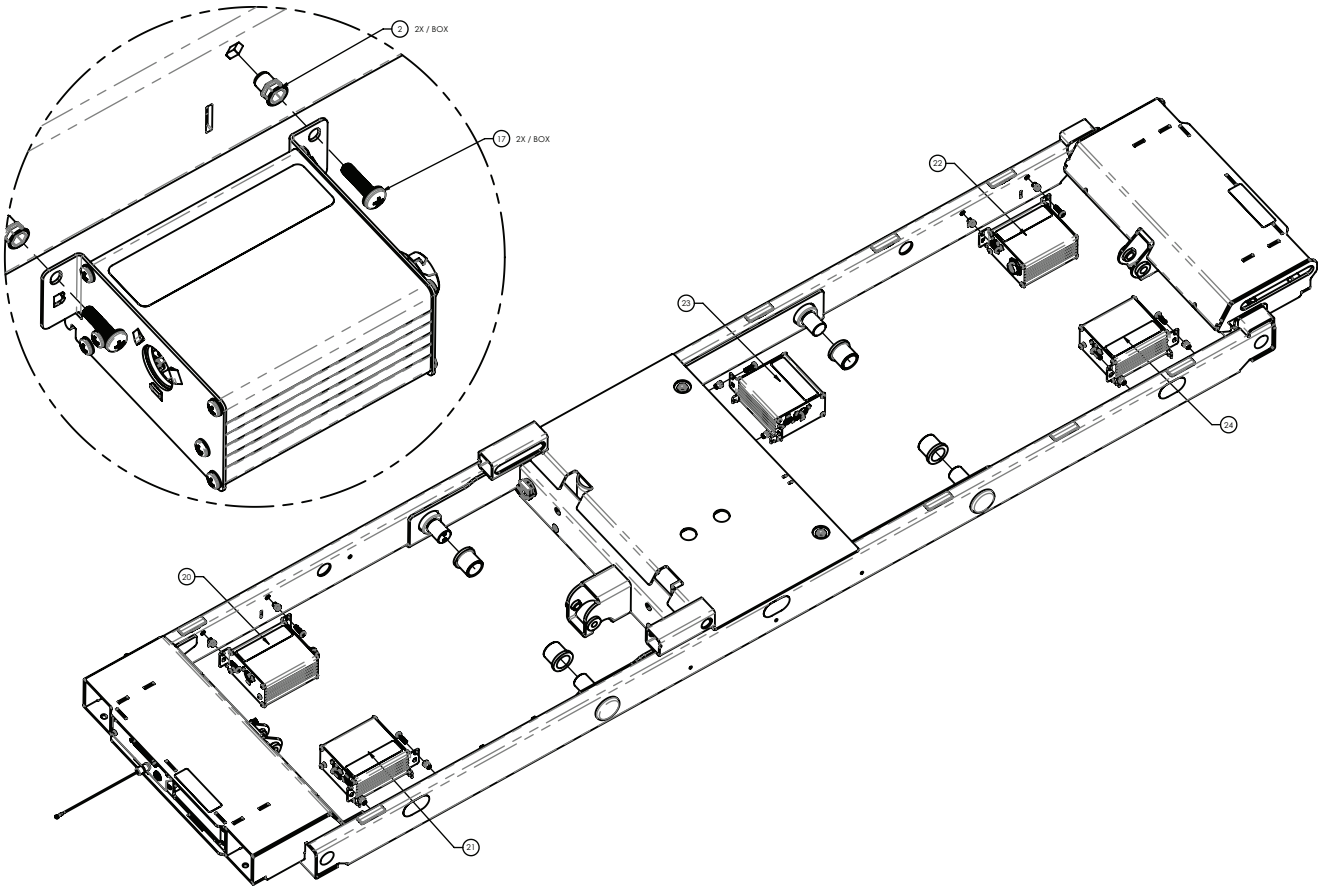

Figure 14 – ACB replacement

Deck position monitor (DPM) board, head replacement

Tools required:

- T40 Torx driver
- T20 Torx driver
- T25 Torx driver
- #2 Phillips screwdriver
- ESD system

Procedure:

1. Raise the product to the highest height position.
2. Place the litter surface in the flat horizontal position.
3. Remove the mattress from the litter surface.
4. Unplug the power cord from the wall outlet.
5. On the footboard control panel, press **Enter** to access the **Settings** menu.
6. Highlight **Shutdown** and press **Enter**.
7. Push down on the brake pedal to apply the brake.
8. Expand all the litter decks to the 48 in. position.
9. Working from the head left, use a T40 Torx driver to remove and save the four screws (26) that secure the Fowler litter surface (10) to the Fowler frame (Figure 15). Remove and save the Fowler litter surface.

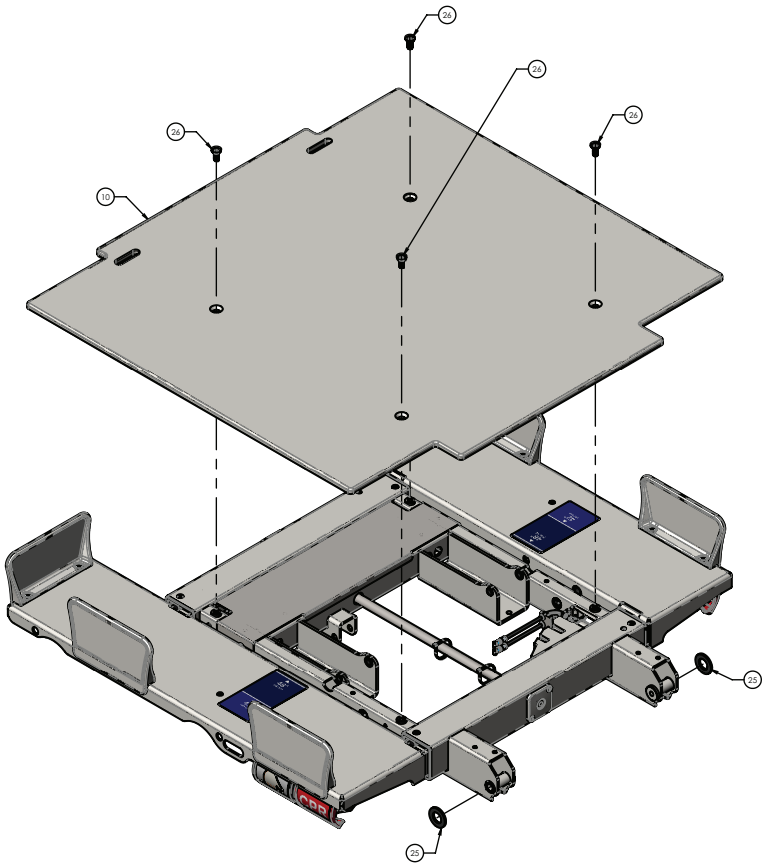

Figure 15 – DPM board replacement, head

10. Using a T25 Torx driver, remove and save the screw (13) that secures the DPM assembly (7) to the Fowler frame (Figure 16).
11. Using a T20 Torx driver, remove and save the two screws (12) that secure the DPM assembly (7) to the Fowler frame (Figure 16).
12. Remove the DPM assembly from the Fowler frame.

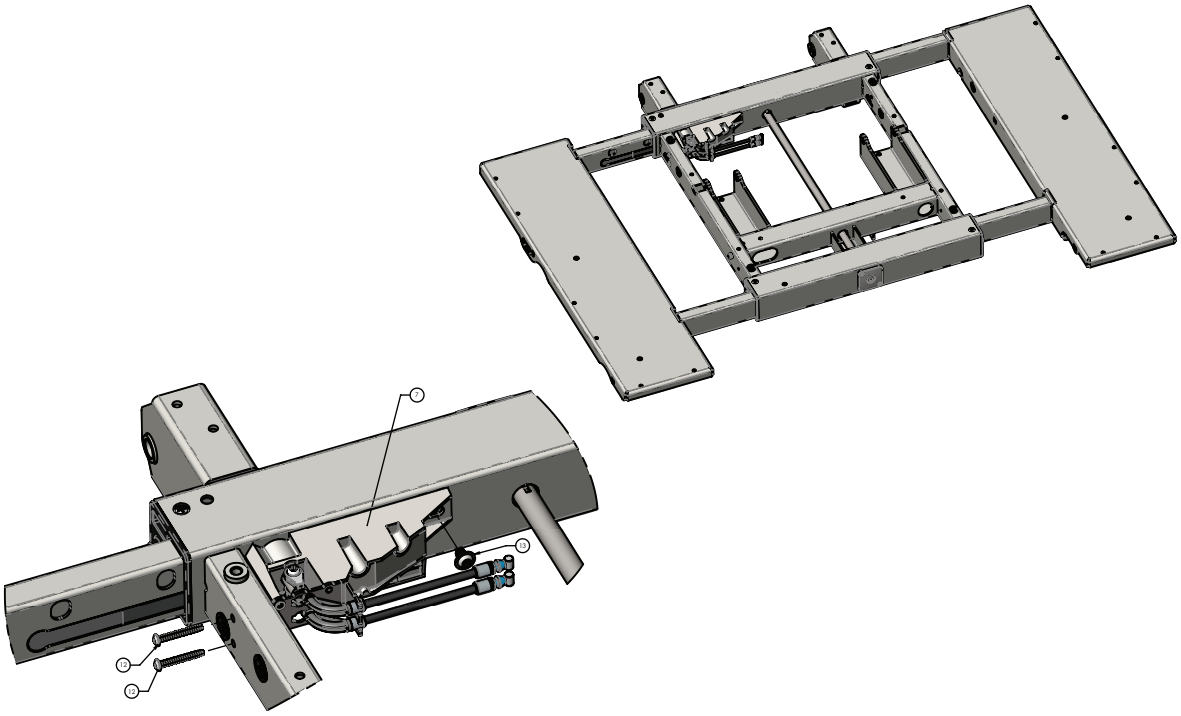

Figure 16 – DPM board replacement, head

13. Using a #2 Phillips screwdriver, remove and save the two screws (9) that secure the DPM cover (2) and remove and save the cover (Figure 17).
14. Using a #2 Phillips screwdriver, remove and save the two screws (9) that secure the DPM board (12) to the DPM assembly (Figure 17).

CAUTION

- Always use ESD protective equipment before you open antistatic bags and service electronic parts.
- Do not place unprotected circuit boards on the floor.

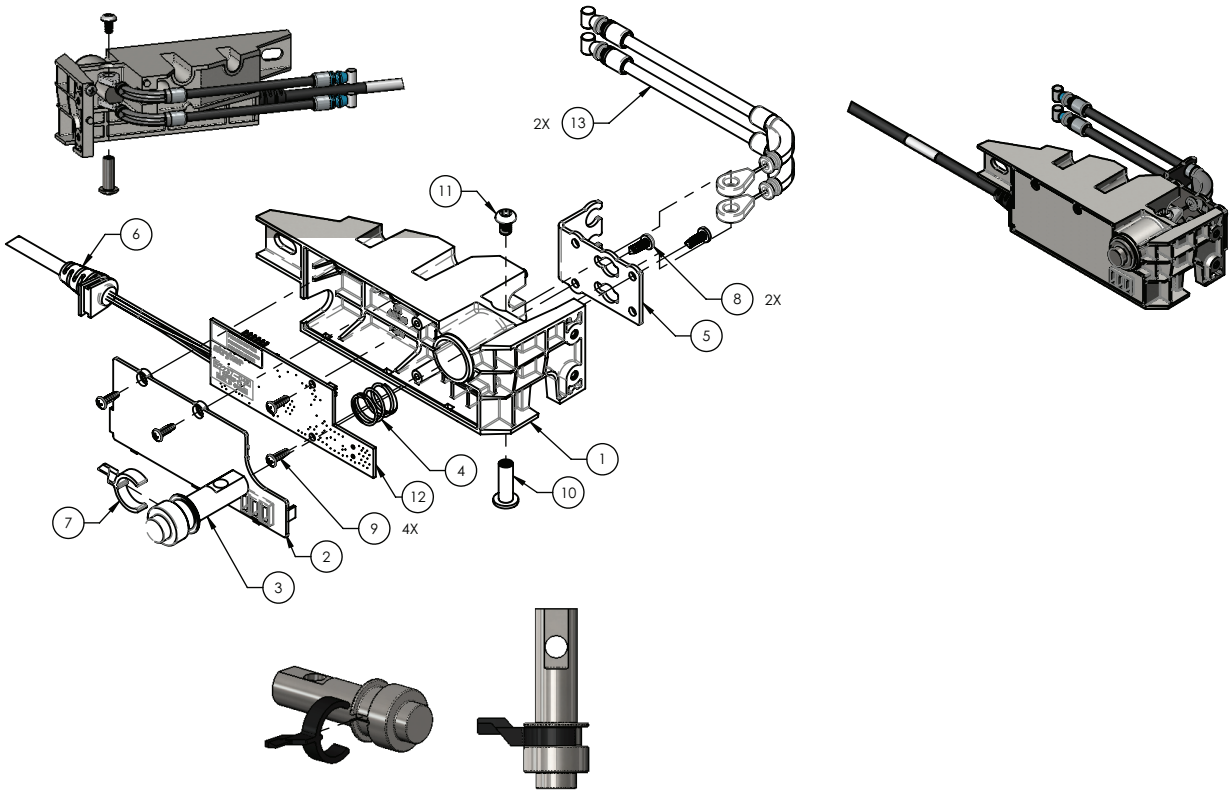

Figure 17 – DPM board replacement, head

15. Unplug all cables from the DPM board. Make note of the cable labels and plugs.
16. Remove and discard the DPM board.
17. Reverse steps to reinstall.
18. Calibrate the deck widths, see *Calibrate deck widths* (page 24).
19. Verify proper operation before you return the product to service.

Deck position monitor (DPM) board, mid replacement

Tools required:

- T40 Torx driver
- T20 Torx driver
- T25 Torx driver
- #2 Phillips screwdriver
- ESD system

Procedure:

1. Raise the product to the highest height position.
2. Place the litter surface in the flat horizontal position.
3. Remove the mattress from the litter surface.
4. Unplug the power cord from the wall outlet.
5. On the footboard control panel, press **Enter** to access the **Settings** menu.
6. Highlight **Shutdown** and press **Enter**.
7. Push down on the brake pedal to apply the brake.
8. Expand all the litter decks to the 48 in. position.
9. Working from the middle right, use a T40 Torx driver to remove and save the two screws (9) that secure the seat deck cover (8) to the seat frame (Figure 18). Remove and save the seat deck cover.

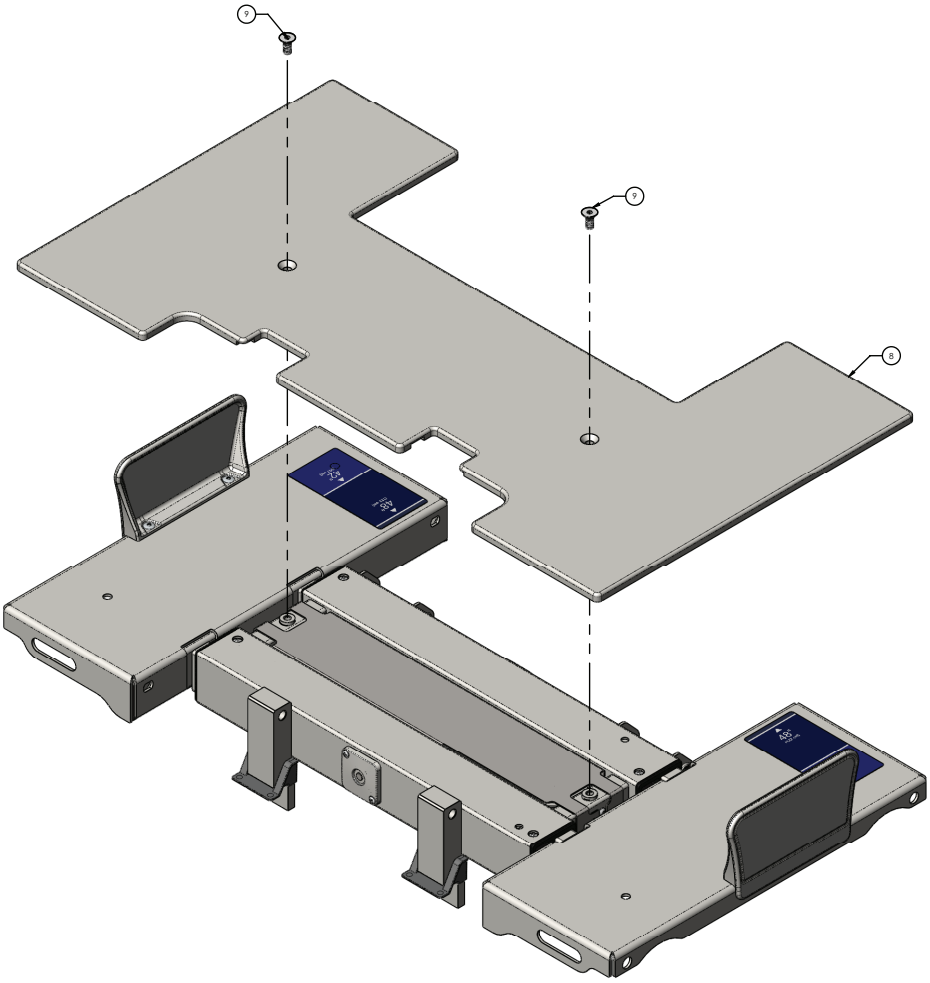

Figure 18 – DPM board replacement, mid

10. Using a T25 Torx driver, remove and save the screw (11) that secures the DPM assembly (25) to the seat frame (Figure 19).
11. Using a T20 Torx driver, remove and save the two screws (10) that secure the DPM assembly (25) to the seat frame (Figure 19).
12. Remove the DPM assembly from the seat frame.

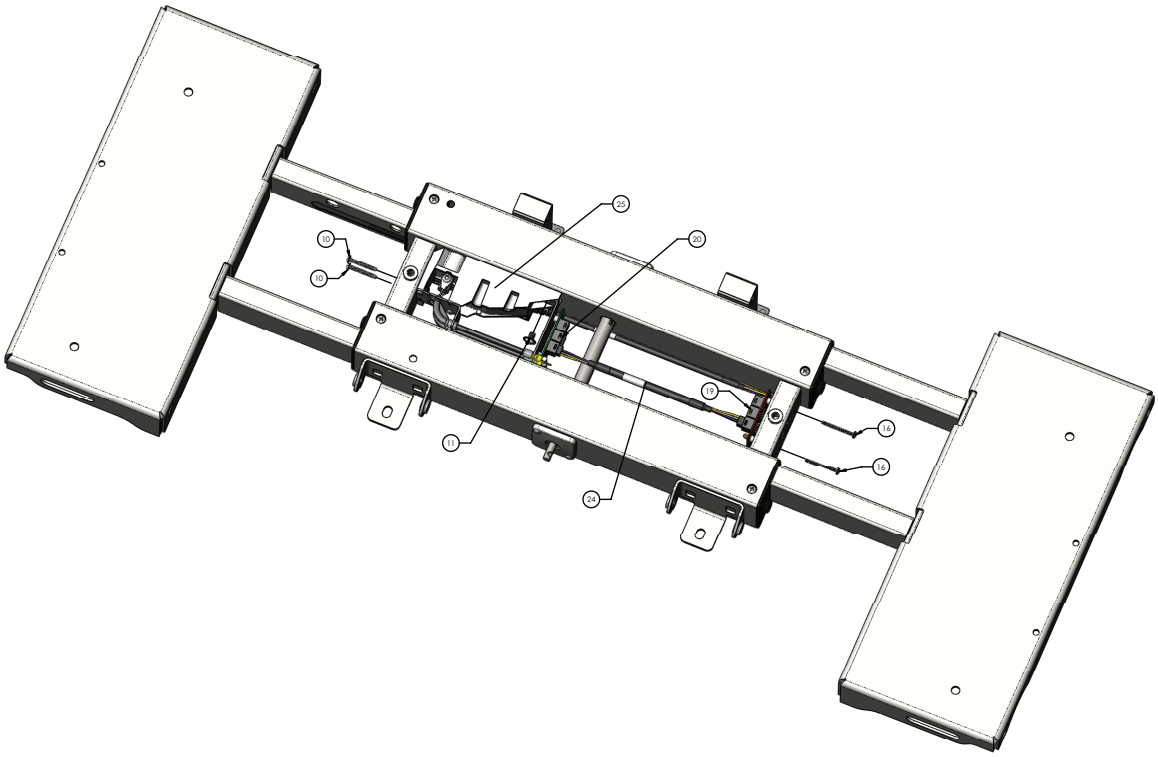

Figure 19 – DPM board replacement, mid

13. Using a #2 Phillips screwdriver, remove and save the two screws (9) that secure the DPM cover (2) and remove and save the cover (Figure 20).
14. Using a #2 Phillips screwdriver, remove and save the two screws (9) that secure the DPM board (12) to the DPM assembly (Figure 20).

CAUTION

- Always use ESD protective equipment before you open antistatic bags and service electronic parts.
- Do not place unprotected circuit boards on the floor.

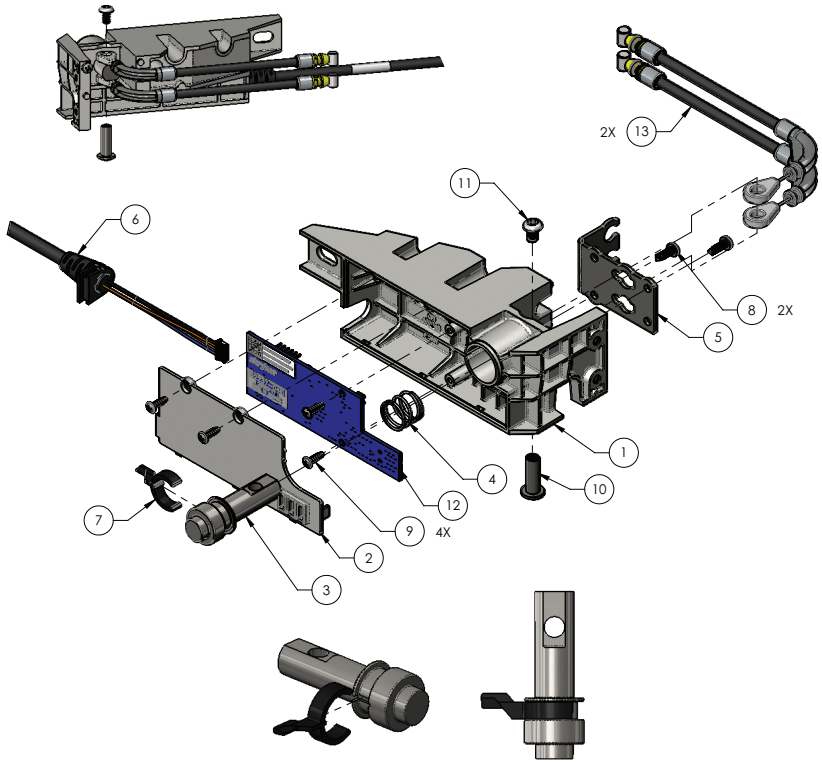

Figure 20 – DPM board replacement, mid

15. Unplug all cables from the DPM board. Make note of the cable labels and plugs.
16. Remove and discard the DPM board.
17. Reverse steps to reinstall.
18. Calibrate the deck widths, see *Calibrate deck widths* (page 24).
19. Verify proper operation before you return the product to service.

Deck position monitor (DPM) board, foot replacement

Tools required:

- T40 Torx driver
- T20 Torx driver
- T25 Torx driver
- #2 Phillips screwdriver
- ESD system

Procedure:

1. Raise the product to the highest height position.
2. Place the litter surface in the flat horizontal position.
3. Remove the mattress from the litter surface.
4. Unplug the power cord from the wall outlet.
5. On the footboard control panel, press **Enter** to access the **Settings** menu.
6. Highlight **Shutdown** and press **Enter**.
7. Push down on the brake pedal to apply the brake.
8. Expand all the litter decks to the 48 in. position.
9. Working from the foot right, use a T40 Torx driver to remove and save the two screws (11) that secure the foot deck cover (8) to the foot frame (Figure 21). Remove and save the foot deck cover.

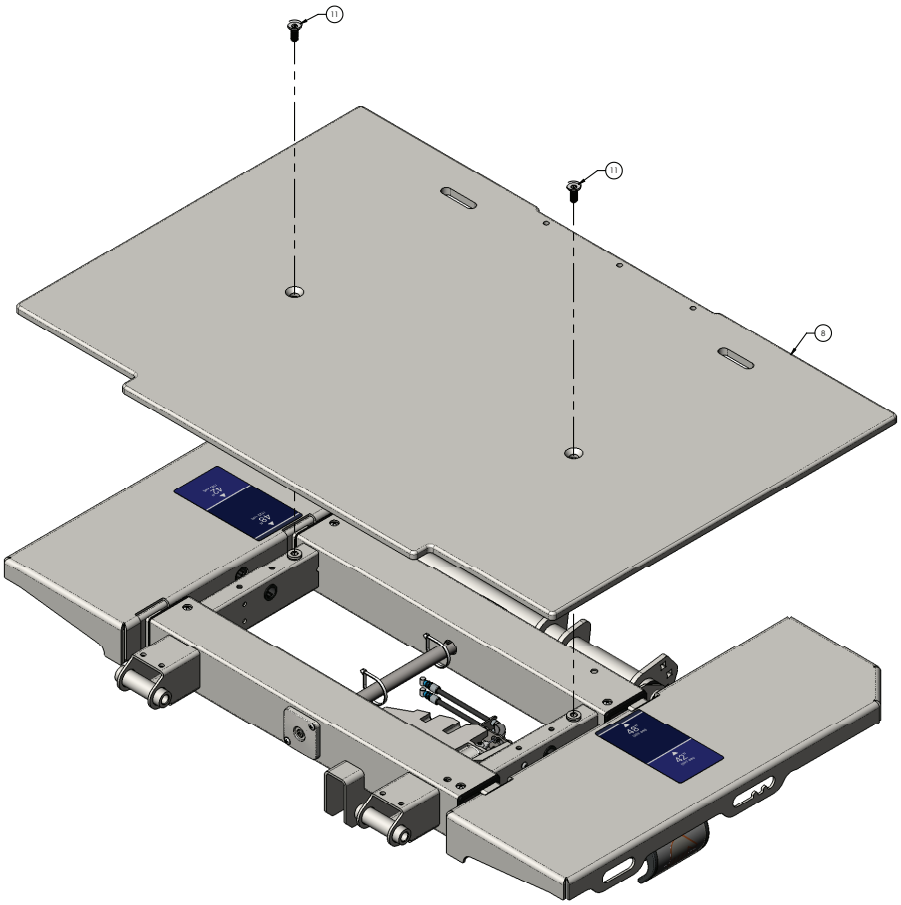

Figure 21 – DPM board replacement, foot

10. Using a T25 Torx driver, remove and save the screw (13) that secures the DPM assembly (7) to the foot frame (Figure 22).
11. Using a T20 Torx driver, remove and save the two screws (12) that secure the DPM assembly (7) to the foot frame (Figure 22).
12. Remove the DPM assembly from the foot frame.

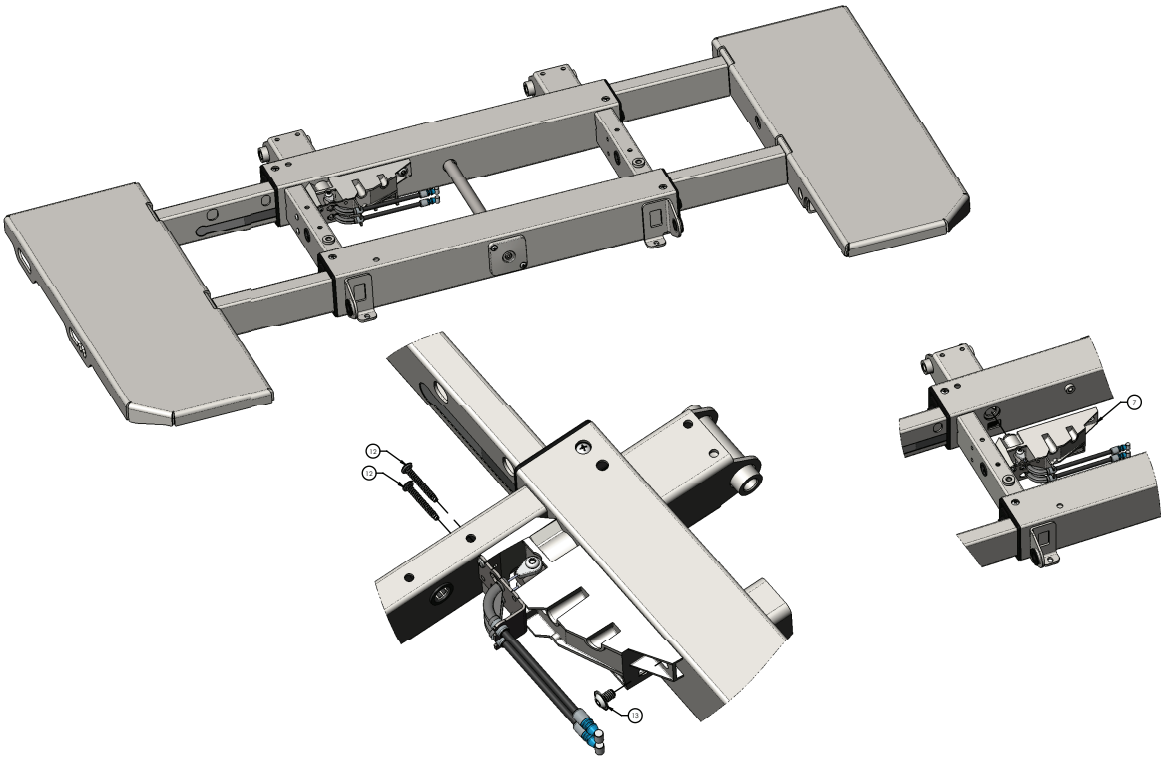

Figure 22 – DPM board replacement, foot

13. Using a #2 Phillips screwdriver, remove and save the two screws (9) that secure the DPM cover (2). Remove and save the cover (Figure 23).
14. Using a #2 Phillips screwdriver, remove and save the two screws (9) that secure the DPM board (12) to the DPM assembly (Figure 23).

CAUTION

- Always use ESD protective equipment before you open antistatic bags and service electronic parts.
- Do not place unprotected circuit boards on the floor.

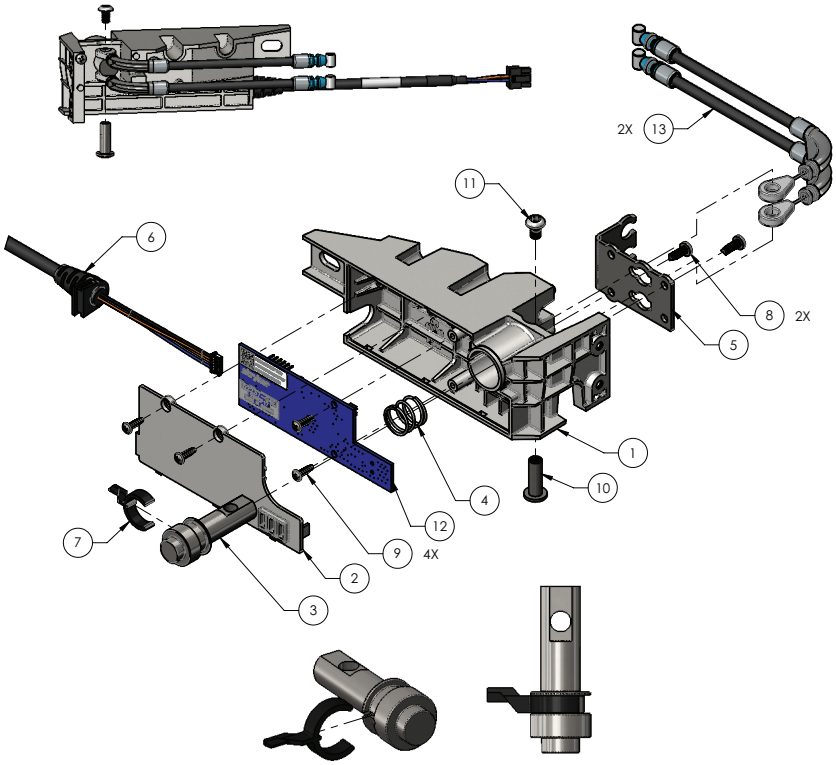

Figure 23 – DPM board replacement, foot

15. Unplug all cables from the DPM board. Make note of the cable labels and plugs.
16. Remove and discard the DPM board.
17. Reverse steps to reinstall.
18. Calibrate the deck widths, see *Calibrate deck widths* (page 24).
19. Verify proper operation before you return the product to service.

Audio visual board (AVB) replacement

Tools required:

- #2 Phillips screwdriver
- ESD system

Procedure:

1. Unplug the power cord from the wall outlet.
2. On the footboard control panel, press **Enter** to access the **Settings** menu.
3. Highlight **Shutdown** and press **Enter**.
4. Push down on the brake pedal to apply the brake.
5. Using a #2 Phillips screwdriver, remove and save the three screws that secure the AVB assembly to the foot end of the litter frame.
6. Remove the AVB assembly from the litter frame.

CAUTION

- Always use ESD protective equipment before you open antistatic bags and service electronic parts.
- Do not place unprotected circuit boards on the floor.

7. Disconnect all cables from the AVB assembly. Make note of the cable labels and plugs.
8. Using a #2 Phillips screwdriver, remove and save the screw (4) and nut (5) that secure the speaker (2) to the AVB assembly. Remove and save the speaker (Figure 24).
9. Discard the AVB assembly.

10. Reverse steps to reinstall.
11. Verify proper operation before you return the product to service.

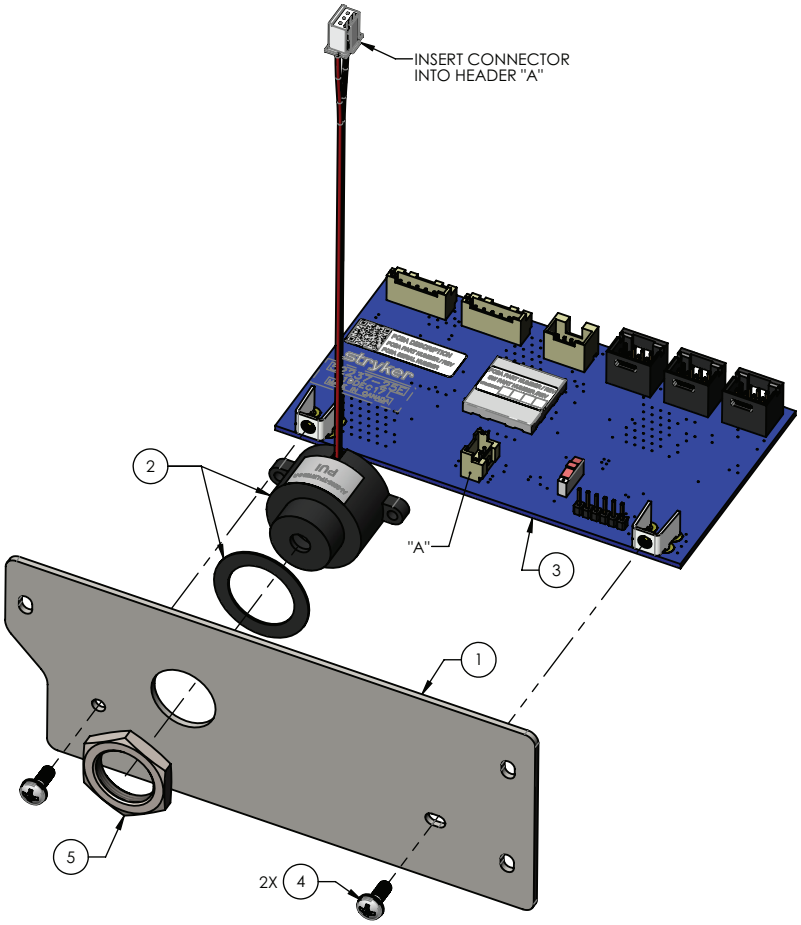

Figure 24 – AVB replacement

Patient station interface (PSI) board replacement

Tools required:

- #2 Phillips screwdriver

Procedure:

1. Unplug the power cord from the wall outlet.
2. On the footboard control panel, press **Enter** to access the **Settings** menu.
3. Highlight **Shutdown** and press **Enter**.
4. Push down on the brake pedal to apply the brake.
5. Unplug the nurse call cable, if equipped.
6. Using a #2 Phillips screwdriver, remove and save the three screws (26) that secure the PSI board assembly (25) to the litter frame and pull the PSI assembly outward (Figure 25).

CAUTION

- Always use ESD protective equipment before you open antistatic bags and service electronic parts.
- Do not place unprotected circuit boards on the floor.

7. Unplug all cables from the main control board. Make note of the cable labels and plugs.

8. Discard the PSI board.
9. Reverse steps to reinstall.
10. Verify proper operation before you return the product to service.

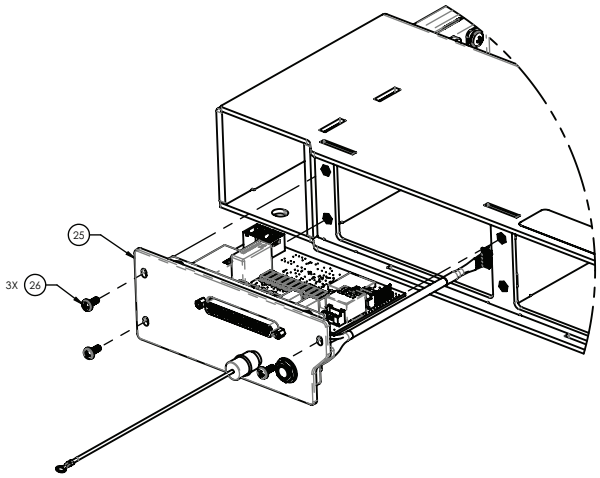

Figure 25 – PSI replacement

Footboard keypad/display replacement

Tools required:

- #2 Phillips screwdriver
- Pick
- ESD system

Procedure:

1. Unplug the power cord from the wall outlet.
2. On the footboard control panel, press **Enter** to access the **Settings** menu.
3. Highlight **Shutdown** and press **Enter**.
4. Push down on the brake pedal to apply the brake.
5. Using a pick, remove the front label (11) from the footboard (Figure 26).
6. Using a #2 Phillips screwdriver, remove and save the three screws (18) and washers (25) that secure the back panel (3) to the footboard (Figure 26).
7. Remove and save the back panel (3).
8. Using a #2 Phillips screwdriver, remove and save the six screws (18) and six washers (25) that secure the keypad/display (7) to the footboard (Figure 26).

CAUTION

- Always use ESD protective equipment before you open antistatic bags and service electronic parts.
- Do not place unprotected circuit boards on the floor.

9. Disconnect the keypad/display cable and the iBed footboard light cable (13). Remove and discard the keypad/display (7) (Figure 26).
10. Reverse steps to reinstall.
11. Verify proper operation before you return the product to service.

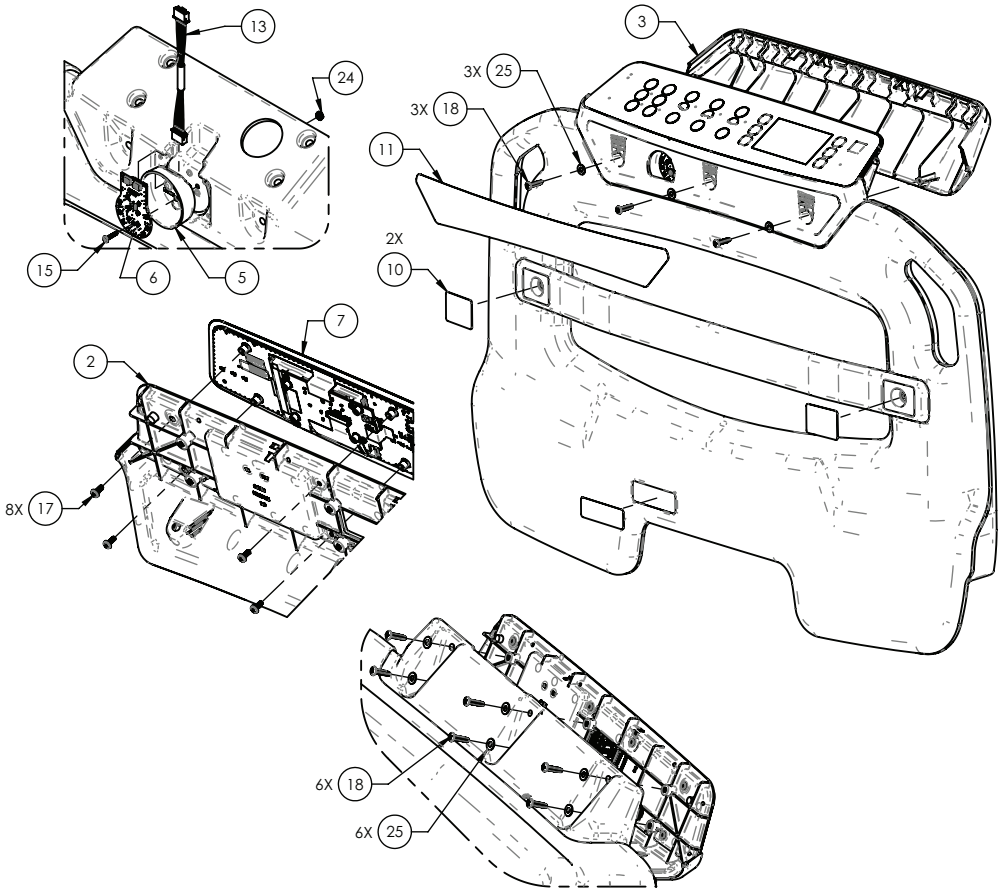

Figure 26 – Footboard keypad/display replacement

Footboard main cable replacement

Tools required:

- #2 Phillips screwdriver
- Pick
- ESD system

Procedure:

1. Unplug the power cord from the wall outlet.
2. On the footboard control panel, press **Enter** to access the **Settings** menu.
3. Highlight **Shutdown** and press **Enter**.
4. Push down on the brake pedal to apply the brake.
5. Using a pick, remove the front label (11) from the footboard (Figure 27).
6. Using a #2 Phillips screwdriver, remove the three screws (18) and washers (25) that secure the back panel (3) to the footboard (Figure 27). Remove and save the back panel.
7. Using a #2 Phillips screwdriver, remove and save the six screws (18) and six washers (25) that secure the keypad/display (7) to the footboard (Figure 27).

CAUTION

- Always use ESD protective equipment before you open antistatic bags and service electronic parts.
- Do not place unprotected circuit boards on the floor.

8. Disconnect the keypad/display cable and the iBed footboard light cable (13). Remove and save the keypad/display (7) (Figure 27).
9. Remove the footboard from the product.
10. Using a #2 Phillips screwdriver, remove and save the two screws (19) that secure the footboard main cable (14) to the bottom of the footboard (Figure 27).

11. Remove the footboard main cable (14) from the footboard and discard (Figure 27).
12. Reverse steps to reinstall.
13. Verify proper operation before you return the product to service.

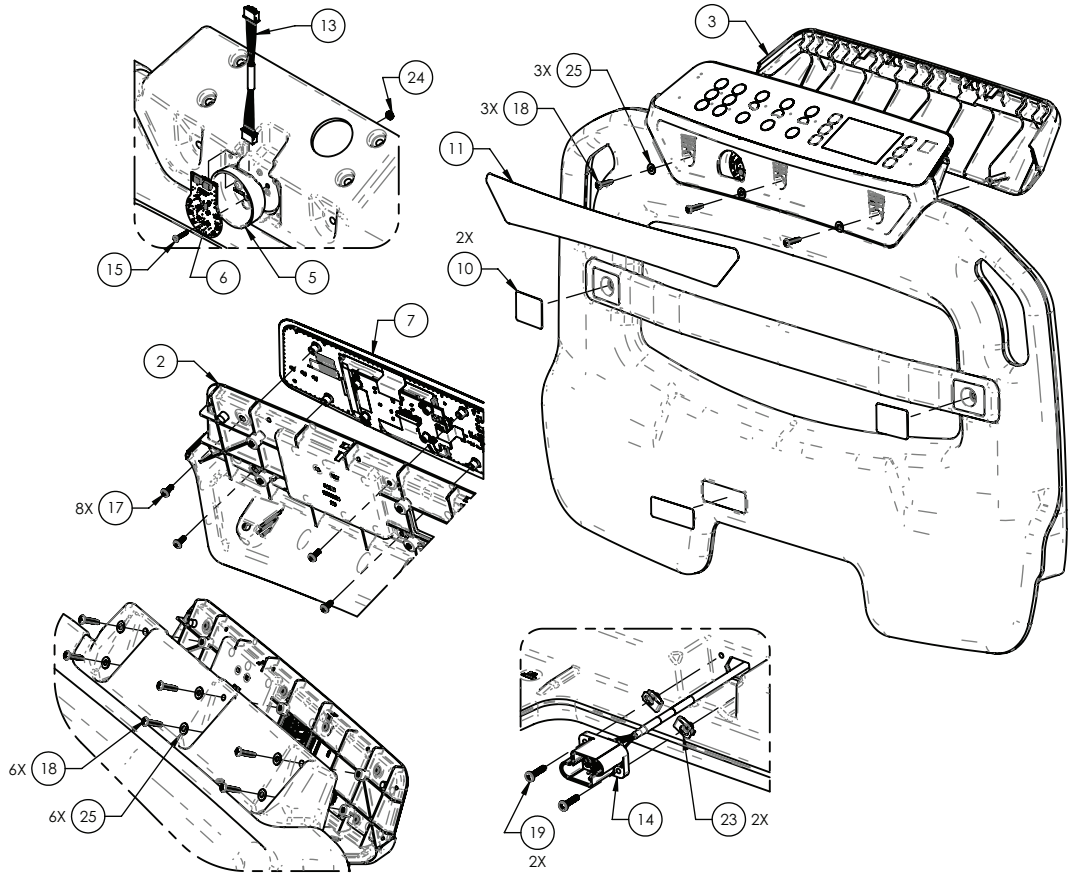

Figure 27 – Footboard main cable replacement

Fowler actuator replacement

Tools required:

- Needle nose pliers
- Small flat screwdriver
- Syn-Tech grease (3000-200-719)

Procedure:

1. Raise the product to the highest height position.
2. Unplug the power cord from the wall outlet.
3. On the footboard control panel, press **Enter** to access the **Settings** menu.
4. Highlight **Shutdown** and press **Enter**.
5. Push down on the brake pedal to apply the brake.
6. Raise both head end siderails to the up and locked position.
7. Pull the CPR release handle to lower the Fowler down.
8. Using needle nose pliers, remove both rue ring retaining clips (9) from the clevis pins (18, 19) that attach the actuator (20) to the litter weldment and Fowler weldment (Figure 28).
9. While supporting the actuator (20) with one hand, remove the head end clevis pin (18) and then lower the actuator down (Figure 28).

   Note - Apply a thin coat of Syn-Tech grease to the clevis pin when you reinstall.
10. Using a small flat screwdriver, unlock the gray CPR pull retainer from the red CPR pull to loosen the CPR pull retainer.

11. Using a small flat screwdriver, remove the gray CPR pull retainer from the red CPR pull. A white spacer between the CPR pull and the CPR cable retaining bracket will fall out (Figure 29). Save the white spacer.
12. Remove the CPR cables from the CPR cable retaining bracket.
13. Using a small flat screwdriver, release the retaining ring from the power and sensor cable quick connects and disconnect the cables from the actuator. When reconnecting the cables, fully seat and lock the cable quick connector retaining ring.
14. While supporting the actuator (20) with one hand, remove the foot end clevis pin (19) and then lower the actuator down (Figure 28).

    Note - Apply a thin coat of Syn-Tech grease to the clevis pin when you reinstall.
15. Reverse steps to reinstall.
16. Calibrate angles, see *Calibrate angles* (page 23).
17. Verify proper operation before you return the product to service.

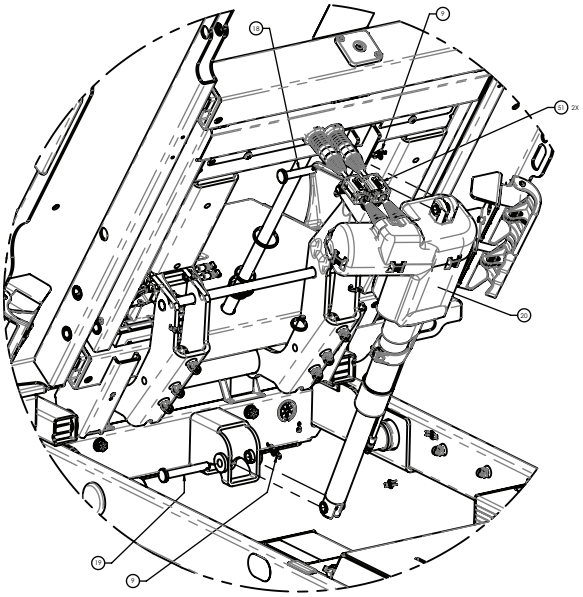

Figure 28 – Fowler actuator replacement

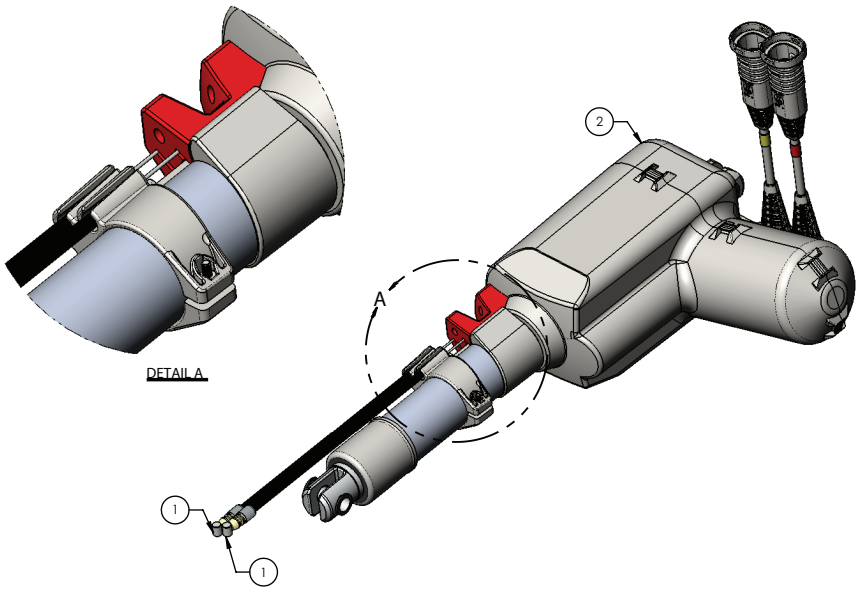

Figure 29 – Fowler CPR pull

Gatch actuator replacement

Tools required:

- Needle nose pliers
- Small flat screwdriver
- Syn-Tech grease (3000-200-719)

Procedure:

1. Raise the product to the highest height position.
2. Unplug the power cord from the wall outlet.
3. On the footboard control panel, press **Enter** to access the **Settings** menu.
4. Highlight **Shutdown** and press **Enter**.
5. Push down on the brake pedal to apply the brake.
6. Raise both foot end siderails to the up and locked position.
7. Using a small flat screwdriver, release the power/sensor cable quick connect (51) and disconnect the cable from the actuator (46) (Figure 30). When re-connecting the cables, fully seat and lock the cable quick connector retaining ring.
8. Using needle nose pliers, remove both rue ring retaining clips (9) from the clevis pins (21) that attach the actuator (46) to the litter weldment and Fowler weldment (Figure 30).
9. While supporting the actuator (46) with one hand, remove the head end clevis pin (21) and foot end clevis pin (21) and then lower the actuator down (Figure 30).

   Note - Apply a thin coat of Syn-Tech grease to the clevis pin when you reinstall.
10. Reverse steps to reinstall.
11. Calibrate angles, see *Calibrate angles* (page 23).
12. Verify proper operation before you return the product to service.

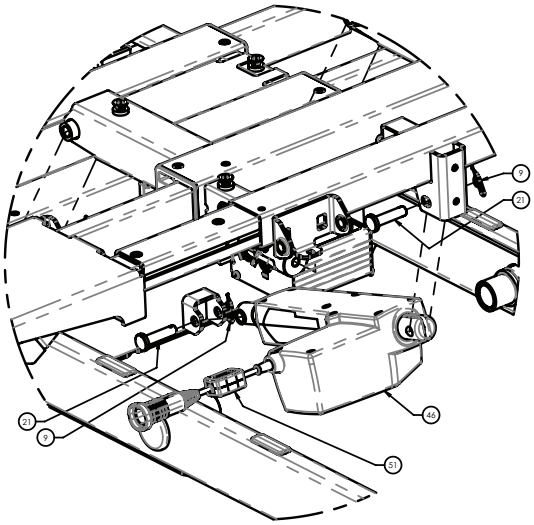

Figure 30 – Gatch actuator replacement

Foot actuator replacement

Tools required:

- Needle nose pliers
- Small flat screwdriver
- Syn-Tech grease (3000-200-719)

Procedure:

1. Raise the product to the highest height position.
2. Unplug the power cord from the wall outlet.
3. On the footboard control panel, press **Enter** to access the **Settings** menu.
4. Highlight **Shutdown** and press **Enter**.
5. Push down on the brake pedal to apply the brake.
6. Raise both foot end siderails to the up and locked position.
7. Using needle nose pliers, remove the rue ring retaining clip (9) from the head end clevis pin (21) that attaches the actuator (35) to the litter weldment (Figure 31).
8. Using needle nose pliers, remove the circle ring retaining ring (36) from the foot end clevis pin (18) that attaches the actuator (35) to the thigh weldment (Figure 31).

9. While supporting the actuator (35) with one hand, remove the head end clevis pin (21) and the foot end clevis pin (18) and then lower the actuator down (Figure 31).

   Note - Apply a thin coat of Syn-Tech grease to the clevis pin when you reinstall.

10. Using a small flat screwdriver, release the power/sensor cable quick connect (51) and disconnect the cable from the actuator (35) (Figure 31). When re-connecting the cables, fully seat and lock the cable quick connector retaining ring.

11. Reverse steps to reinstall.

    Note - Route the power/sensor cable over the top of the actuator when you reinstall the actuator.

12. Calibrate angles, see *Calibrate angles* (page 23).

13. Verify proper operation before you return the product to service.

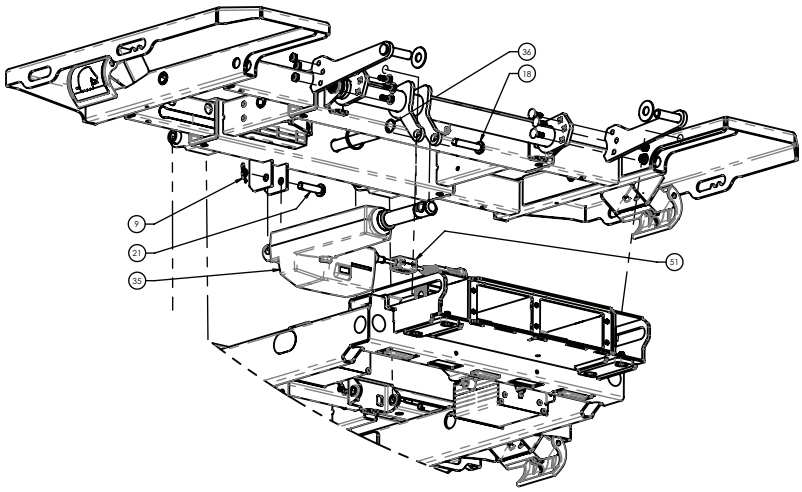

Figure 31 – Foot actuator replacement

Lift actuator, head and foot replacement

Tools required:

- Needle nose pliers
- (2) 3/8” x 1” grade 8 bolt and nut
- Syn-Tech grease (3000-200-719)

Procedure:

1. Run the actuator up or down to remove the litter load from the actuator.
2. Raise both siderails to the up and locked position at either the head end or foot end.
3. If the activator still runs:

   a. Raise the product to the highest height position to expose the base weldment lift support holes on both sides.

   b. Insert two 3/8” bolts through the support holes in the base weldment from the inside out and then thread the nuts onto the bolts to keep the bolts from falling out.

   CAUTION - Always leave the bolts loose in the support holes, so the bolt head is out far enough to stop the lift mechanism slide block.

   c. Lower the litter until the lift mechanism slides touch the 3/8” bolt heads. You should be able to jostle the actuator by hand after you remove the litter load from the litter surface. If not, lower the litter more until the actuator is loose.

   WARNING - Do not lower the litter too low or you may cause damage to the support bolts.

4. If the actuator does not run:

   a. Put the bed into the Maintenance mode (limits bypassed) and then go to the Actuator Maintenance Menu. Select the actuator that needs to move and see if it will run.

   b. See step 3a.

5. If the actuator will not run with the limits bypassed in step 4a, use a hoist, with a strap around and under the litter, to remove the litter load from the actuator and support the litter surface on the end that has failed.
6. Unplug the power cord from the wall outlet.

7. On the footboard control panel, press **Enter** to access the **Settings** menu.
8. Highlight **Shutdown** and press **Enter**.
9. Using the cable quick connector release, unlock the cable from the motor control box so that it is loose.
10. Using needle nose pliers, remove both rue ring retaining clips (23) from the clevis pins (22) that attach the actuator (24) to the litter weldment and lift weldment (Figure 32).
11. While supporting the actuator (24) with one hand, remove the head end clevis pin (22) and foot end clevis pin (22) and then lower the actuator down (Figure 32).

    Note - Apply a thin coat of Syn-Tech grease to the clevis pin when you reinstall.
12. Reverse steps to reinstall.
13. Calibrate angles, see *Calibrate angles* (page 23).
14. Verify proper operation before you return the product to service.

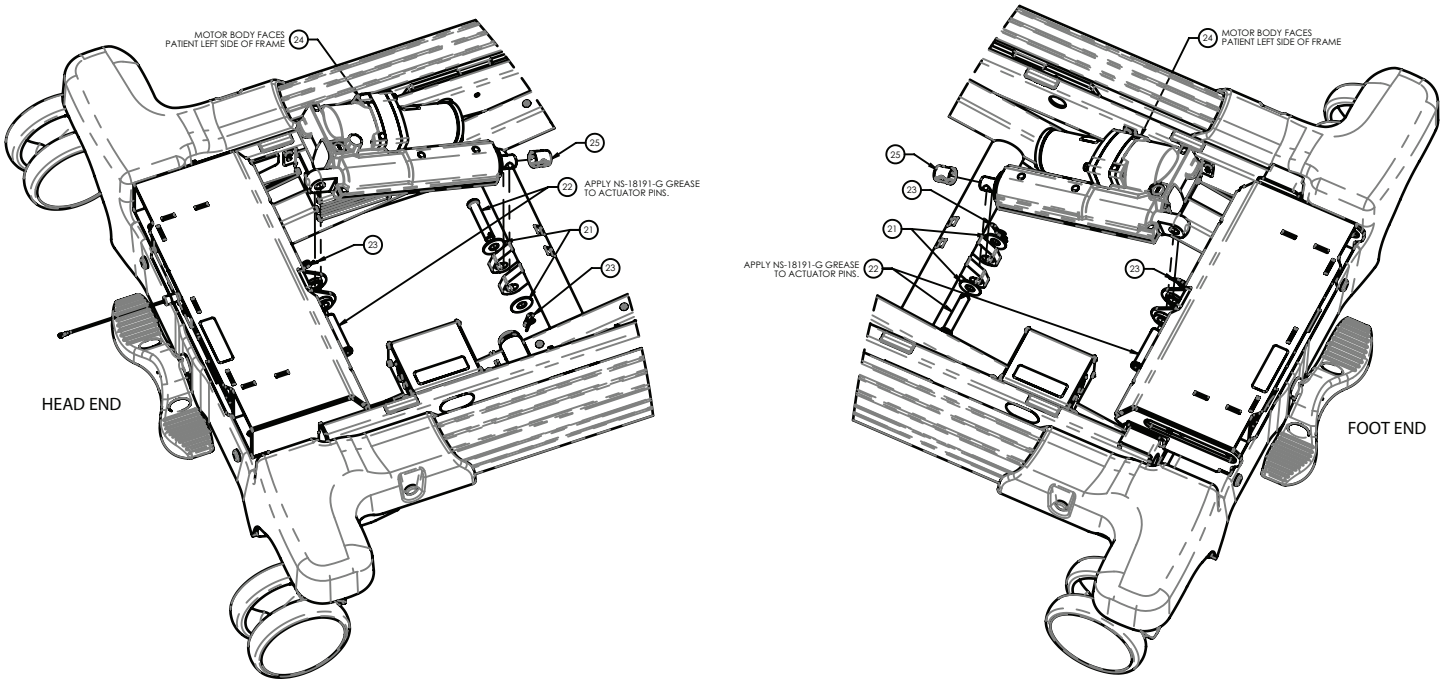

Figure 32 – Lift actuator replacement

Potentiometer - lift, head left or foot right replacement

Tools required:

- #2 Phillips screwdriver
- #2 Phillips stubby screwdriver
- Pick

Procedure:

1. Raise the Fowler to the highest height for head left, or raise the knee Gatch to the highest height for foot right.
2. Unplug the power cord from the wall outlet.
3. On the footboard control panel, press **Enter** to access the **Settings** menu.
4. Highlight **Shutdown** and press **Enter**.
5. Push down on the brake pedal to apply the brake.
6. Raise the head end siderails to the full up and locked position (for head left) or raise the foot end siderails to the full up and locked position (for foot right).
7. Use a pick to remove the round label (16) on top of the lift arm cap (Figure 33).
8. Using a #2 Phillips stubby screwdriver, remove and save the screw (19) that secures the cap to the lift arm (Figure 33).
9. Using a #2 Phillips screwdriver, remove and save the screw (19) that secures the p-clamp (18) and potentiometer cable to the lift arm (Figure 33).
10. Using a #2 Phillips screwdriver, remove and save the two screws (12) that secure the potentiometer (11) to the lift arm (Figure 33).

11. Pull the cable out of the lift arm tube and unplug and remove the potentiometer (11).
12. Remove and save the potentiometer gear (13) from the potentiometer (11) and discard the potentiometer (Figure 33).
13. Reverse steps to reinstall.
14. Calibrate angles, see *Calibrate angles* (page 23).
15. Verify proper operation before you return the product to service.

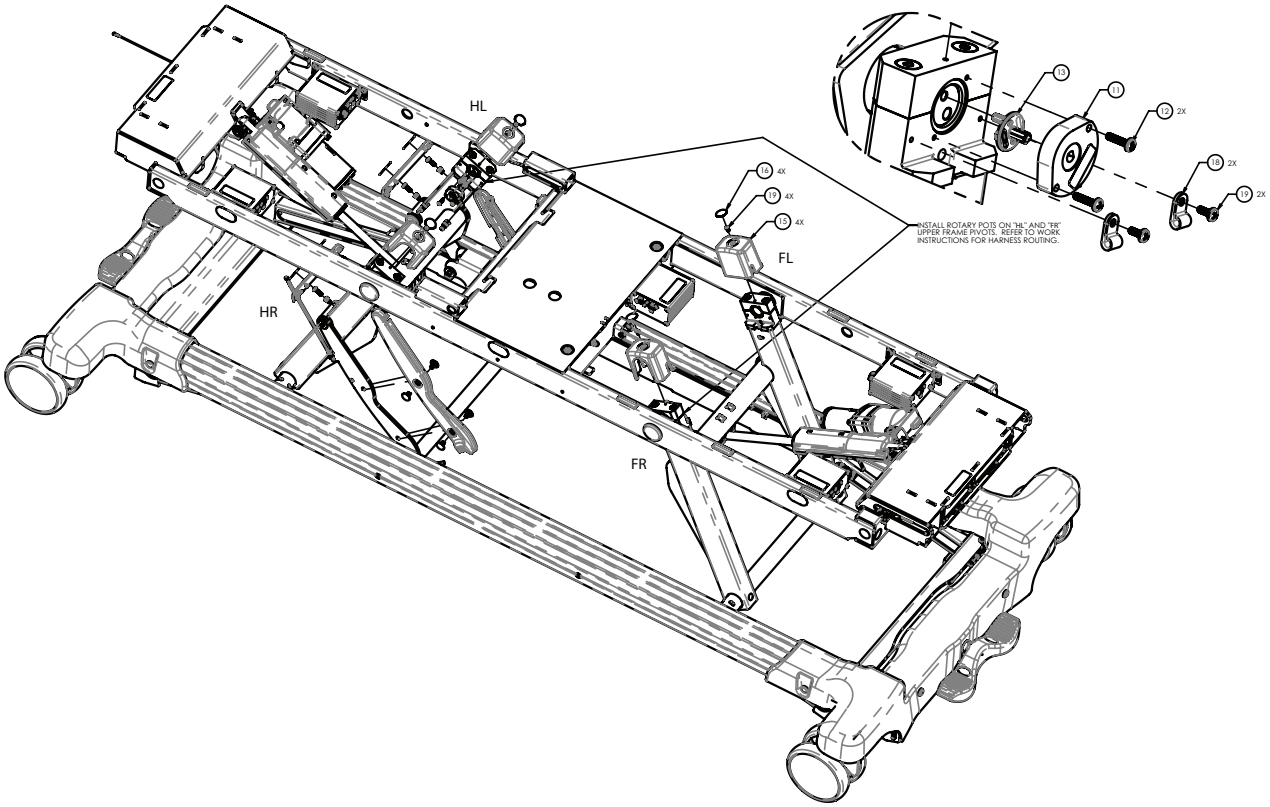

Figure 33 – Potentiometer replacement

Scale board, head end and foot end replacement

Note - When NAWI is enabled, the scale system must go through verification of conformity. This must be done by Stryker or another certified body before you return the product to service.

Tools required:

- #2 Phillips screwdriver
- Small flat head screwdriver
- ESD system

Procedure:

1. Push down on the brake pedal to apply the brake.
2. Unplug the power cord from the wall outlet.
3. On the footboard control panel, press **Enter** to access the **Settings** menu.
4. Highlight **Shutdown** and press **Enter**.
5. Using a small flat head screwdriver, remove and save the four caster cover screw caps (6) (Figure 34).

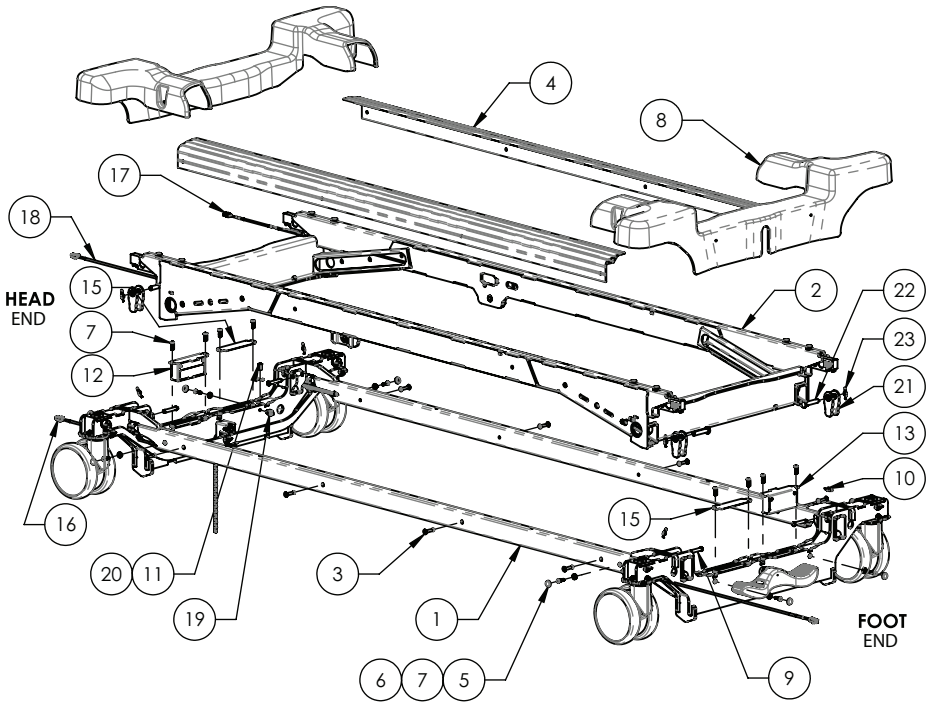

Figure 34 – Scale board replacement

6. Using a #2 Phillips screwdriver, remove and save the four screws (7) and washers (5) that secure the caster cover (8) to the base frame (Figure 34). Remove and save the caster cover.
7. Using a #2 Phillips screwdriver, remove and save the two screws (7) that secure the scale board assembly (12 (head end), 13 (foot end)) to the base weldment (Figure 35). Remove the scale board assembly.

CAUTION

- Always use ESD protective equipment before you open antistatic bags and service electronic parts.
- Do not place unprotected circuit boards on the floor.

8. Disconnect the communication cable and the two load cells from the scale board assembly (12 (head end), 13 (foot end)) (Figure 35). Discard the scale board assembly.
9. Reverse steps to reinstall.
10. Calibrate the scale system, see *Calibrate scale* (page 22).
11. Verify proper operation before you return the product to service.

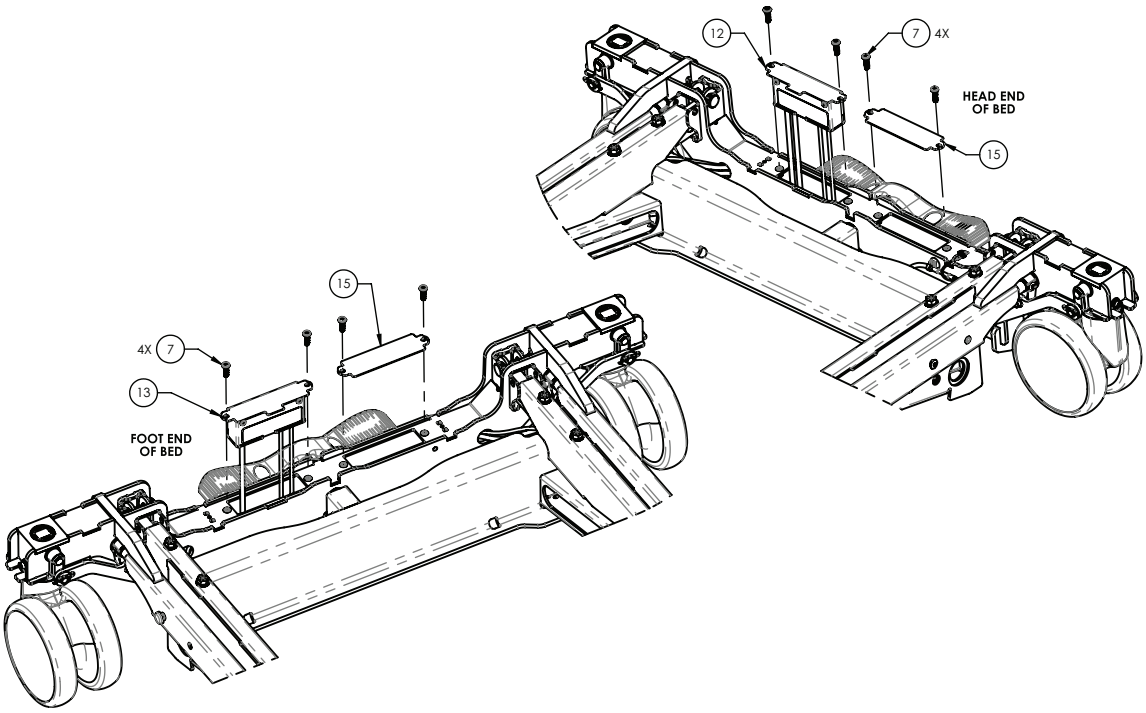

Figure 35 – Scale board replacement

Load cell assembly replacement

Note - When NAWI is enabled, the scale system must go through verification of conformity. This must be done by Stryker or another certified body before returning the product to service.

Tools required:

- #2 Phillips screwdriver
- Small flat head screwdriver
- Torque wrench (in-lb)
- Needle nose pliers
- Ratchet
- 1/2” socket
- Small floor jack
- **Loctite®** 242

Procedure:

1. Push down the brake pedal to apply the brake.
2. Unplug the power cord from the wall outlet.
3. On the footboard control panel, press **Enter** to access the **Settings** menu.
4. Highlight **Shutdown** and press **Enter**.
5. Using a small flat head screwdriver, remove and save the four caster cover screw caps (6) (Figure 36).

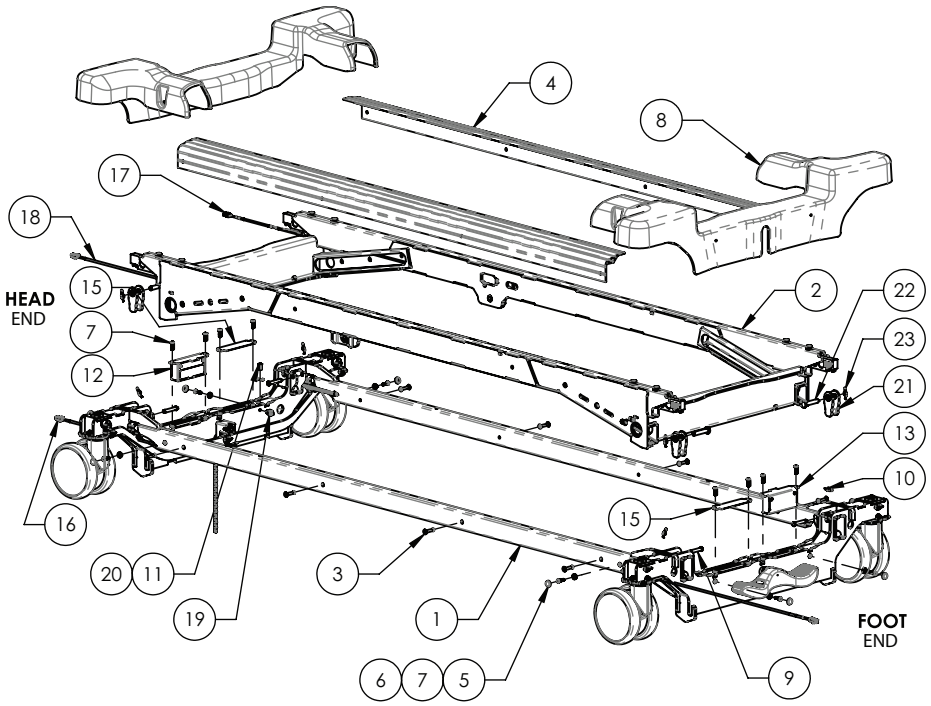

Figure 36 – Load cell assembly replacement

6. Using a #2 Phillips screwdriver, remove and save the four screws (7) and washers (5) that secure the caster cover (8) to the base frame weldment (Figure 36). Remove and save the caster cover.
7. Using a small floor jack, near the load cell (3) that you need to replace, raise the lift support tube upward until the weight is removed from the load cell (3) (Figure 37).
8. Using needle nose pliers. remove and save the rue clip (23) and pin (22) from the top of the load cell linkage (21) (Figure 36).
9. Using a ratchet and 1/2” socket, remove and save the two bolts (2) that secure the load cell assembly (3) to the base frame weldment (Figure 37).

   Note
   - When you reinstall the load cell assembly (3), orient the load cell assembly up, so you can secure the bolts by hand to start.
   - When you reinstall, use **Loctite** 242 on each bolt (2) and torque to 150-180 in-lb.

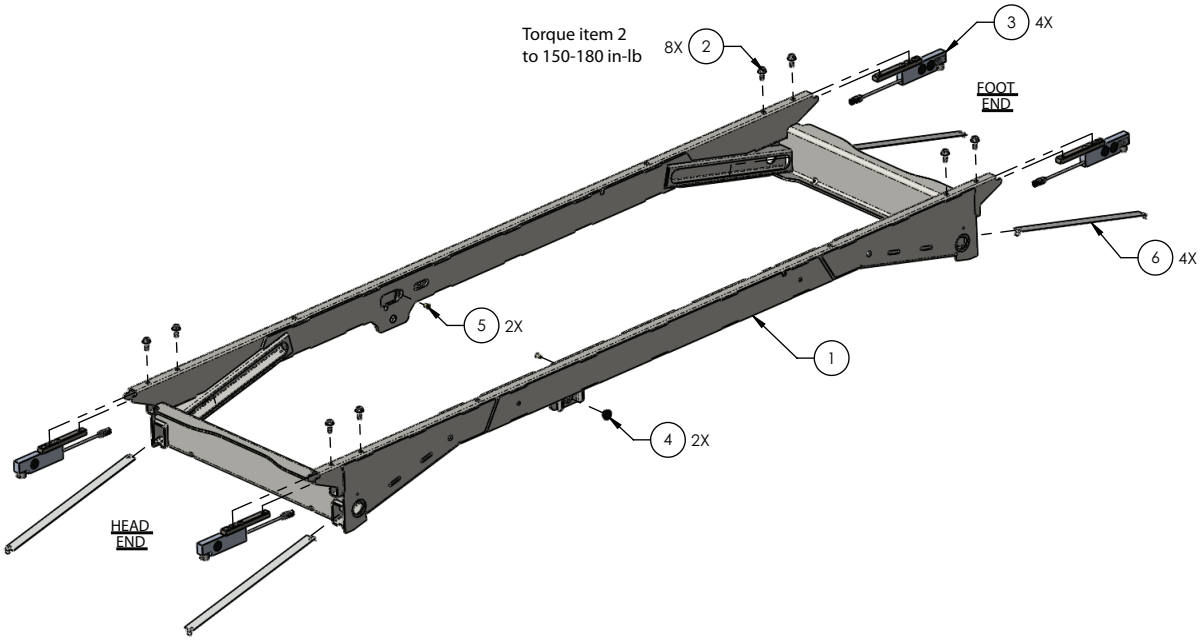

Figure 37 – Load cell assembly replacement

10. Using needle nose pliers, remove the load cell assembly (3) from the base frame weldment (Figure 37).
11. Using a #2 Phillips screwdriver, remove and save the two screws (7) that secure the inspection cover (15) to the base frame weldment (Figure 36). Remove and save the inspection cover.
12. Using a #2 Phillips screwdriver, remove and save the two screws (7) that secure the scale board assembly (12 (head end), 13 (foot end)) to the base frame weldment (Figure 36). Remove and save the scale board assembly.
13. Disconnect the load cell assembly and remove the cable from the base frame weldment. Discard the load cell assembly.

    Note - Note the routing of the load cell cable for reinstallation.
14. Reverse steps to reinstall.
15. Calibrate the scale system, see *Calibrate scale* (page 22).
16. Verify proper operation before you return the product to service.

Siderail, head end replacement

Tools required:

- T15 Torx driver
- T27 Torx driver
- Needle nose pliers
- Syn-Tech grease (3000-200-719)

Procedure:

1. Raise the product to the highest height position.
2. Raise the Fowler to the full upright position.
3. Unplug the power cord from the wall outlet.
4. On the footboard control panel, press **Enter** to access the **Settings** menu.
5. Highlight **Shutdown** and press **Enter**.
6. Push down on the brake pedal to apply the brake.
7. Expand all litter decks to the 48 in. position.
8. Raise the siderail to the up and locked position.
9. Using a T15 Torx driver, remove the two screws (22) that secure the junction board assembly (51) to the siderail carrier (1) (Figure 38). Remove the junction board assembly.

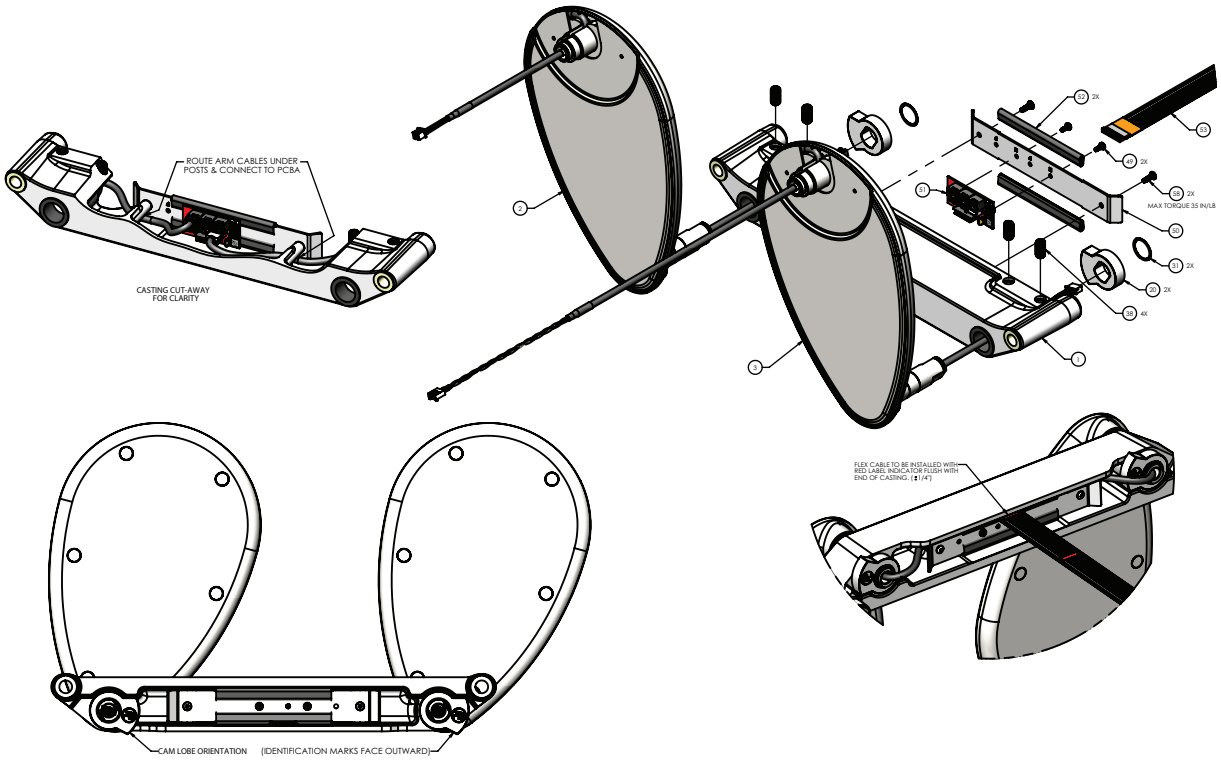

Figure 38 – Siderail replacement, head end

10. Unplug the two siderail cables from the junction board assembly (51).
11. Using a T27 Torx driver, remove the screw (30) and washer (29) that secures the guide rod to the litter (Figure 39).
12. Push the siderail release button to lower the siderail to the lowest stowed position.
13. Using needle nose pliers, from under the litter surface, slide each glide rod out.

    Note - Save the two rubber washers (27) on each glide rod, one on both sides of the siderail carrier, to reinstall. Use Syn-Tech grease to lube the glide rod, if required.
14. While supporting the rail with one hand, remove both glide rods and remove the siderail assembly.
15. Reverse steps to reinstall.
16. Verify proper operation before you return the product to service.

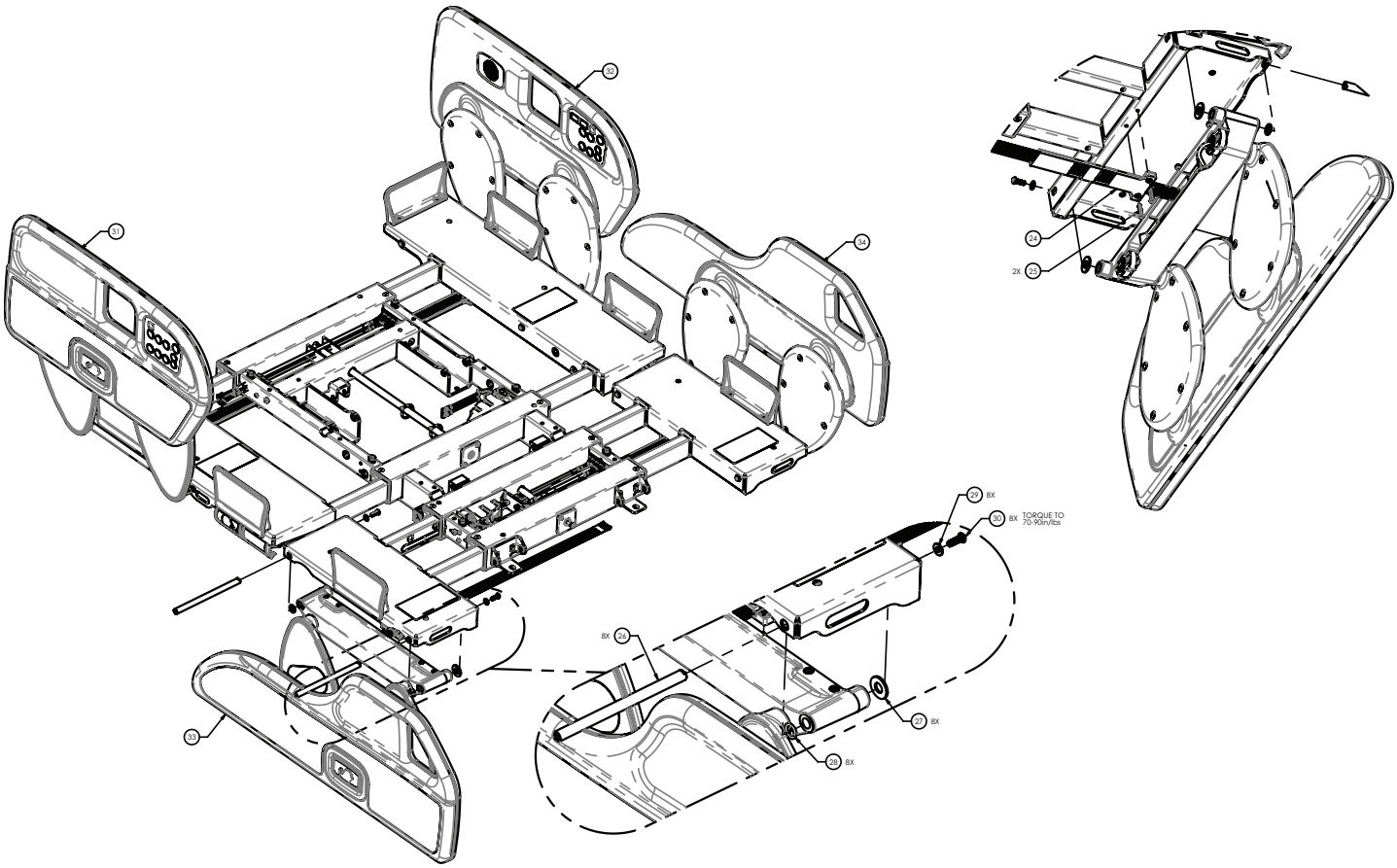

Figure 39 – Siderail replacement, head end

Head siderail outer membrane replacement

Tools required:

- #2 Phillips screwdriver
- Pick

Procedure:

1. Raise the product to the highest height position.
2. Unplug the power cord from the wall outlet.
3. On the footboard control panel, press **Enter** to access the **Settings** menu.
4. Highlight **Shutdown** and press **Enter**.
5. Push down on the brake pedal to apply the brake.
6. Using a pick, remove the outer membrane (46) from the siderail hoop (13) (Figure 40).
7. Using a #2 Phillips screwdriver, remove and save the two screws (41) that secure the membrane support plate (47) to the siderail assembly (Figure 40).
8. Disconnect the outer membrane (46) from the inner membrane control board and discard (Figure 40).
9. Reverse steps to reinstall.
10. Verify proper operation before you return the product to service.

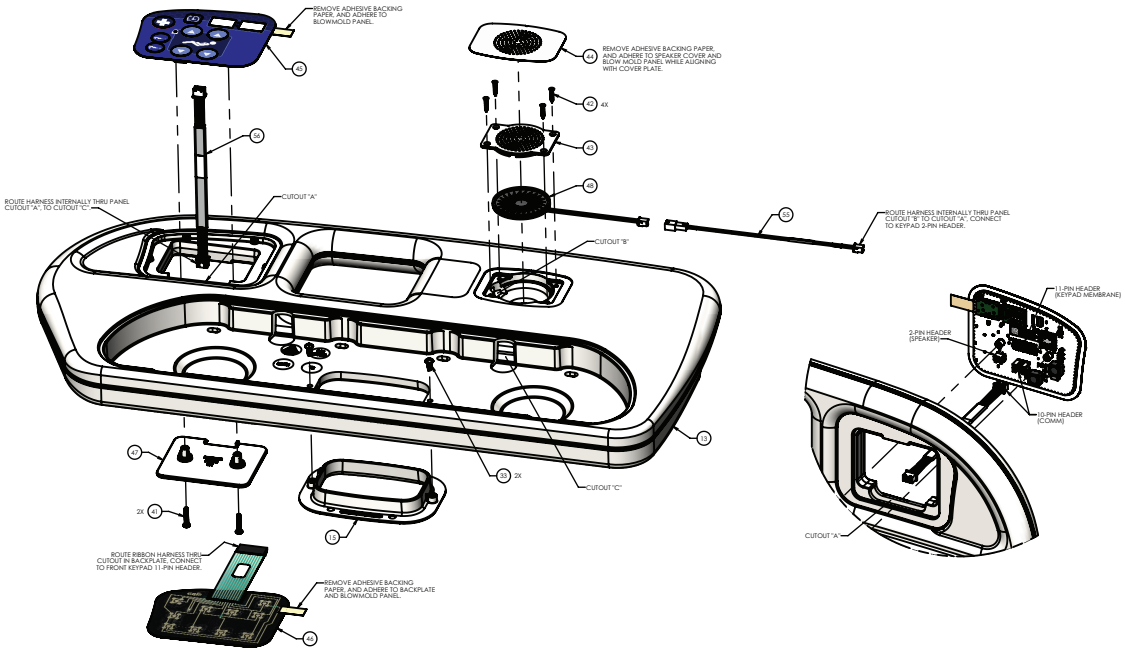

Figure 40 – Head siderail membrane replacement, patient right

Head siderail inner membrane replacement

Tools required:

- #2 Phillips screwdriver
- Pick
- ESD system

Procedure:

1. Raise the product to the highest height position.
2. Unplug the power cord from the wall outlet.
3. On the footboard control panel, press **Enter** to access the **Settings** menu.
4. Highlight **Shutdown** and press **Enter**.
5. Push down on the brake pedal to apply the brake.
6. Using a pick, remove the outer membrane (46) from the siderail hoop (13) (Figure 40).
7. Using a #2 Phillips screwdriver, remove and save the two screws (41) that secure the membrane support plate (47) to the siderail assembly (Figure 40).
8. Disconnect the outer membrane (46) from the inner membrane control board and discard (Figure 40).
9. Disconnect the two cables from the inner membrane control board.

CAUTION

- Always use ESD protective equipment before you open antistatic bags and service electronic parts.
- Do not place unprotected circuit boards on the floor.

---

10. Using a pick, remove the inner membrane (45) from the siderail hoop (13) and discard (Figure 40).
11. Reverse steps to reinstall.
12. Verify proper operation before you return the product to service.

Head siderail control board replacement

Tools required:

- #2 Phillips screwdriver
- 3/8” nut driver
- Pick
- ESD system

Procedure:

1. Raise the product to the highest height position.
2. Unplug the power cord from the wall outlet.
3. On the footboard control panel, press **Enter** to access the **Settings** menu.
4. Highlight **Shutdown** and press **Enter**.
5. Push down on the brake pedal to apply the brake.
6. Using a pick, remove and discard the outer siderail label (14) (Figure 41).

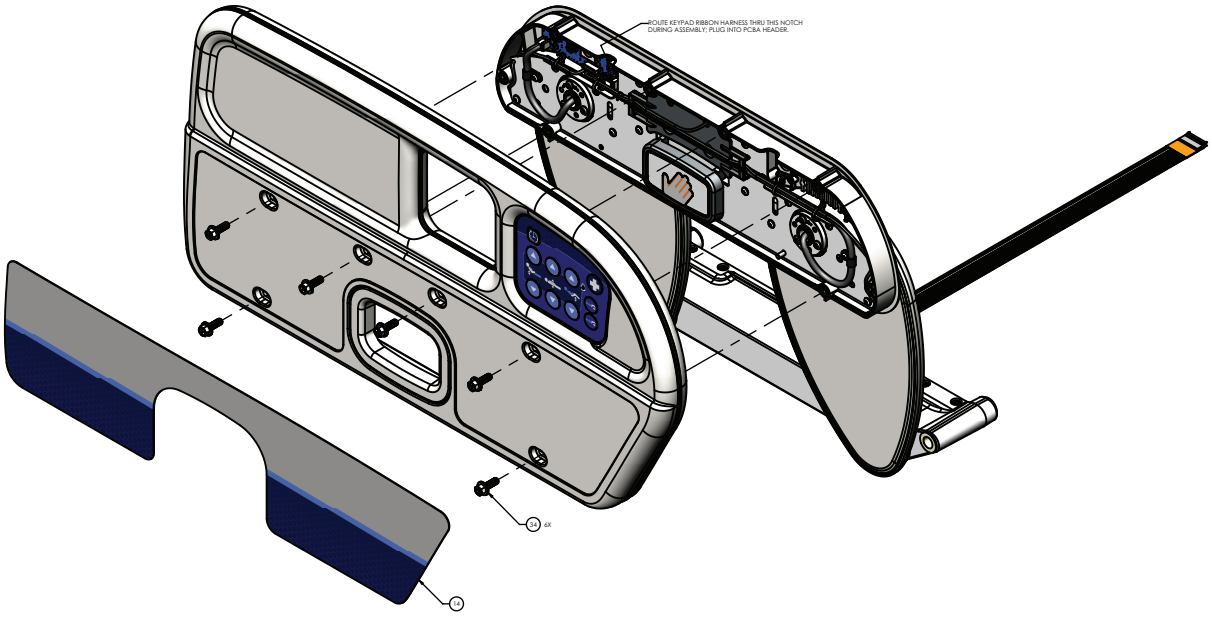

Figure 41 – Head siderail control board replacement

7. Using a 3/8” nut driver, remove and save the six bolts (34) that secure the siderail hoop (13) to the siderail assembly (Figure 41).
8. Loosen the siderail hoop (13) from the siderail assembly and disconnect the cable that connects the siderail hoop (13) to the siderail control board to remove and save the siderail hoop (13).
9. Disconnect the cables from the siderail control board.

CAUTION

- Always use ESD protective equipment before you open antistatic bags and service electronic parts.
- Do not place unprotected circuit boards on the floor.

10. Using a #2 Phillips screwdriver, remove and save the four screws (25) that secure the siderail control board (39) to the siderail assembly (Figure 42).
11. Remove and discard the siderail control board (39)
12. Reverse steps to reinstall.
13. Verify proper operation before you return the product to service.

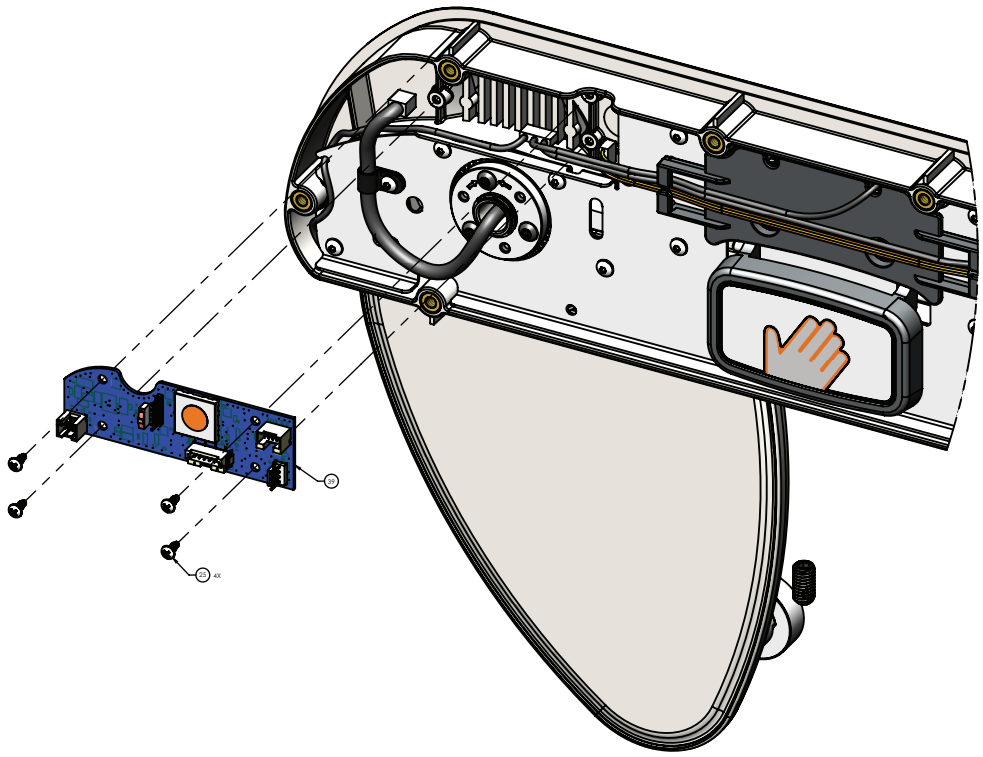

Figure 42 – Head siderail control board replacement, patient right

Head siderail hoop replacement

Tools required:

- #2 Phillips screwdriver
- 3/8” nut driver
- Pick

Procedure:

1. Raise the product to the highest height position.
2. Unplug the power cord from the wall outlet.
3. On the footboard control panel, press **Enter** to access the **Settings** menu.
4. Highlight **Shutdown** and press **Enter**.
5. Push down on the brake pedal to apply the brake.
6. Using a pick, remove and discard the outer siderail label (14) (Figure 40).
7. Using a pick, remove the outer membrane (46) from the siderail hoop (13) (Figure 40).
8. Using a #2 Phillips screwdriver, remove and save the two screws (41) that secure the membrane support plate (47) to the siderail assembly (Figure 40).
9. Disconnect the outer membrane (46) from the inner membrane control board and discard (Figure 40).
10. Disconnect the two cables from the inner membrane control board.
11. Using a pick, remove the inner membrane (45) from the siderail hoop (13) and discard (Figure 40).
12. Using a 3/8” nut driver, remove and save the six bolts (34) that secure the siderail hoop (13) to the siderail assembly (Figure 40).
13. Discard the siderail hoop (13).
14. Reverse steps to reinstall.
15. Verify proper operation before you return the product to service.

Siderail, foot end replacement

Tools required:

- T15 Torx driver
- T27 Torx driver
- Needle nose pliers
- Syn-Tech grease (3000-200-719)

Procedure:

1. Raise the product to the highest height position.
2. Unplug the power cord from the wall outlet.
3. On the footboard control panel, press **Enter** to access the **Settings** menu.
4. Highlight **Shutdown** and press **Enter**.
5. Push down on the brake pedal to apply the brake.
6. Expand all litter decks to the 48 in. position.
7. Raise the siderail to the up and locked position.
8. Using a T15 Torx driver, remove the two screws (22) that secure the junction board assembly (44) to the siderail carrier (1) (Figure 43). Remove the junction board assembly.
9. Unplug the two siderail cables from the junction board assembly (44).
10. Using a T27 Torx driver, remove the screw (30) and washer (29) that secures the guide rod to the litter (Figure 43).
11. Push the siderail release button to lower the siderail to the lowest stowed position.
12. Using needle nose pliers, from under the litter surface, slide each glide rod out.

    Note - Save the two rubber washers (27) on each glide rod, one on both sides of the siderail carrier, to reinstall. Use Syn-Tech grease to lube the glide rod, if required.
13. While supporting the rail with one hand, remove both glide rods and remove the siderail assembly.
14. Reverse steps to reinstall.
15. Verify proper operation before you return the product to service.

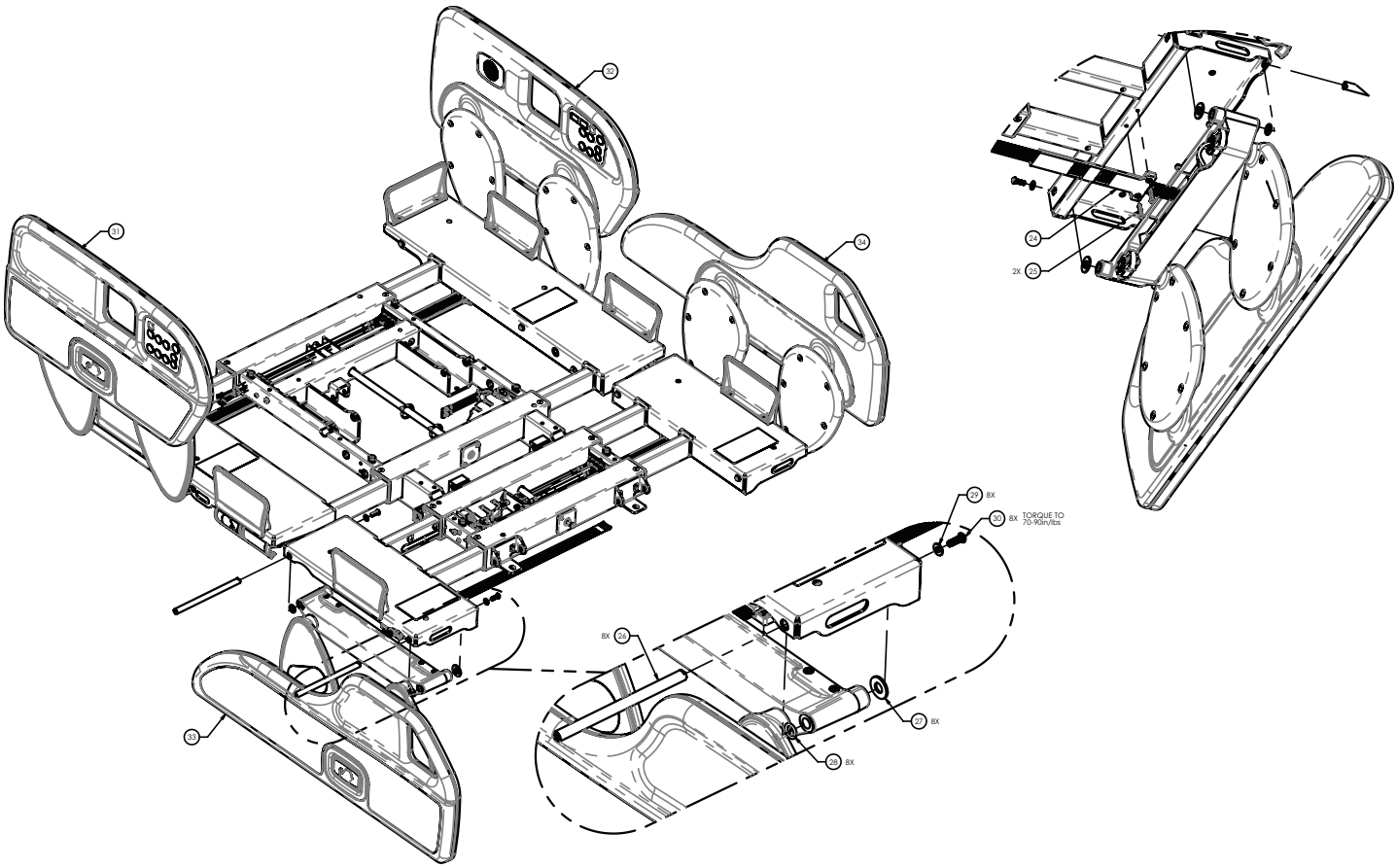

Figure 43 – Siderail replacement, foot end

Foot siderail control board replacement

Tools required:

- #2 Phillips screwdriver
- 3/8” nut driver
- Pick
- ESD system

Procedure:

1. Raise the product to the highest height position.
2. Unplug the power cord from the wall outlet.
3. On the footboard control panel, press **Enter** to access the **Settings** menu.
4. Highlight **Shutdown** and press **Enter**.
5. Push down on the brake pedal to apply the brake.
6. Using a pick, remove and discard the outer siderail label (14) (Figure 44).

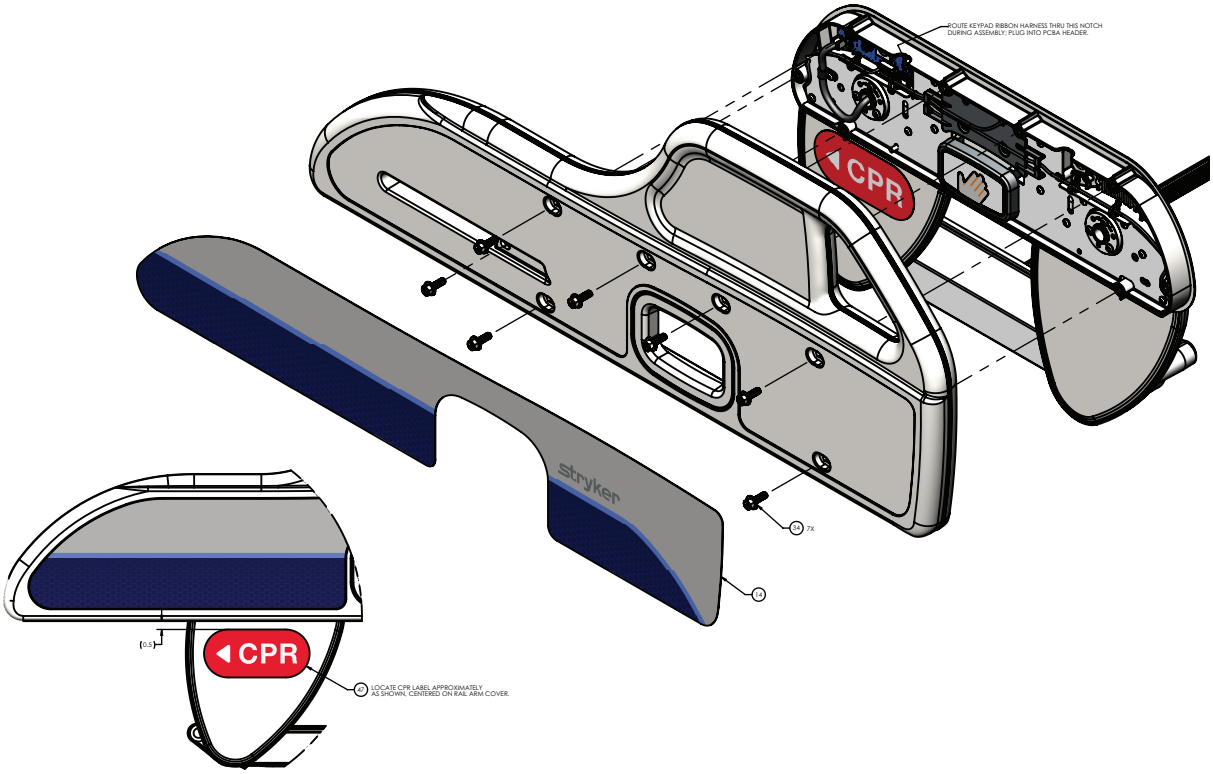

Figure 44 – Foot siderail control board replacement, patient right

7. Using a 3/8” nut driver, remove and save the seven bolts (34) that secure the siderail hoop to the siderail assembly (Figure 44).
8. Remove and save the siderail hoop.
9. Disconnect the cables from the siderail control board.

CAUTION

- Always use ESD protective equipment before you open antistatic bags and service electronic parts.
- Do not place unprotected circuit boards on the floor.

---

10. Using a #2 Phillips screwdriver, remove and save the four screws (25) that secure the siderail control board (39) to the siderail assembly (Figure 45).
11. Reverse steps to reinstall.
12. Verify proper operation before you return the product to service.

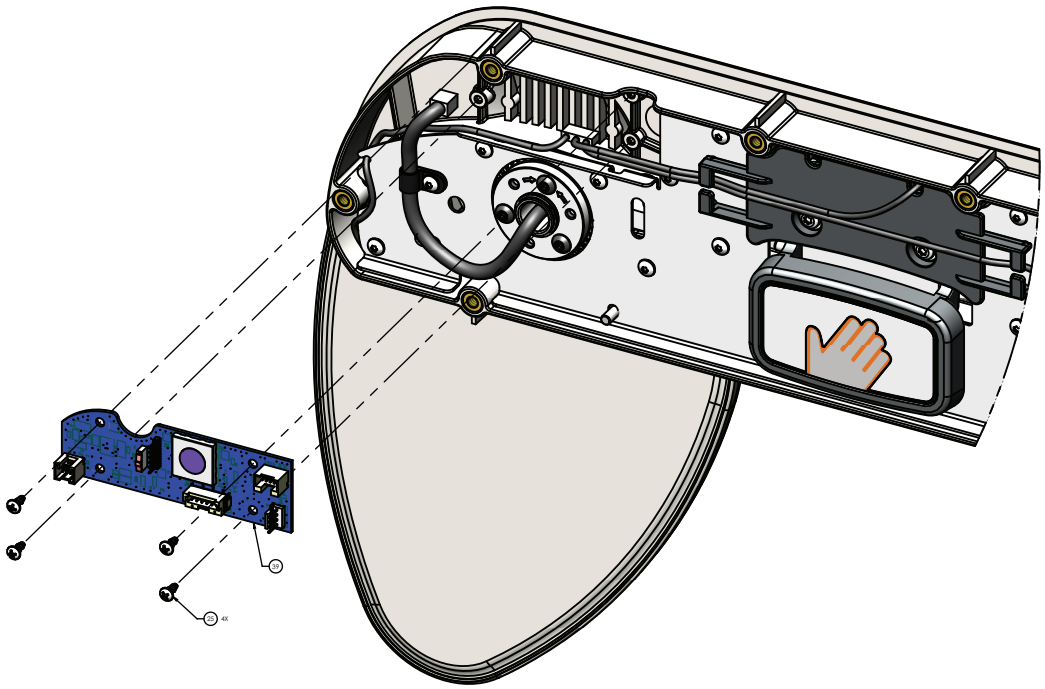

Figure 45 – Foot siderail control board replacement, patient right

Foot siderail hoop replacement

Tools required:

- 3/8” nut driver
- Pick

Procedure:

1. Raise the product to the highest height position.
2. Unplug the power cord from the wall outlet.
3. On the footboard control panel, press **Enter** to access the **Settings** menu.
4. Highlight **Shutdown** and press **Enter**.
5. Push down on the brake pedal to apply the brake.
6. Using a pick, remove and discard the outer siderail label (14) (Figure 44).
7. Using a 3/8” nut driver, remove and save the seven bolts (34) that secure the siderail hoop to the siderail assembly (Figure 44).
8. Reverse steps to reinstall.
9. Verify proper operation before you return the product to service.

IV pole attachment

Tools required:

- 3/8” ratchet
- 3/16” hex driver
- 1/2” socket

Procedure:

1. Using a 3/16” hex driver, remove and save the power cord retainer shoulder bolt and strap on both sides of the product.
2. Using a 1/2” socket, secure the bracket with the IV pole assembly to the left side of the product with the two supplied bolts and washers.
3. Using a 1/2” socket, secure the bracket with the rest block to the right side of the product with the two supplied bolts and washers.
4. Using a 3/16” hex driver, secure the power cord retainer shoulder bolt and strap on both sides of the product through both brackets.

5. Verify proper operation before you return the product to service.

Patient helper attachment

Tools required:

- 3/8” ratchet
- 3/8” hex driver
- 3/16” hex key

Procedure:

1. Using a 3/8” hex driver, attach the patient helper mounting bracket with the four supplied screws.

   Note - Make sure that the armrest pin faces upward.
2. On the floor, place the patient helper lifting pole, patient helper cap, and patient helper trapeze hanger together.
3. Using a 3/16” hex key, secure the patient helper lifting pole, patient helper cap, and trapeze hanger together with the supplied bolt.
4. With another person, lift and insert the patient helper assembly into the patient helper mounting bracket.
5. Verify proper operation before you return the product to service.

HILO frame assembly

5900200180 Rev B (Reference only)

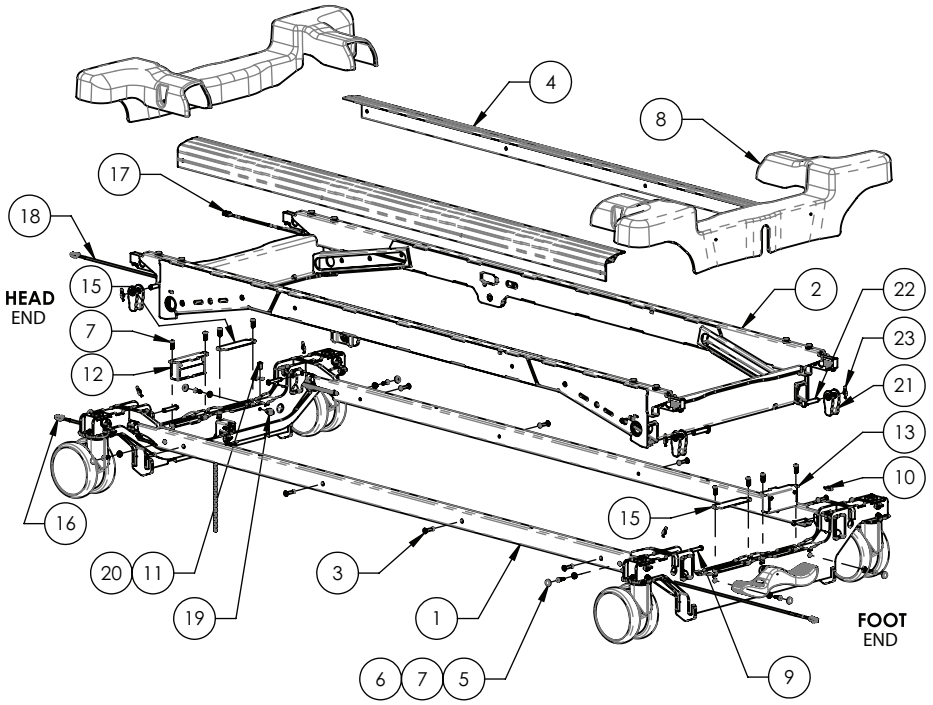

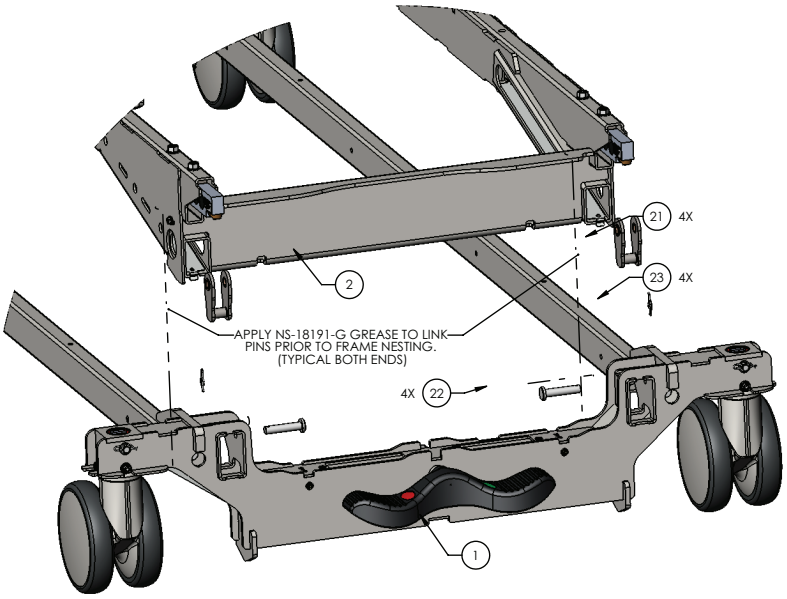

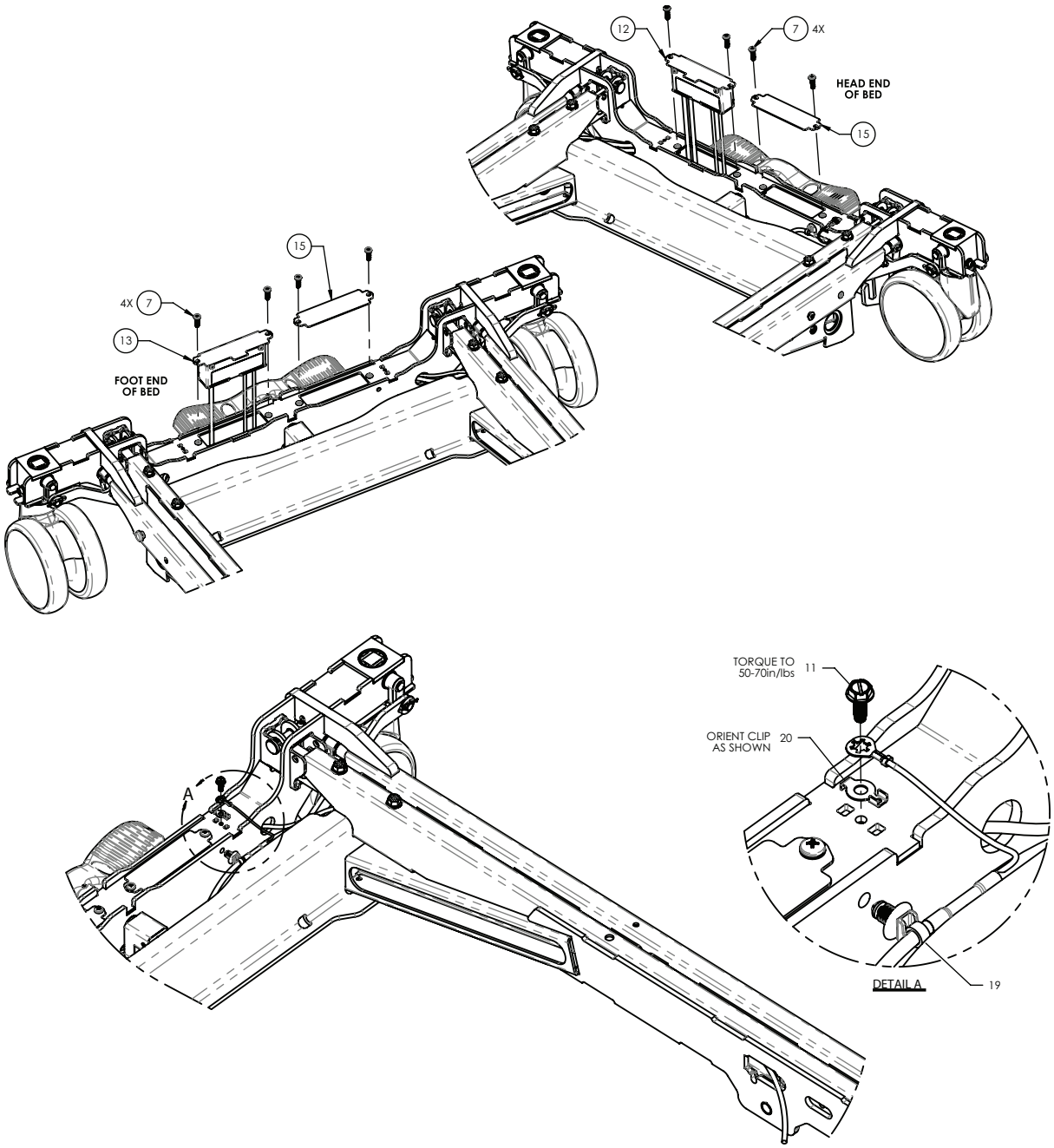
12
7
4X
HEAD END
OF BED
15
15
4X
7
13
FOOT END
OF BED
A
TORQUE TO
50-70in/lbs
11
ORIENT CLIP
AS SHOWN
20
DETAIL A
19

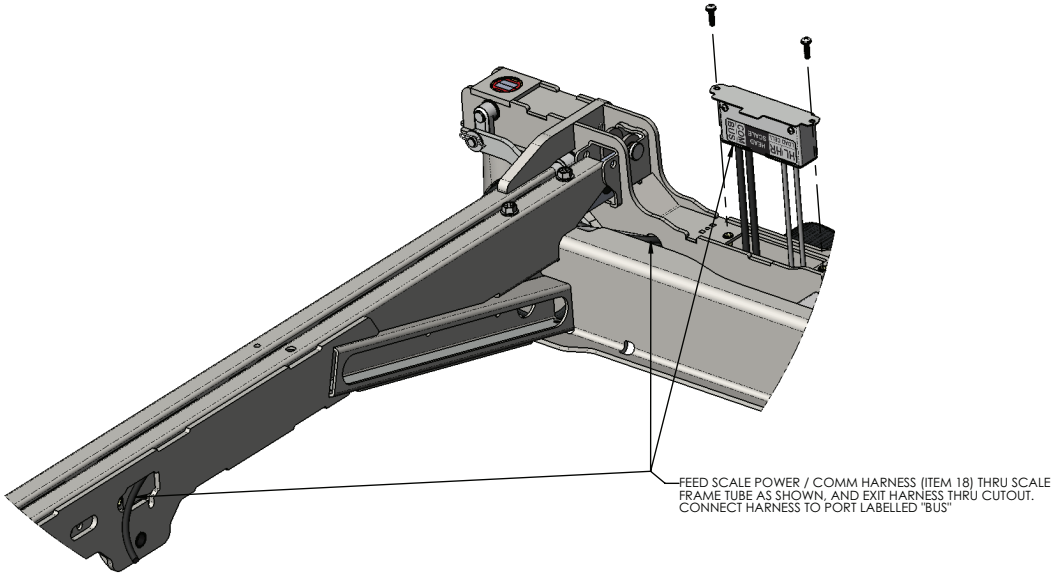

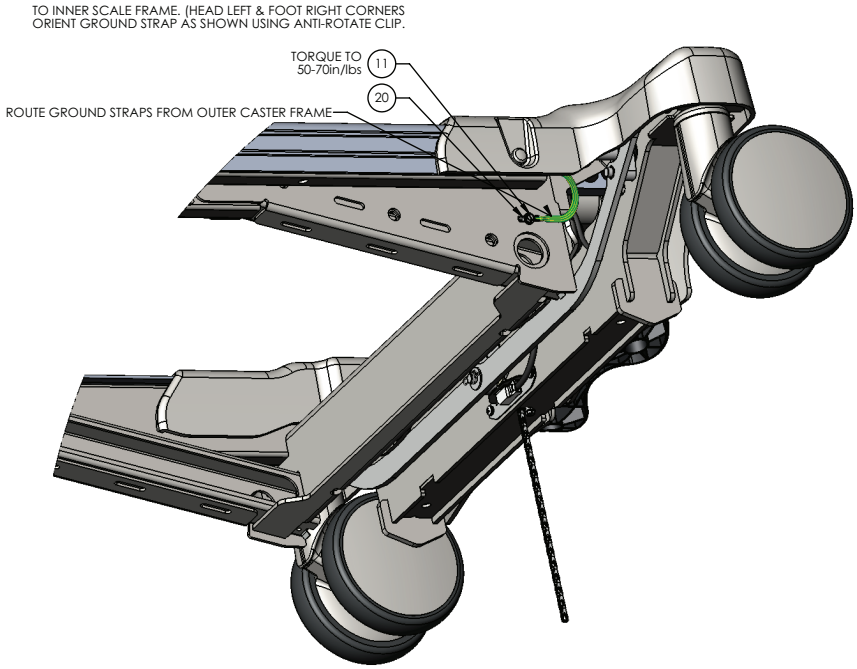

Item	Number	Name	Quantity
1	5900200182	*Caster frame assembly* (page 79)	1
2	5900200181	*Scale frame assembly* (page 83)	1
3	5900370089	Domed rivet	8
4	5900580005	Extrusion, lower frame side rail	2
5	5900350017	Snap-cap cover	8
6	5900350003	Snap-cap washer	8
7	5900340090	Pan screw	16
8	5900640006	Caster cover	2

Item	Number	Name	Quantity
9	5900350033	Clevis pin	4
10	0027-019-000	Rue ring	4
11	5900340079	Hex washer head screw	3
12	5900280039	*IOM scale-head electrical assembly - 5900280039* (page 77)	1
13	5900280040	*IOM scale-foot electrical assembly - 5900280040* (page 78)	1
15	5900520201P	Plate, caster bracket access cover-plated	2
16	5900430133	Harness, scale interconnect	1
17	5900430161	Harness, brake-steer detect (lower)	1
18	5900430162	Harness, scale pwr-comm (lower)	1
19	5900350041	Cable tie	1
20	5900520247	Ground strap clip	3
21	5900200188	Load cell linkage assembly with bushings	4
22	5900350035	Clevis pin	4
23	0027-022-000	Rue ring	4

IOM scale-head electrical assembly - 5900280039

Rev A (Reference only)

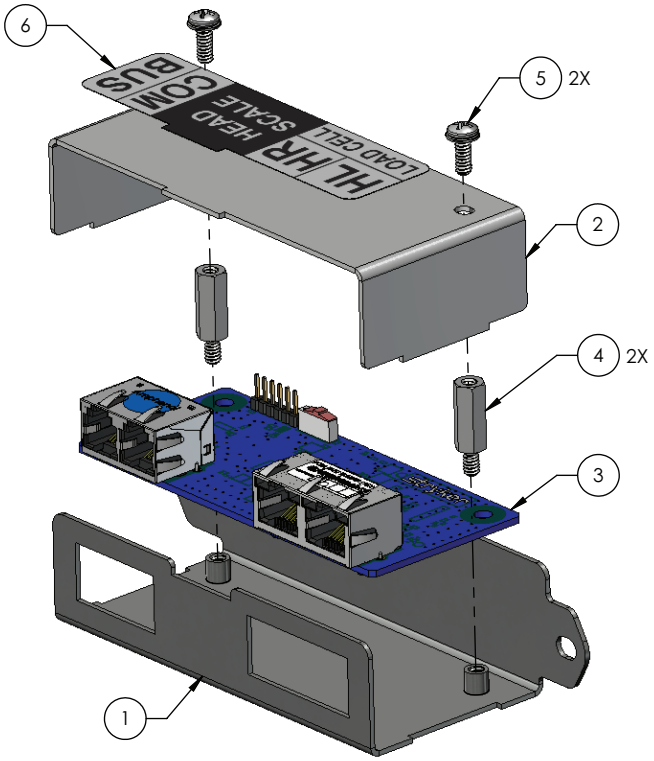

Item	Number	Name	Quantity
1	5900520181P	Bracket, smb backplate plated	1
2	5900520219P	Plate, smb backplate cover plated	1
3	590040003501	PCBA, IOM smb - head	1
4	5900370090	Standoff, thr hex m-f 0.25 x 0.625 #6-unc zinc	2
5	5900340071	Screw, sems pan ph #6-32x3/8lg int wash zinc pl	2
6	5900690068	Label, scale communication box, head end	1

IOM scale-foot electrical assembly - 5900280040

Rev A (Reference only)

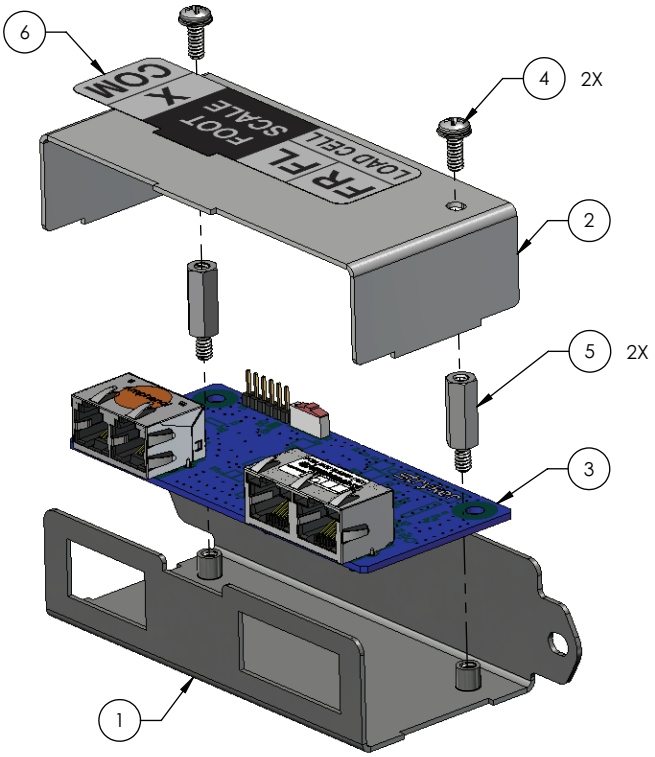

Item	Number	Name	Quantity
1	5900520181P	Bracket, smb backplate plated	1
2	5900520219P	Plate, smb backplate cover plated	1
3	590040003502	PCBA, IOM smb - foot	1
4	5900340071	Screw, sems pan ph #6-32x3/8lg int wash zinc pl	2
5	5900370090	Standoff, thr hex m-f 0.25 x 0.625 #6-unc zinc	2
6	5900690067	Label, scale communication box, foot end	1

Caster frame assembly

5900200182 Rev B (Reference only)

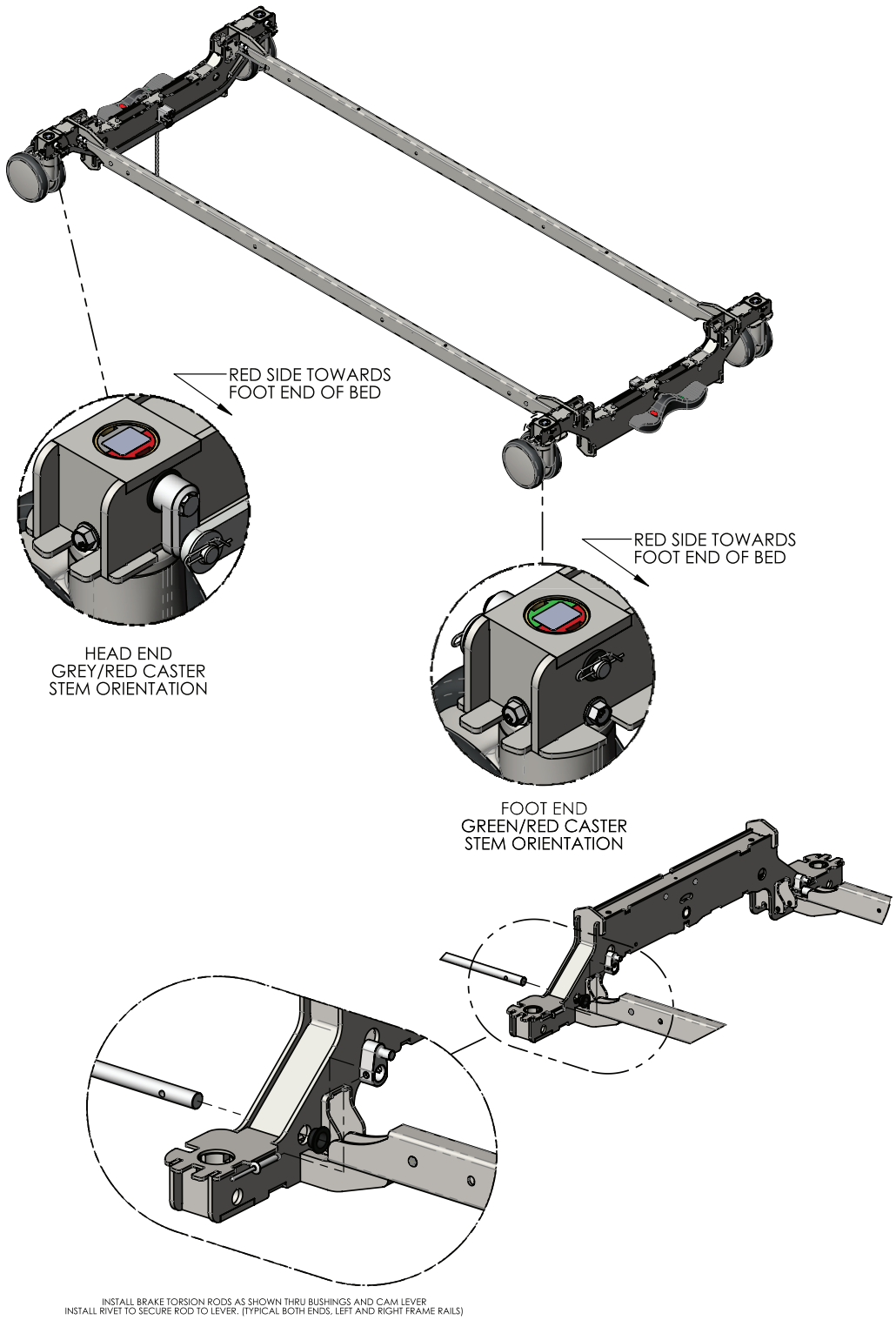

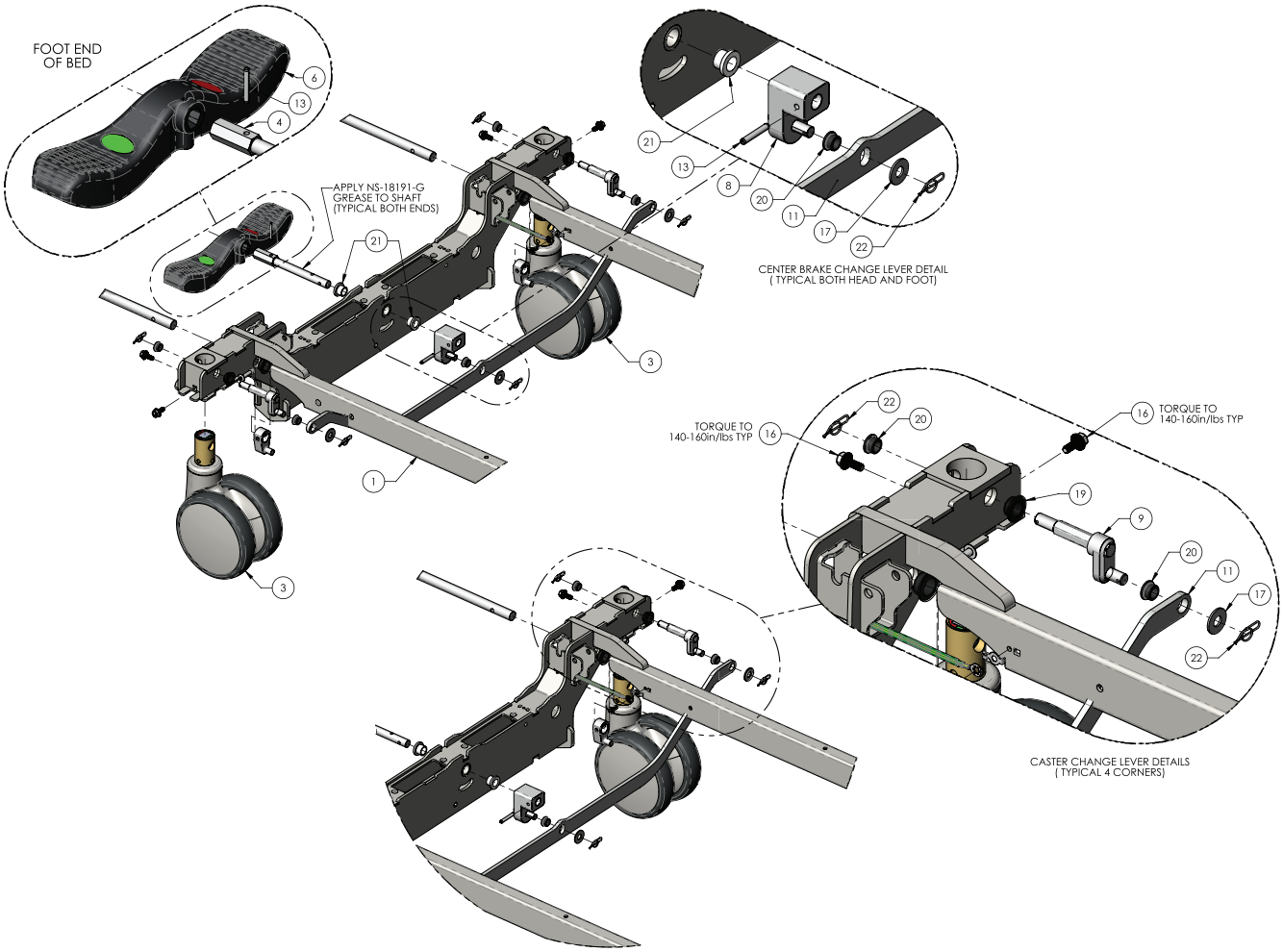
FOOT END
OF BED
6
13
4
APPLY NS-18191-G
GREASE TO SHAFT
(TYPICAL BOTH ENDS)
21
3
1
3
21
13
8
20
11
17
22
CENTER BRAKE CHANGE LEVER DETAIL
(TYPICAL BOTH HEAD AND FOOT)
TORQUE TO
140-160in/lbs TYP
16
22
20
16
TORQUE TO
140-160in/lbs TYP
19
9
20
11
17
22
CASTER CHANGE LEVER DETAILS
(TYPICAL 4 CORNERS)

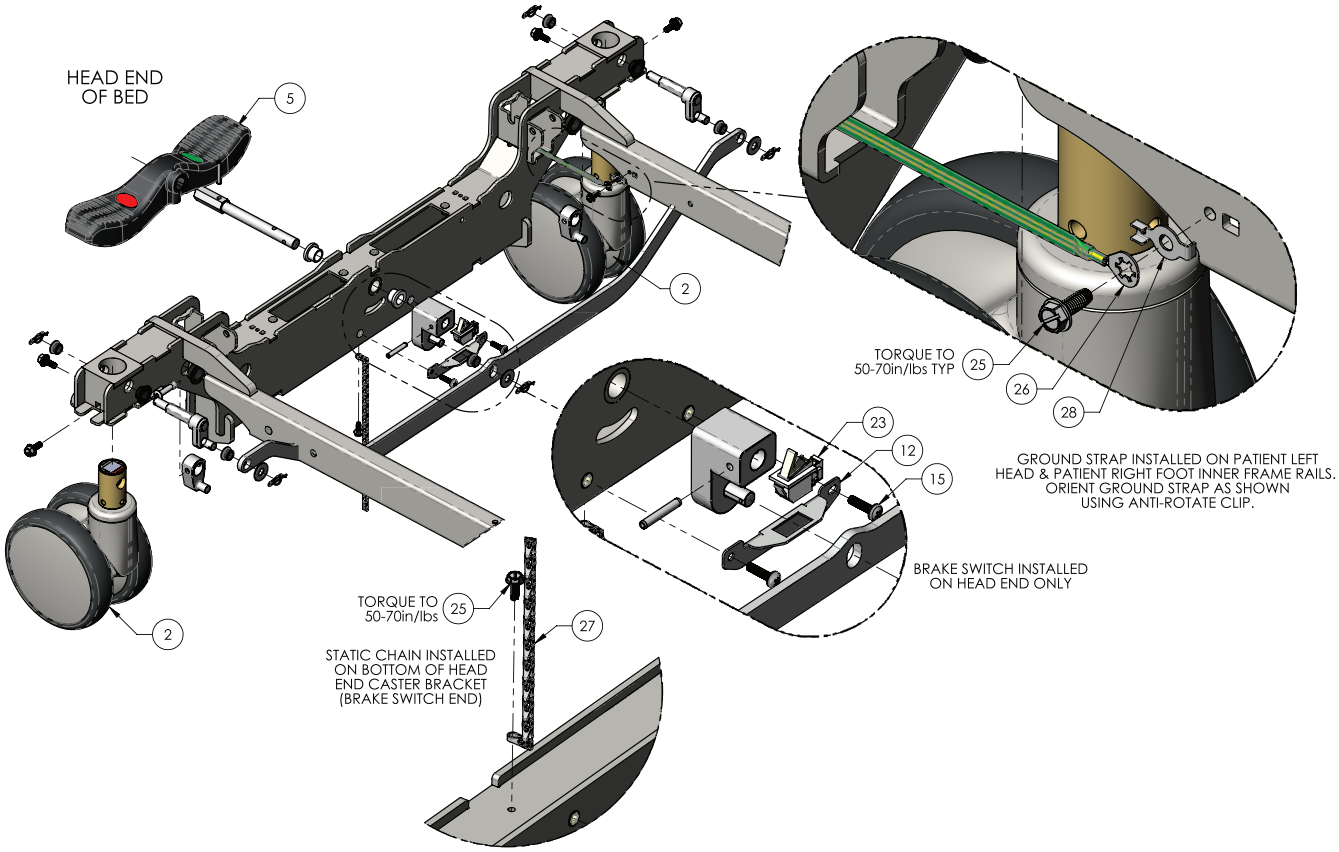

Item	Number	Name	Quantity
1	5900200183	Frame weldment, caster frame with inserts – gen 3	1
2	5900360004	Caster, 558X twin wheel, head, Ø6”, white	2
3	5900360005	Caster, 559X twin wheel, foot, Ø6”, white	2
4	5900500168P	Shaft, composite brake pedal head plated	2
5	5900200045	Brake pedal-composite assembly w/labels-head	1
6	5900200161	Brake pedal-composite assembly w/labels-foot	1
7	5900560024	Lever, brake rod linkage	4
8	5900560025	Foot pedal change lever – S1 gen 2	2
9	5900560026	Lever, caster change	4
10	5900500124	Brake transfer rod, 5/8” – Spirit one	2
11	5900540229	Linkage, brake connecting – S1	2
12	5900520180P	Bracket, brake switch – S1 plated	1
13	0026-012-000	Pin, spring 3/16” x 1.25”LG blk ox	4
15	5900340090	Screw, sems pan ph #10-32UNF x 3/4LG int wash zinc	2
16	5900340121	Screw, serrated hex FLG M6 x 16mm lg zinc	8
17	5900320027	Washer, flat 3/8 x 7/8 x 0.063 nylon	6
18	5900330014	Bushing, FLG 0.625x0.750x0.375LG (FLG 1.000x0.062)	4
19	5900330020	Bushing, FLG 0.500x0.625x0.313LG (FLG 0.875x0.062)	4
20	5900330003	Bushing, FLG 0.375x0.500x0.313LG (FLG 0.625x0.062)	14

Item	Number	Name	Quantity
21	5900330022	Bushing, FLG 0.510x0.633x0.500LG (FLG 0.875x0.125)	4
22	0027-022-000	Rue ring, 3/8”	10
23	5900410030	Switch, SPDT-N/O-N/C omron D3D-211	1
24	5900370089	Rivet, 1/4 x 1” domed zinc plated steel	4
25	5900340079	Screw, #10-32 x 1/2LG hex washer head elec ground	3
26	5900430150	HRNS, GND braid E	2
27	3001-200-052	Chain, sash #8 zinc steel-static ground	1
28	5900520247	Clip, ground strap anti rotate ring	2

Scale frame assembly

5900200181 Rev A (Reference only)

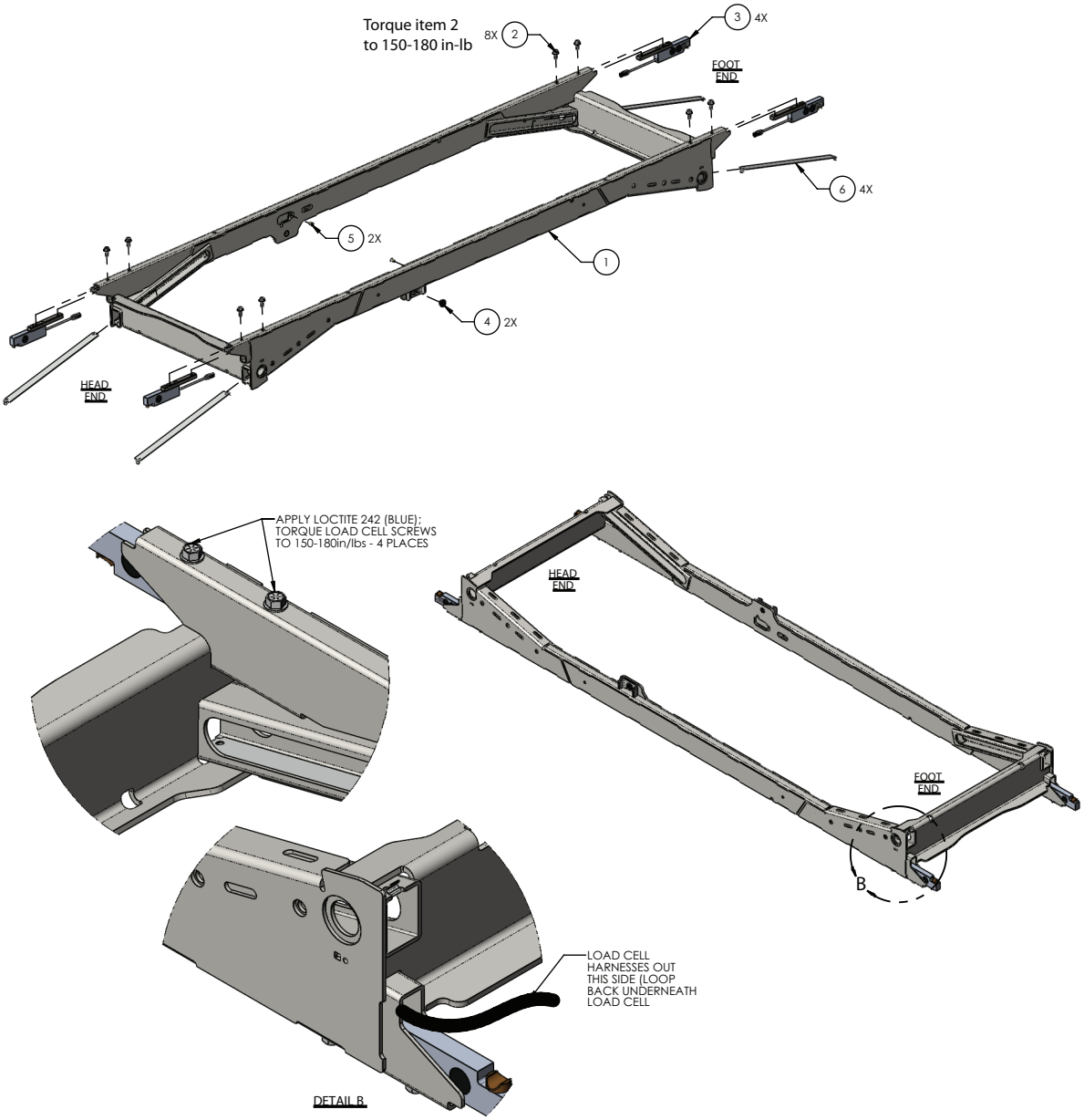

Item	Number	Name	Quantity
1	5900240100	Weldment, lower inner frame	1
2	5900340092	Screw, serrated hex flg 5/16-UNC x 0.75LG zinc	8
3	5900280028	*Load cell sensor assembly - 5900280028* (page 84)	4
4	5900330020	Bushing, flg 0.500X0.625X0.313LG (FLG 0.875X0.062)	2
5	5900310020	Nutsert, #10-UNF thick sheet hex body-zinc	2
6	5900520226	Wear strip, HILO lift slide	4

Load cell sensor assembly - 5900280028

Rev A (Reference only)

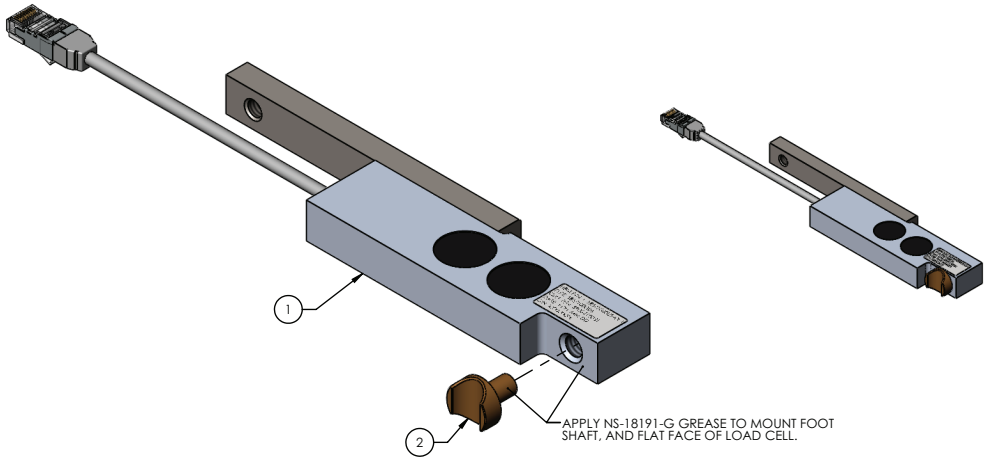

Item	Number	Name	Quantity
1	5900410031	Sensor, load cell K-SBS	1
2	5900500175	Load cell mount foot	1

Hi-low frame assembly

5900200174 Rev A (Reference only)

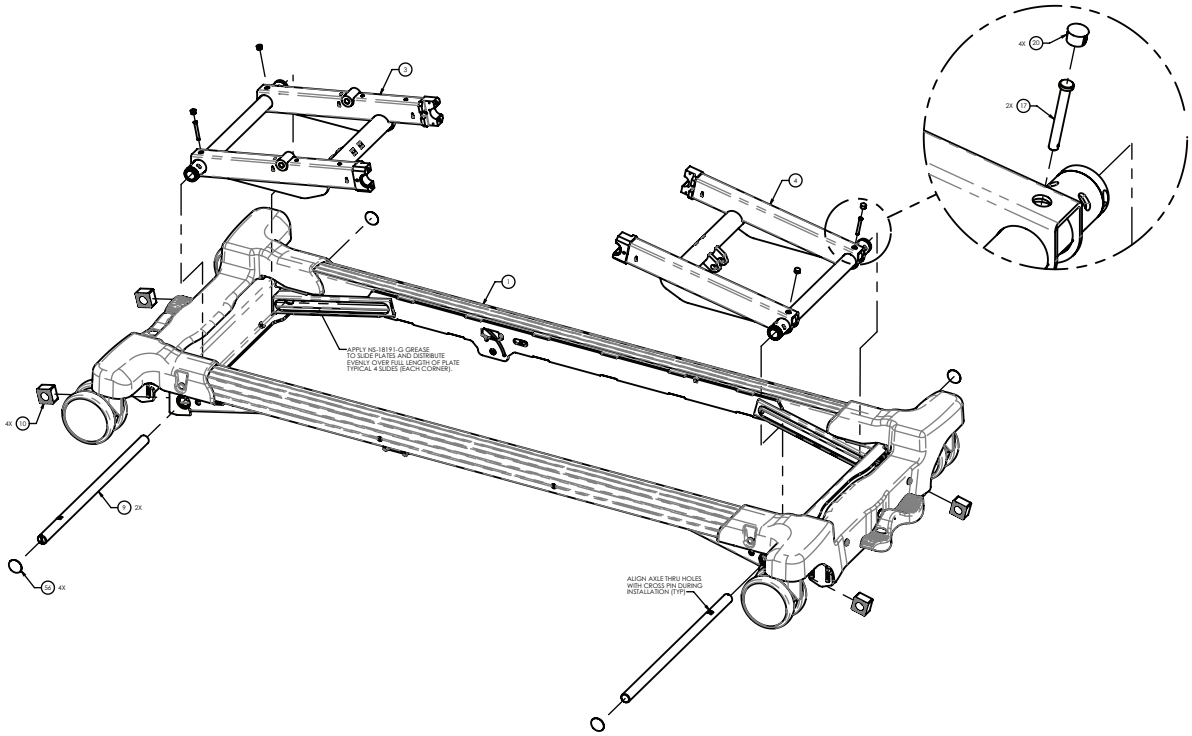

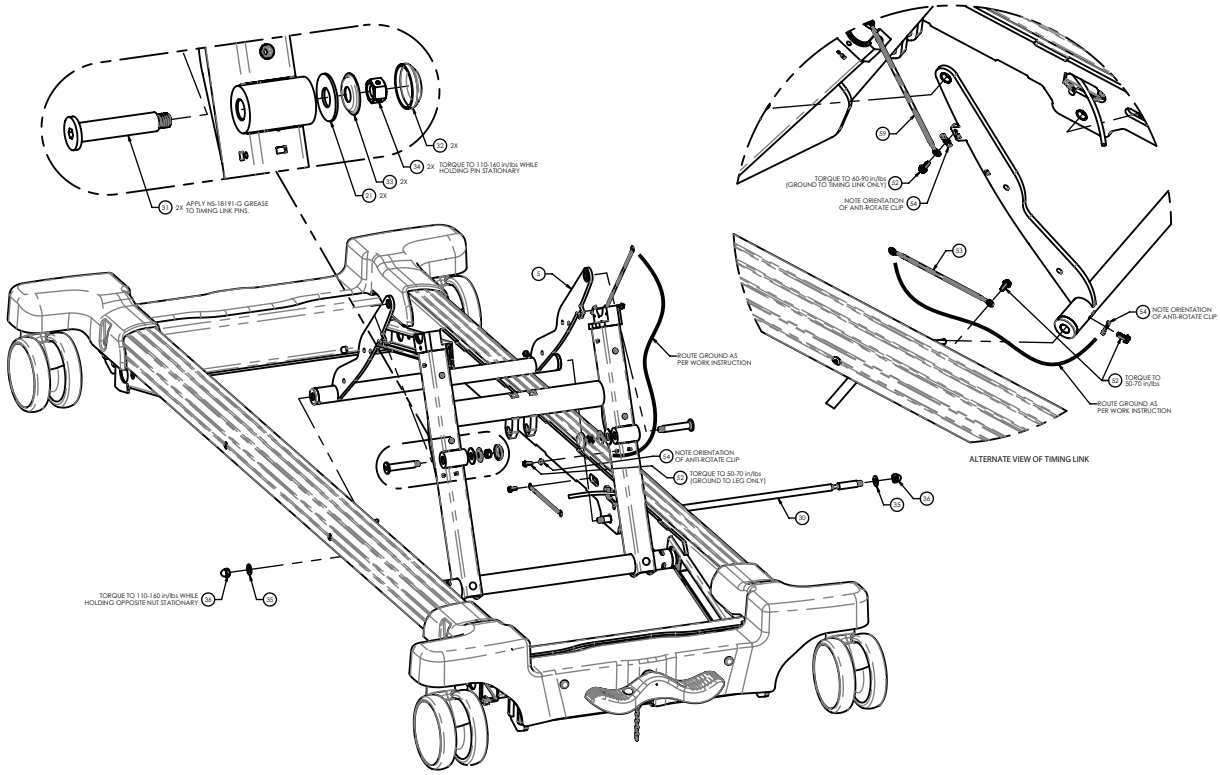

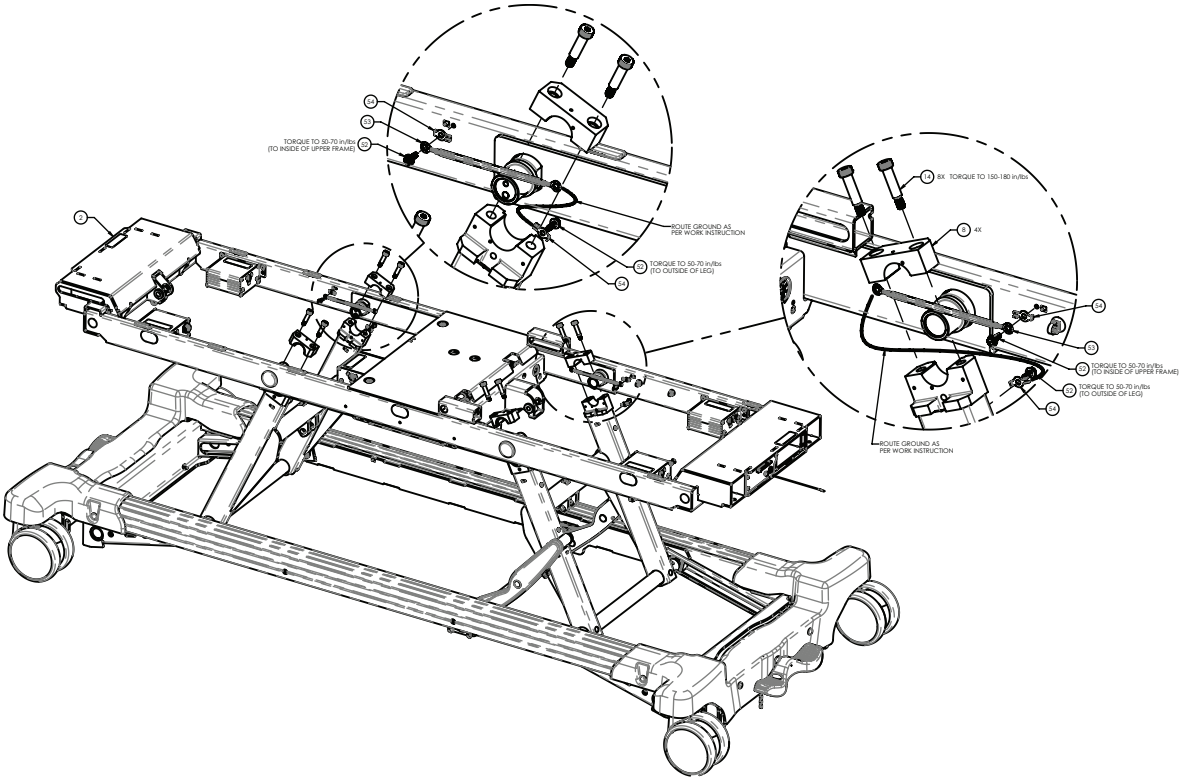
TORQUE TO 50-70 in/lbs
(TO INSIDE OF UPPER FRAME)
ROUTE GROUND AS
PER WORK INSTRUCTION
TORQUE TO 50-70 in/lbs
(TO OUTSIDE OF LEG)
8X TORQUE TO 150-180 in/lbs
4X
TORQUE TO 50-70 in/lbs
(TO INSIDE OF UPPER FRAME)
TORQUE TO 50-70 in/lbs
(TO OUTSIDE OF LEG)
ROUTE GROUND AS
PER WORK INSTRUCTION

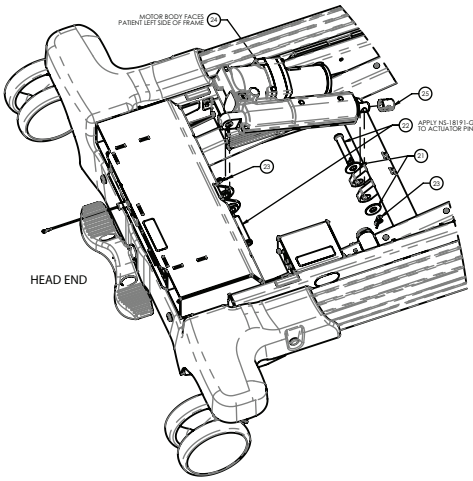
MOTOR BODY FACES
PATIENT LEFT SIDE OF FRAME
APPLY NS-18191-G GREASE
TO ACTUATOR PINS.
HEAD END

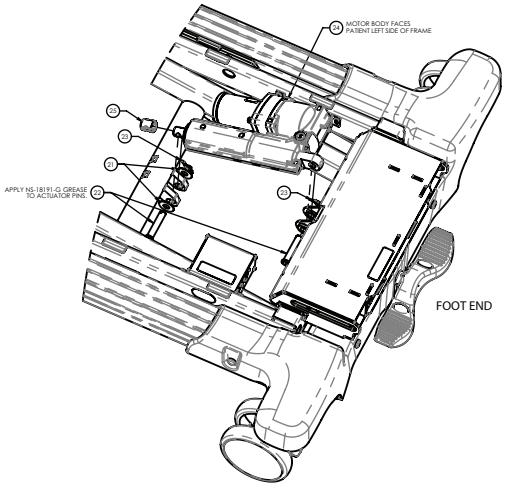
MOTOR BODY FACES
PATIENT LEFT SIDE OF FRAME
APPLY NS-18191-G GREASE
TO ACTUATOR PINS.
FOOT END

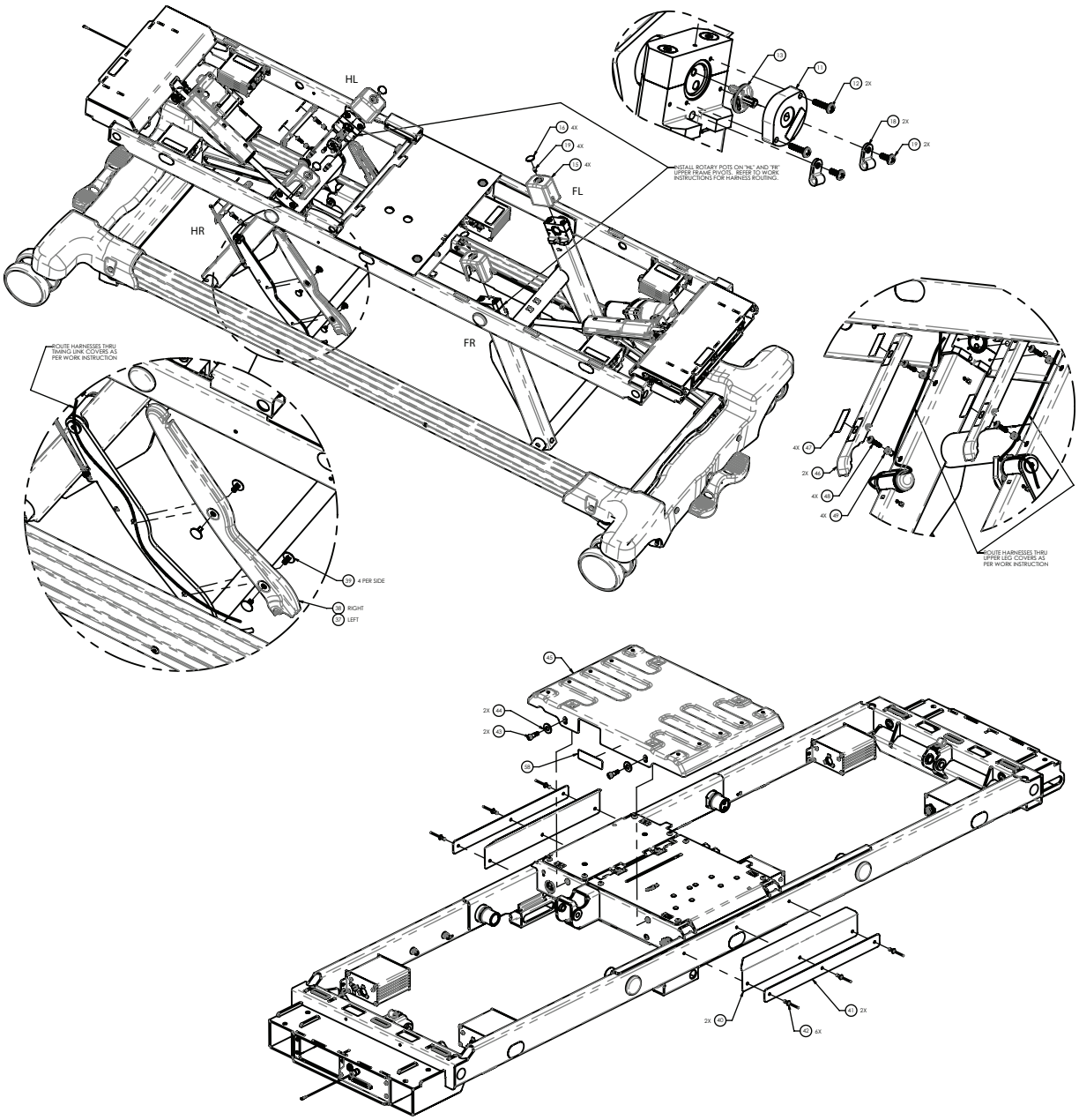
HL
HR
FL
FR
INSTALL ROTARY POTS ON "HL" AND "FR" UPPER FRAME PIVOTS. REFER TO WORK INSTRUCTION 3 FOR HARNESS ROUTING.
ROUTE HARNESSES THRU TIMING LINK COVERS AS PER WORK INSTRUCTION
ROUTE HARNESSES THRU UPPER LEG COVERS AS PER WORK INSTRUCTION
4 PER SIDE
RIGHT
LEFT

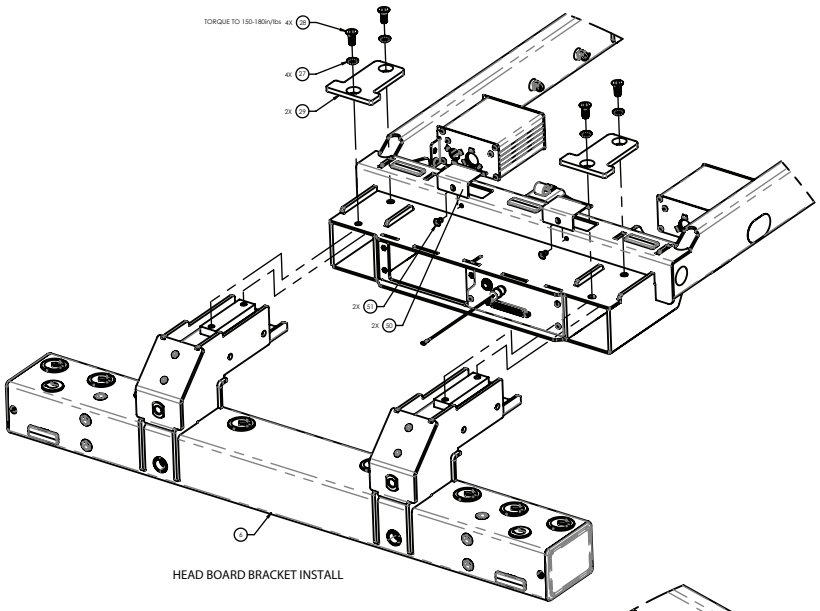

HEAD BOARD BRACKET INSTALL

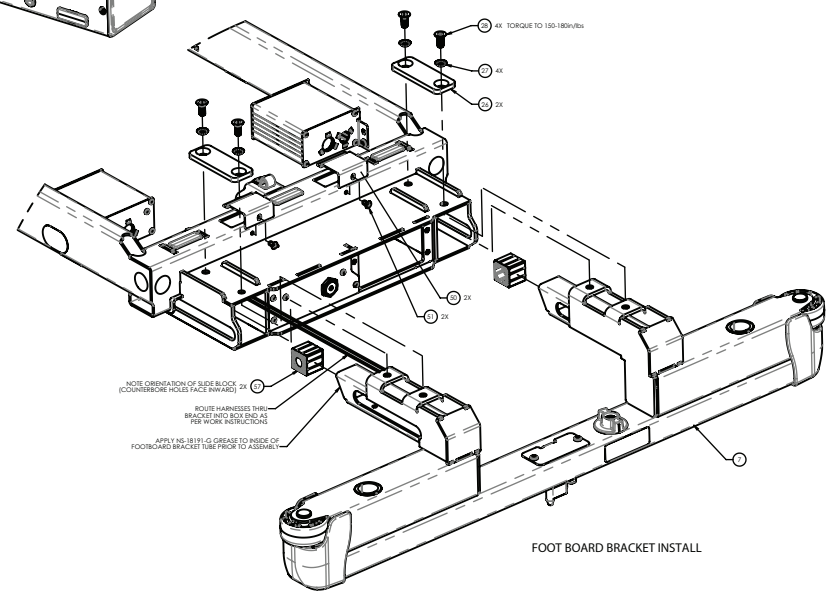

FOOT BOARD BRACKET INSTALL

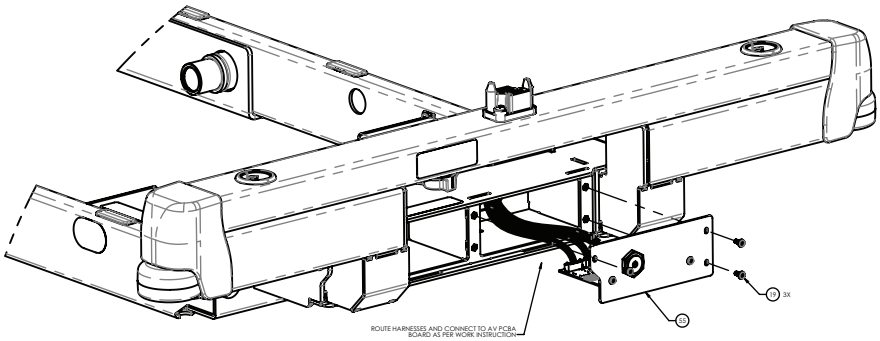

AUDIO-VIDEO ASSY INSTALL

Item	Number	Name	Quantity
1	5900200180	*HILO frame assembly* (page 73)	1
2	5900200120	*Upper frame assembly* (page 103)	1
3	5900240099	Weldment, primary leg head end	1
4	5900240098	Weldment, primary leg foot end	1
5	5900200121	*Timing link assembly* (page 91)	1

Item	Number	Name	Quantity
6	5900200134	*Headboard support bracket assembly* (page 92)	1
7	5900200135	*Footboard support bracket assembly* (page 93)	1
8	5900500116P	Cap, bearing block leg pivot plated	4
9	5900500121P	Rod, lower leg pivot axle plated	2
10	5900600072	Slide block, primary leg lift	4
11	5900410034	Sensor, leg position rotary pot	2
12	5900320023	Screw, sems pan head ph #6-32 x 5/8” lg zinc pl	4
13	5900600061	Cap, leg pot index	2
14	5900340027	Screw, shldr 3/8 x 1.25-5/16 unc zinc	8
15	5900600060	Cover, hilo lift leg rotary sensor	4
16	5900690017	Overlay, blank Ø1.00 round white	4
17	5900350030	Pin, clevis Ø1/4 x 2 (1-13/16) lg zinc pl	2
18	5900350038	Clamp, p-clip 3/16” nylon loop-black	4
19	5900340071	Screw, sems pan ph #6-32x3/8lg int wash zinc pl	11
20	5900370110	Plug, push-in round plastic 1/2”	4
21	5900320029	Washer, flat 1/2 x 1-1/4 x 0.063 nylon	6
22	5900350039	Pin, clevis 1/2 x 2-1/2 lg, c1018 steel ZnPl	4
23	0027-034-000	Rue ring, Ø1/2”	4
24	5900420010	Actuator, hilo eha 245W 16kN 8in parker 649346	2
25	5900600074	Protective cap, parker eha rod end	2
26	5900540245P	Plate, footboard clamp-plated	2
27	5900320022	Washer, ext tooth lock-5/16” ctsk zinc	8
28	5900340081	Screw, flat Torx head 5/16-18 x 3/4 tri lobe zinc	8
29	5900540244P	Plate, headboard clamp-plated	2
30	5900500113	Pivot rod, timing link	1
31	5900500114P	Hinge pin, timing link-plated	2
32	0037-196-000	Pan washer cap	2
33	5900370105	Pan washer, 1” od x 3/8” id x 0.120” thk	2
34	0016-089-000	Nut, hex reg 3/8-unc (center lock)	2
35	0011-004-000	Washer, flat 3/8 sae-zinc	2
36	5900310018	Nut, hex acorn 3/8-16 unc-distorted thread sst	2
37	5900600070	Cover, timing link arm PL	1
38	5900600071	Cover, timing link arm PR	1
39	5900350029	Rivet, intrlck shank Ø.281”x.50-.81” thk nyl blk	8
40	5900690055	Guard, splash upper litter frame	2
41	5900540267P	Plate, splash guard clamp plated	2
42	0025-079-000	Rivet, 3/16 domed sst	6
43	5900340098	Screw, shss Ø5/16x1/2 lg, 1/4-20unc ss nylon patch	2
44	5900320027	Washer, flat 3/8 x 7/8 x 0.063 nylon	2
45	5900640005	OBS cover, belly pan abs	1
46	5900600077	Guard, hilo leg cableway	1
47	5900690015	Overlay, exp headboard, clip	4
48	5900340090	Screw, sems pan ph #10-32unf x 3/4lg int wash zinc	4
49	5900310020	Nutsert, #10-unf thick sheet hex body-zinc	4

Item	Number	Name	Quantity
50	5900520223	Access cover, upper frame	4
51	0025-077-000	Rivet, Ø3/16x0.251-0.375 grip, alum, usm ad66abs	4
52	5900340079	Screw, #10-32 x 1/2lg hex washer head elec ground	8
53	5900430150	HRNS, gnd braid E	3
54	5900520247	Clip, ground strap anti rotate ring	7
55	5900280034	*Audio-video electrical assembly - 5900280034* (page 96)	1
56	5900690090	Overlay, pivot axle access hole	4
57	5900600073	Slide block, fowler & vascular	2
58	5900180098	Label, electrical shock warning	1
59	5900430143	HRNS, gnd braid D	1

Timing link assembly

5900200121 Rev C (Reference only)

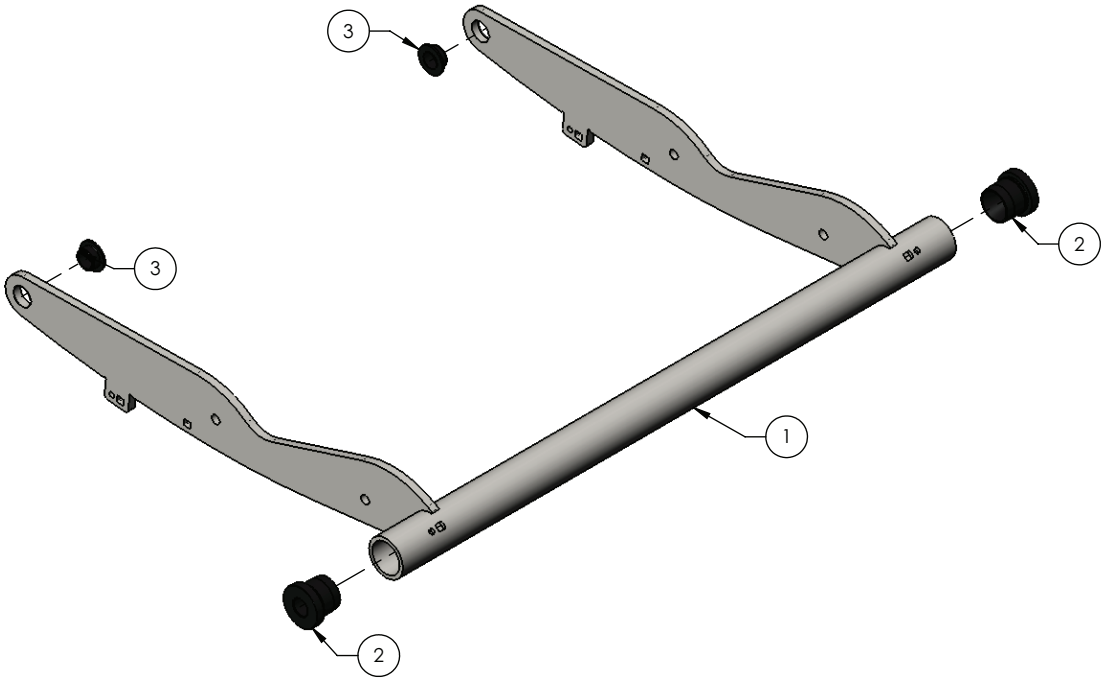

Item	Number	Name	Quantity
1	5900240095	Timing link weldment	1
2	5900620026	Bushing, timing link	2
3	5900330020	Bushing, flg 0.500X0.625X0.313LG (flg 0.875X0.062)	2

Headboard support bracket assembly

5900200134 Rev A (Reference only)

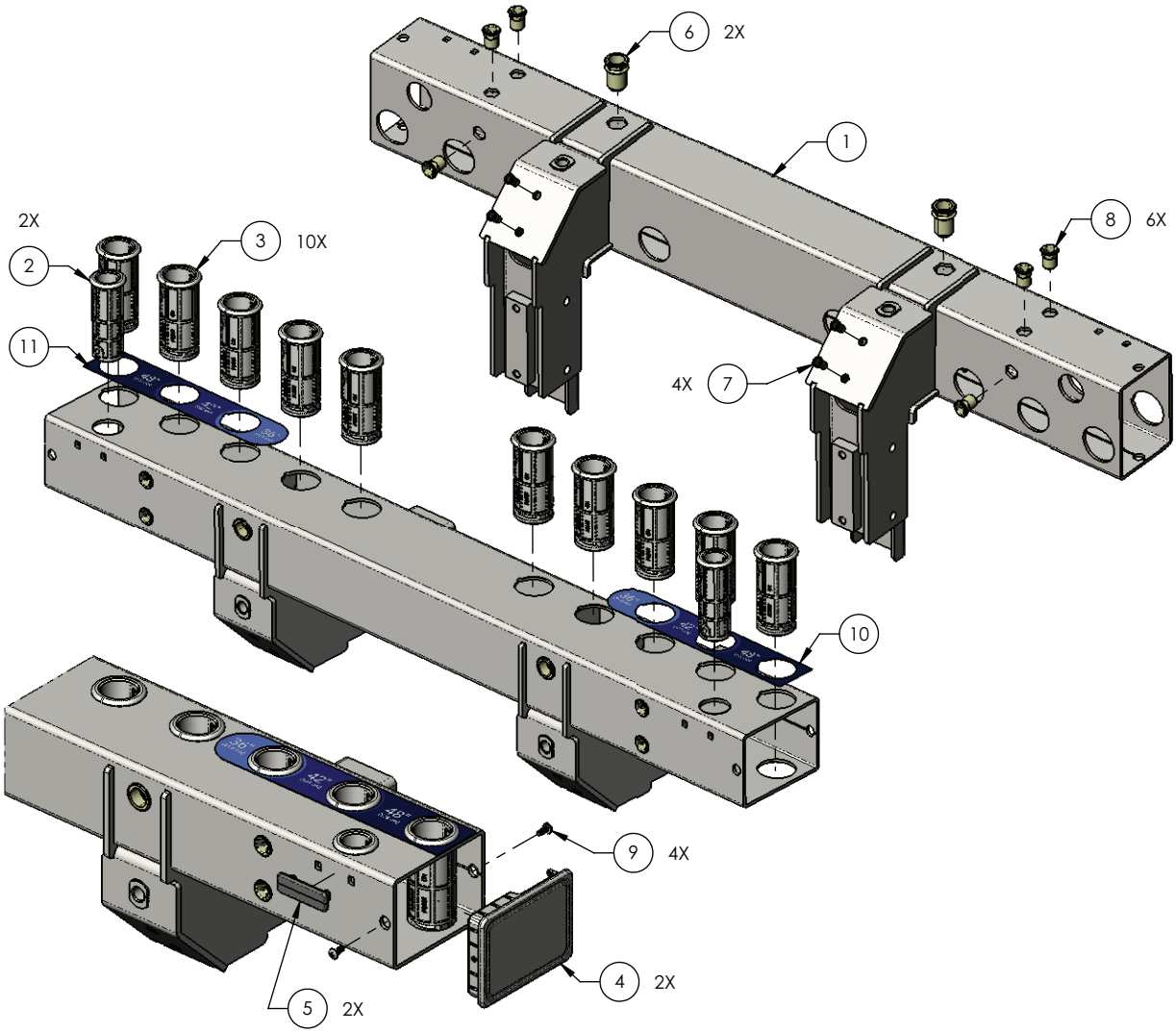

Item	Number	Name	Quantity
1	5900240111	Weldment, headboard support bracket	1
2	5900600038	Socket, headboard IV pole	2
3	5900600039	Socket, headboard post	10
4	5900600066	End plug, 4x3 tube	2
5	5900600067	Bumper pad, snap-in hard stop	2
6	5900310012	Nutsert, 1/2-13 unc half-hex low-profile zinc	2
7	5900310020	Nutsert, #10-unf thick sheet hex body-zinc	4
8	5900310025	Nutsert, 5/16-unc hex body	6
9	5900340010	Screw, pan ph #8-unc x 0.375 tri lobe	4
10	5900690070	Label, post location exp headboard PR	1
11	5900690071	Label, post location exp headboard PL	1

Footboard support bracket assembly

5900200135 Rev B (Reference only)

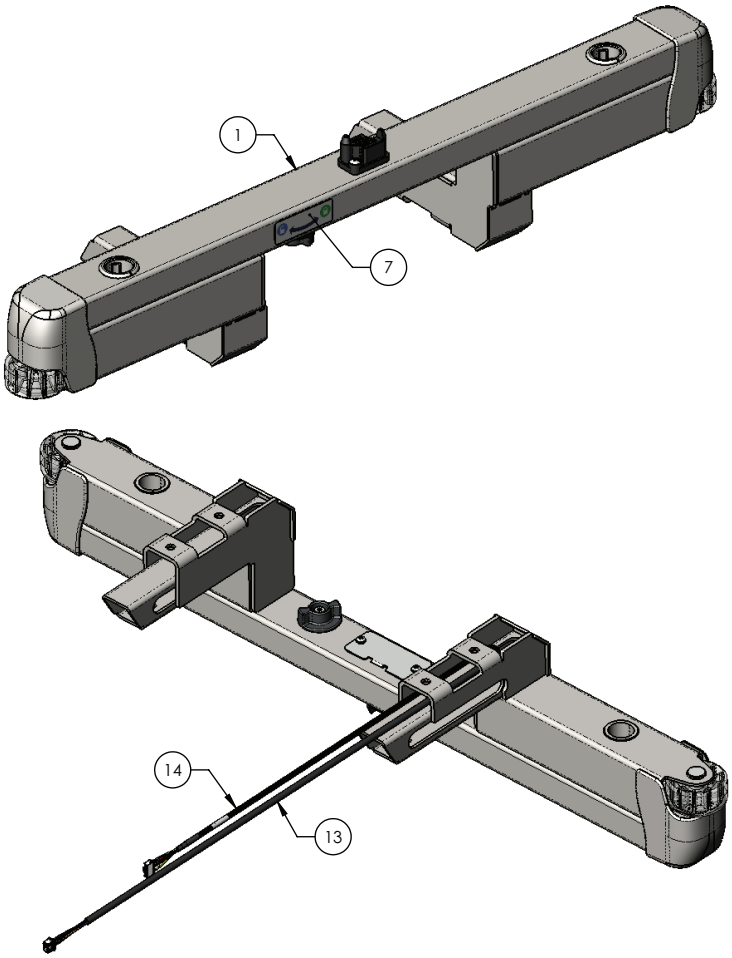

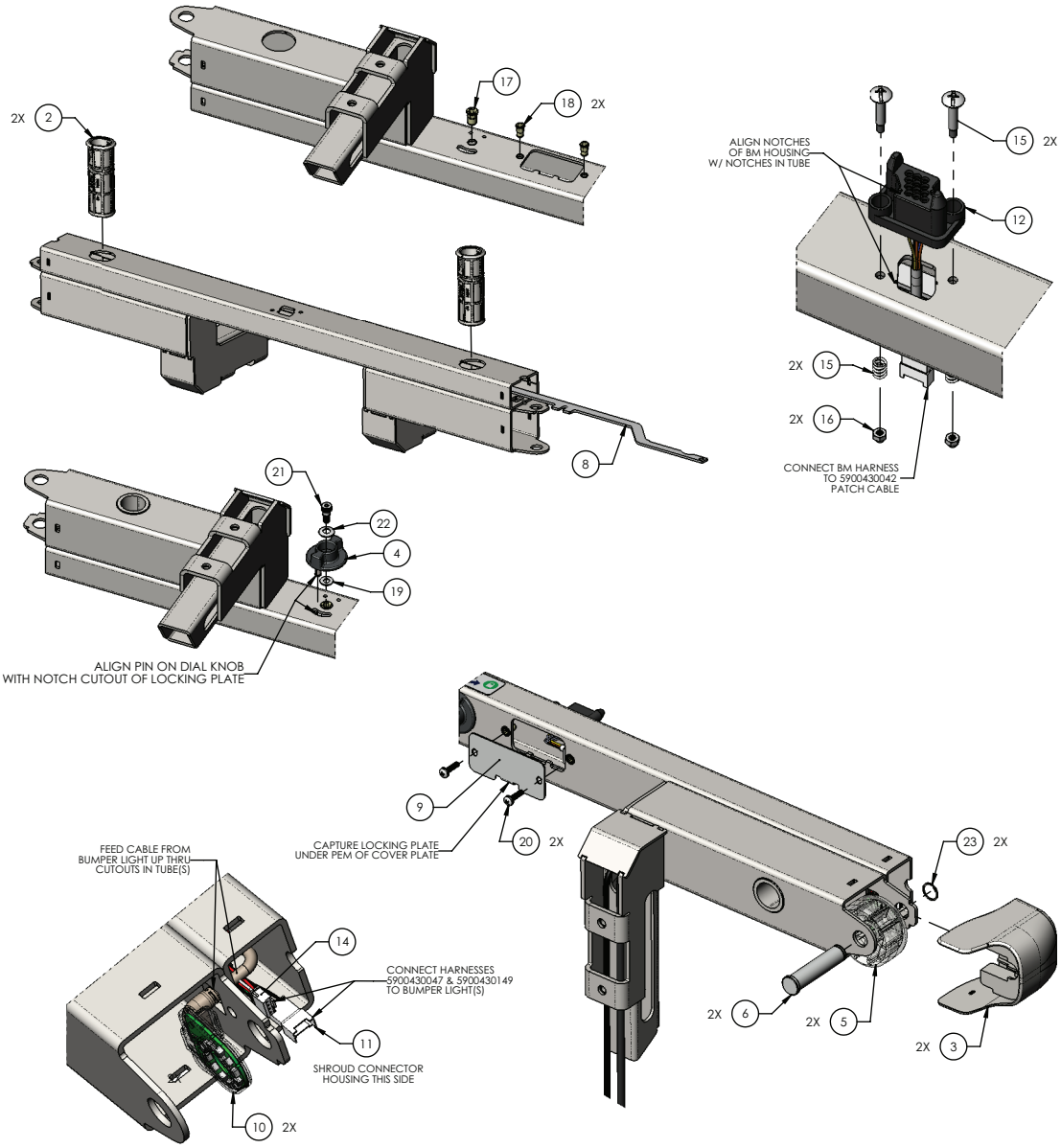

Item	Number	Name	Quantity
1	5900240112	Weldment, footboard support bracket	1
2	5900600011	Socket, footboard post	2
3	5900600013	Bumper shroud, footboard bracket	2
4	5900600037	Dial knob, head & footboard locking	1
5	5900600088	Corner bumper, molded 2-1/2” od	2
6	5900500068P	Clevis pin, bumper wheel plated	2
7	5900690080	Label, lock/unlock footboard	1
8	5900540044P	Plate, locking footboard plated	1
9	5900520202P	Cover plate, footboard blind mate plated	1
10	5900280053	Light assembly, iBed bumper light	2
11	5900430149	HRNS, bumper light jumper cable	1
12	5900430120	HRNS, fsc bracket	1

Item	Number	Name	Quantity
13	5900430042	HRNS, lower blindmate patch cable	1
14	5900430047	HRNS, watchdog lights	1
15	5900410054	Hardware kit, drawer conn, metrimate	1
16	5900310024	Nut, hex M4x0.7 zinc	2
17	5900310007	Nutsert, 1/4-unc hex body	1
18	5900310020	Nutsert, #10-unf thick sheet hex body-zinc	2
19	0011-303-000	Washer, large dia flat Ø17/64 id x Ø9/16 od zinc	1
20	5900340090	Screw, sems pan ph #10-32unf x 3/4lg int wash zinc	2
21	5900340095	Screw, shss Ø5/16x1/4 lg, 1/4-20 unc locking patch	1
22	5900320009	Spring washer, acetal Ø.32” id x Ø.66” od	1
23	5900350045	Ring, spiralox rtng ext 0.625 sst	2

Audio-video electrical assembly - 5900280034

Rev A (Reference only)

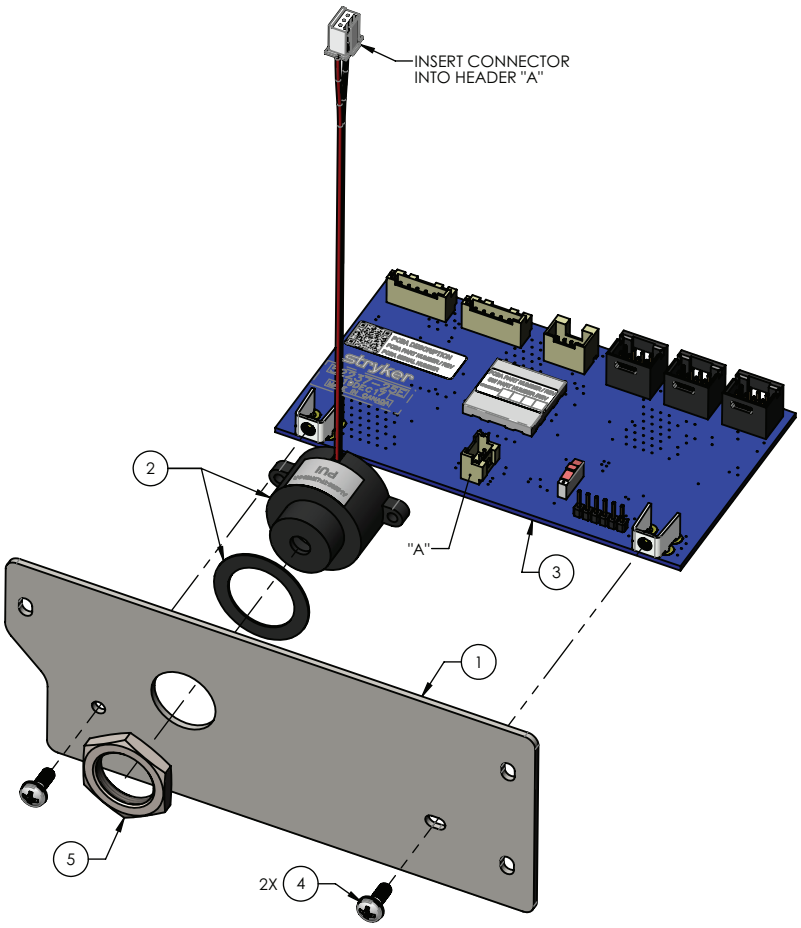

Item	Number	Name	Quantity
1	5900540220P	Faceplate, AV board-plated	1
2	5900280035	Speaker, piezo 12VDC 100dB	1
3	5900400039	PCBA, IOM AVB	1
4	5900340071	Screw, sems pan ph #6-32x3/8lg int wash zinc pl	2
5	5900310013	Nut, thin hex m18 x 1.0 ss	1

Top level assembly

5900103005 Rev AA (Reference only)

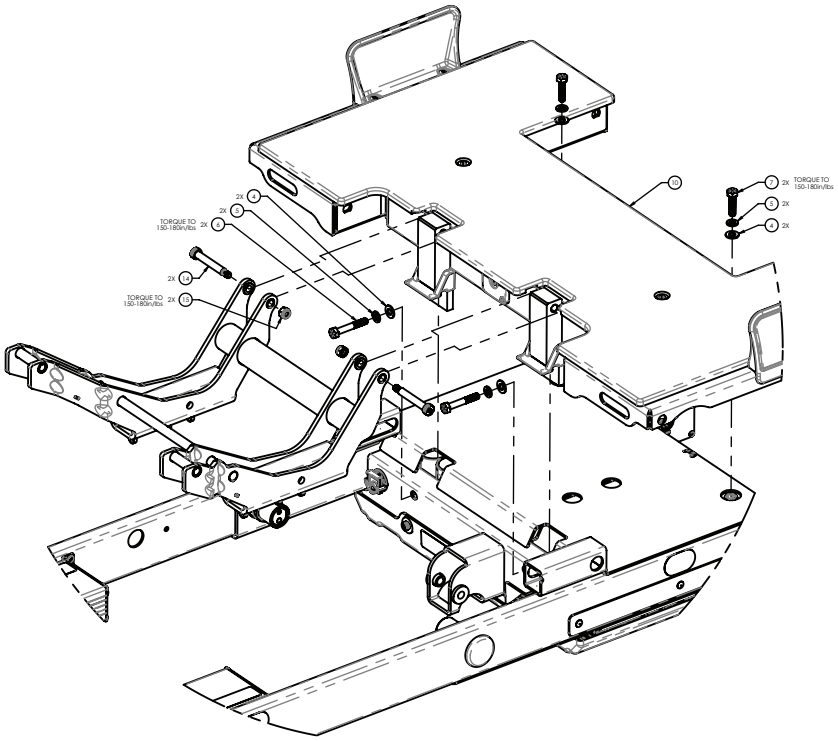

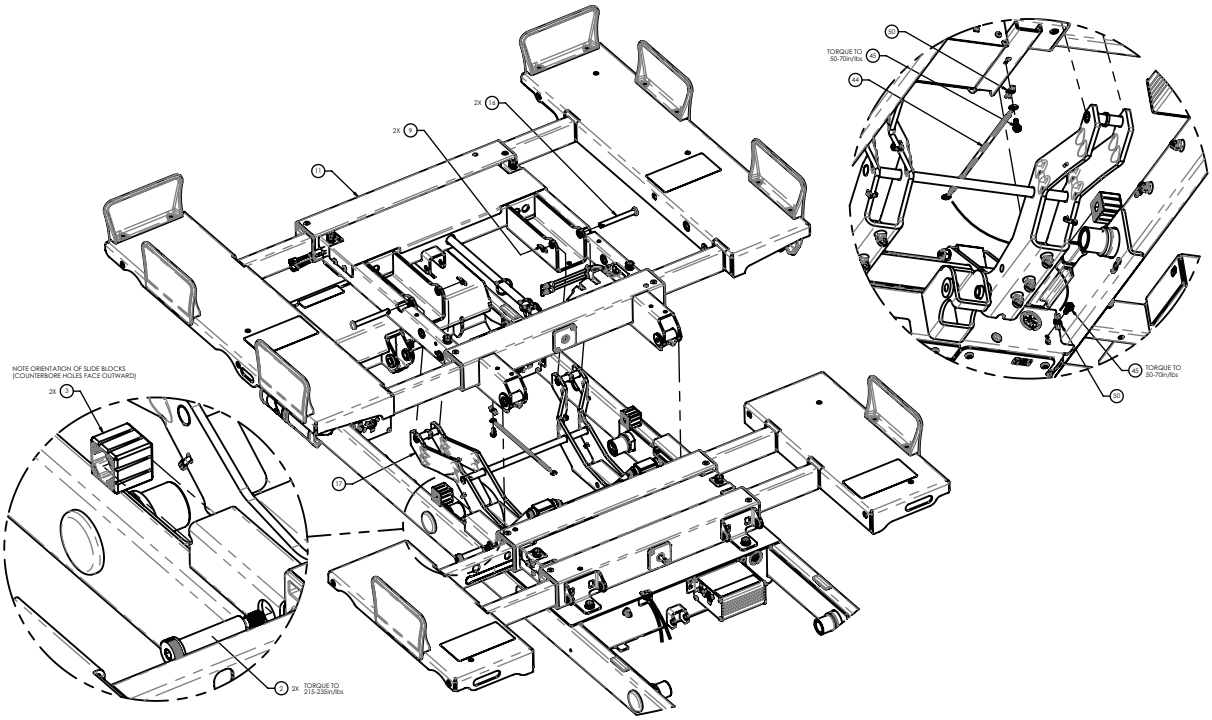

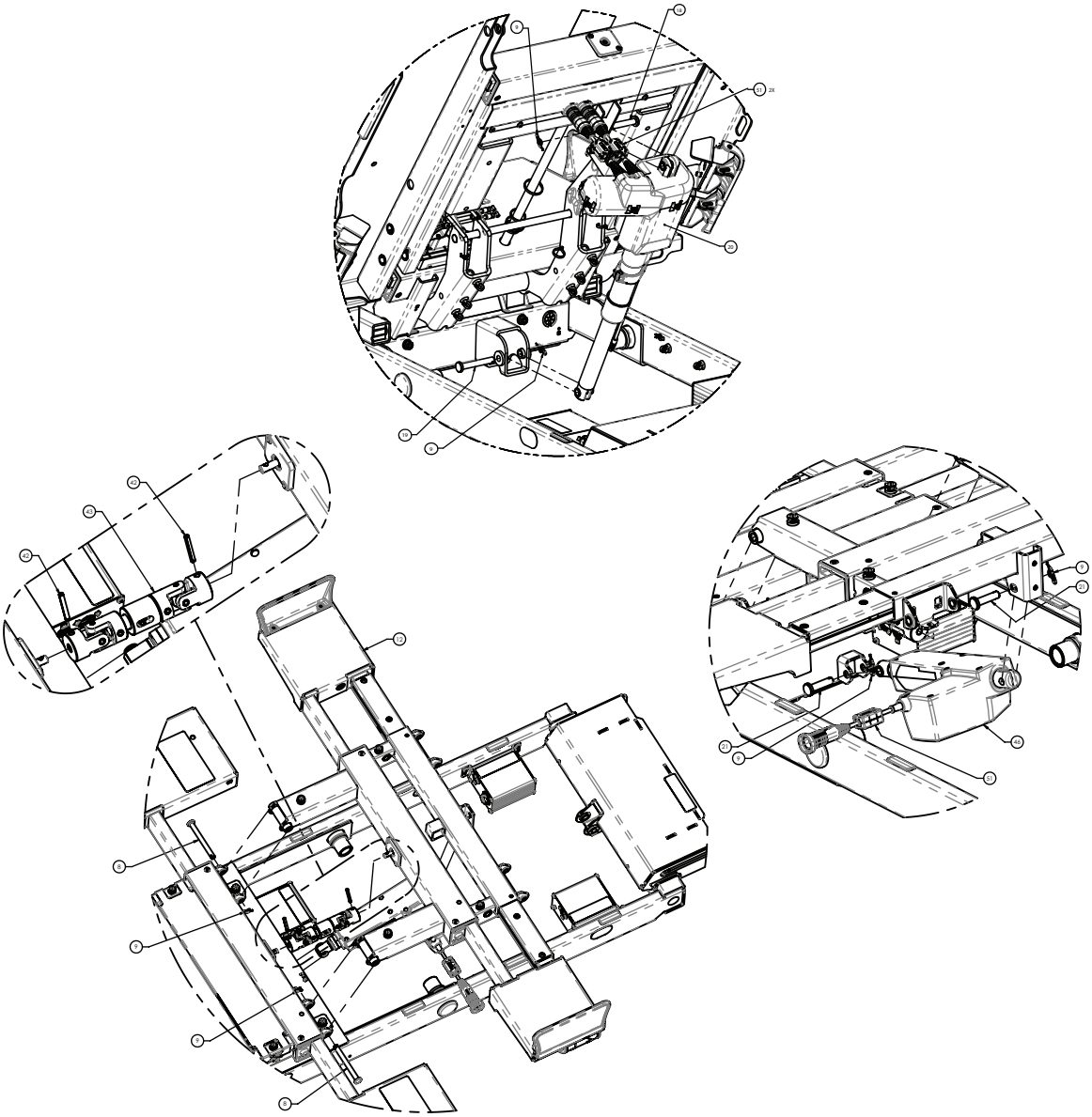

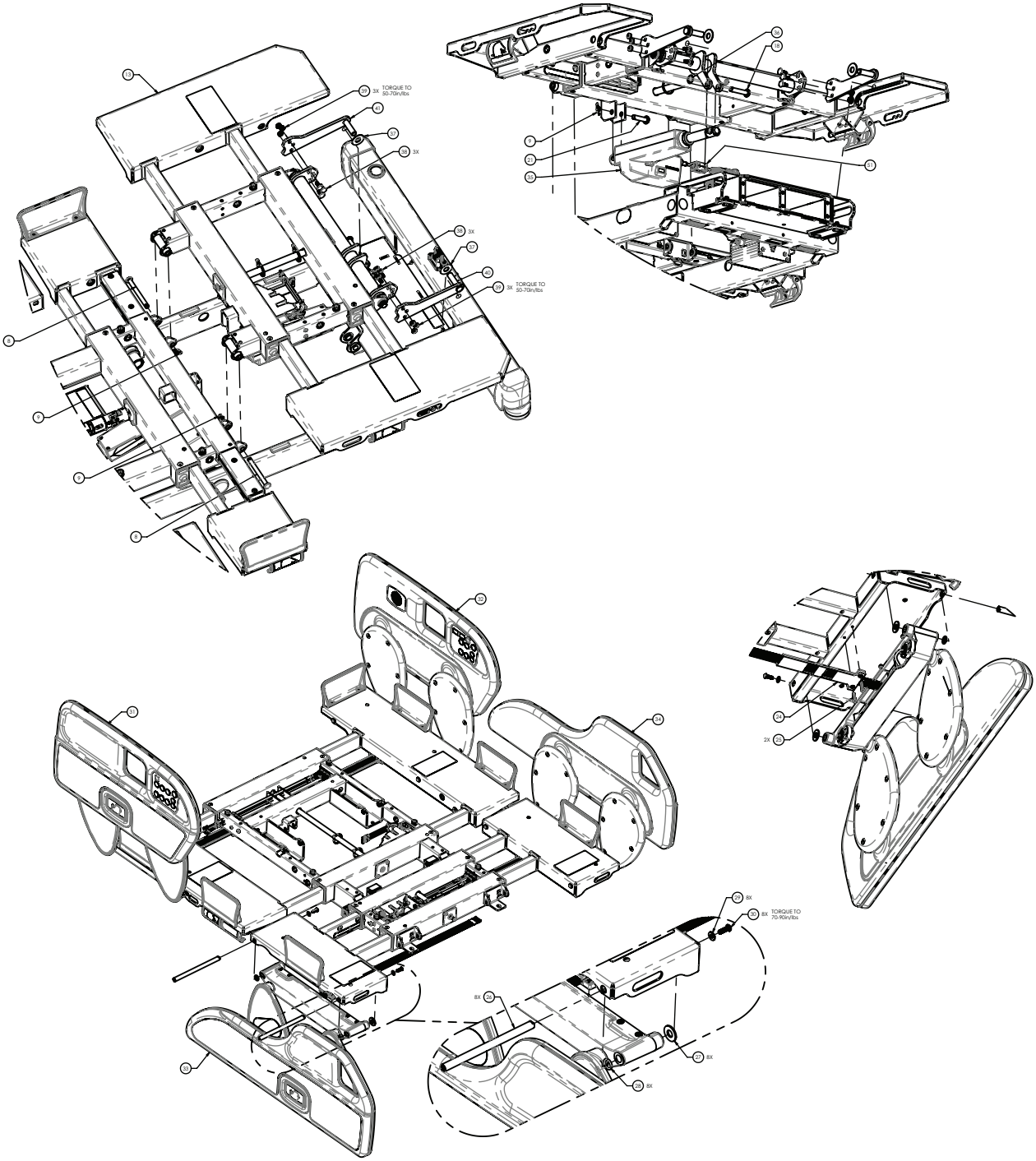
TORQUE TO 50-70in/lbs
3X
TORQUE TO 50-70in/lbs
2X
8X
8X
TORQUE TO 70-90in/lbs
8X
8X
8X

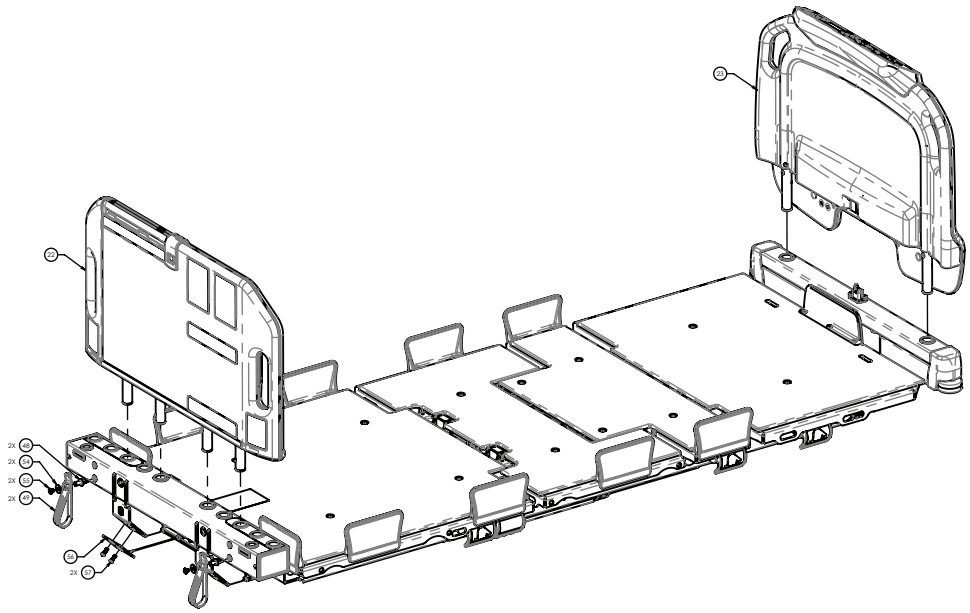

Item	Number	Name	Quantity
1	5900200174	*Hi-low frame assembly* (page 85)	1
2	5900340082	Shoulder screw	2
3	5900600073	Slide block, fowler & vascular	2
4	0011-003-000	Washer	4
5	0012-020-000	Washer	4
6	5900340106	Hex head screw	2
7	5900340107	Hex head screw	2
8	5900350036	Clevis pin	4
9	0027-022-000	Rue ring	11
10	5900200041	*Deck assembly, seat section* (page 142)	1
11	5900200055	*Deck assembly, head section* (page 128)	1
12	5900200056	*Deck assembly, knee section* (page 153)	1
13	5900200057	*Deck assembly, foot section* (page 159)	1
14	0008-031-000	Shoulder screw	2
15	0016-036-000	Nylok nut	2
16	5900350049	Clevis pin	2
17	5900200137	*Fowler regression link assembly - 5900200137* (page 102)	1
18	5900350035	Clevis pin	2
19	5900350044	Clevis pin	1
20	5900200157	*Head with CPR release actuator assembly - 5900200157* (page 140)	1
21	5900350046	Clevis pin	3
22	5900200026	*Expandable headboard assembly - 5900200026* (page 194)	1
23	5900200025	*Footboard assembly - 5900200025* (page 191)	1
24	5900200158	*Expandable deck wire guide assembly - 5900200158* (page 170)	4
25	5900340055	Pan head Torx screw	8
26	5900500022	Pin, rail arm bracket slide	8
27	5900320016	Washer	8
28	5900370042	O-ring	8

Item	Number	Name	Quantity
29	5900320028	Washer	8
30	0004-592-000	Button head Torx screw	8
31	5900200130	*Rail assembly, head* (page 172), right	1
32	5900200131	*Rail assembly, head* (page 172), left	1
33	5900200132	*Rail assembly, foot* (page 182), right	1
34	5900200133	*Rail assembly, foot* (page 182), left	1
35	5900420011	Actuator, foot	1
36	5900370106	Cotter pin	1
37	5900320029	Washer	2
38	0005-017-000	Carriage bolt	6
39	0016-102-000	Nylock hex nut	6
40	5900240108	Gatch arm weldment, foot bail, patient right	1
41	5900240109	Gatch arm weldment, foot bail, patient left	1
42	0026-012-000	Spring pin	2
43	5900200138	U-joint, sliding expandable deck	1
44	5900430143	Harness, GND braid D	1
45	5900340079	Hex washer head screw	2
46	5900420012	Actuator, knee	1
47	5900350047	Lock ring	4
48	5900500178	Cord strap post	2
49	8001-000-171	Strap, cord/hose management	2
50	5900520247	Ground strap clip	2
51	5900410059	Ferrite cable	4
53	3000-300-113	Cable tie	10
54	5900320031	Washer	2
55	5900340101	Round head screw	2
56	5900540283	Docker strain relief plate	1
57	5900340090	Pan screw	2

Fowler regression link assembly - 5900200137

Rev D (Reference only)

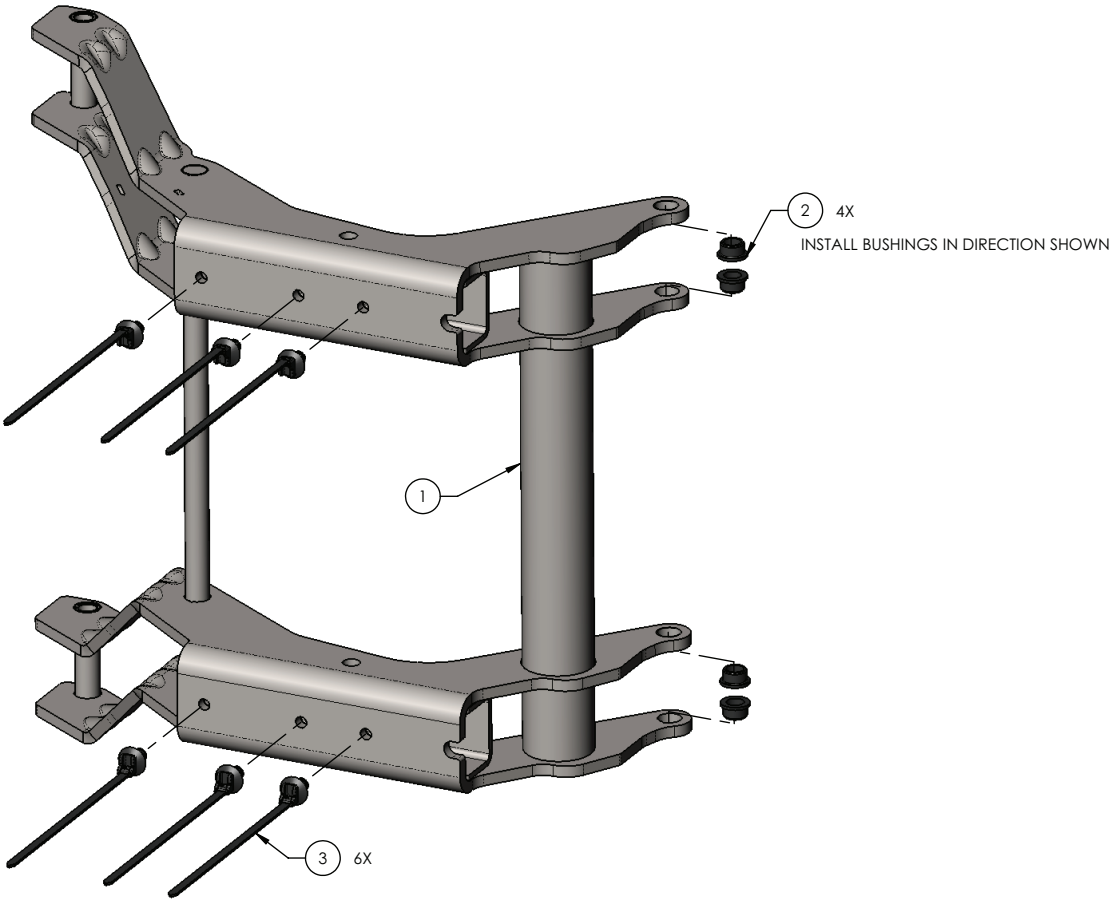

Item	Number	Name	Quantity
1	5900240121	Weldment, Fowler support	1
2	5900330003	Bushing, flg 0.375x0.500x0.313lg (flg 0.625x0.062)	4
3	5900350041	Cable tie, fir tree mount 1mm-35mm bundle blk	6

Upper frame assembly

5900200120 Rev E (Reference only)

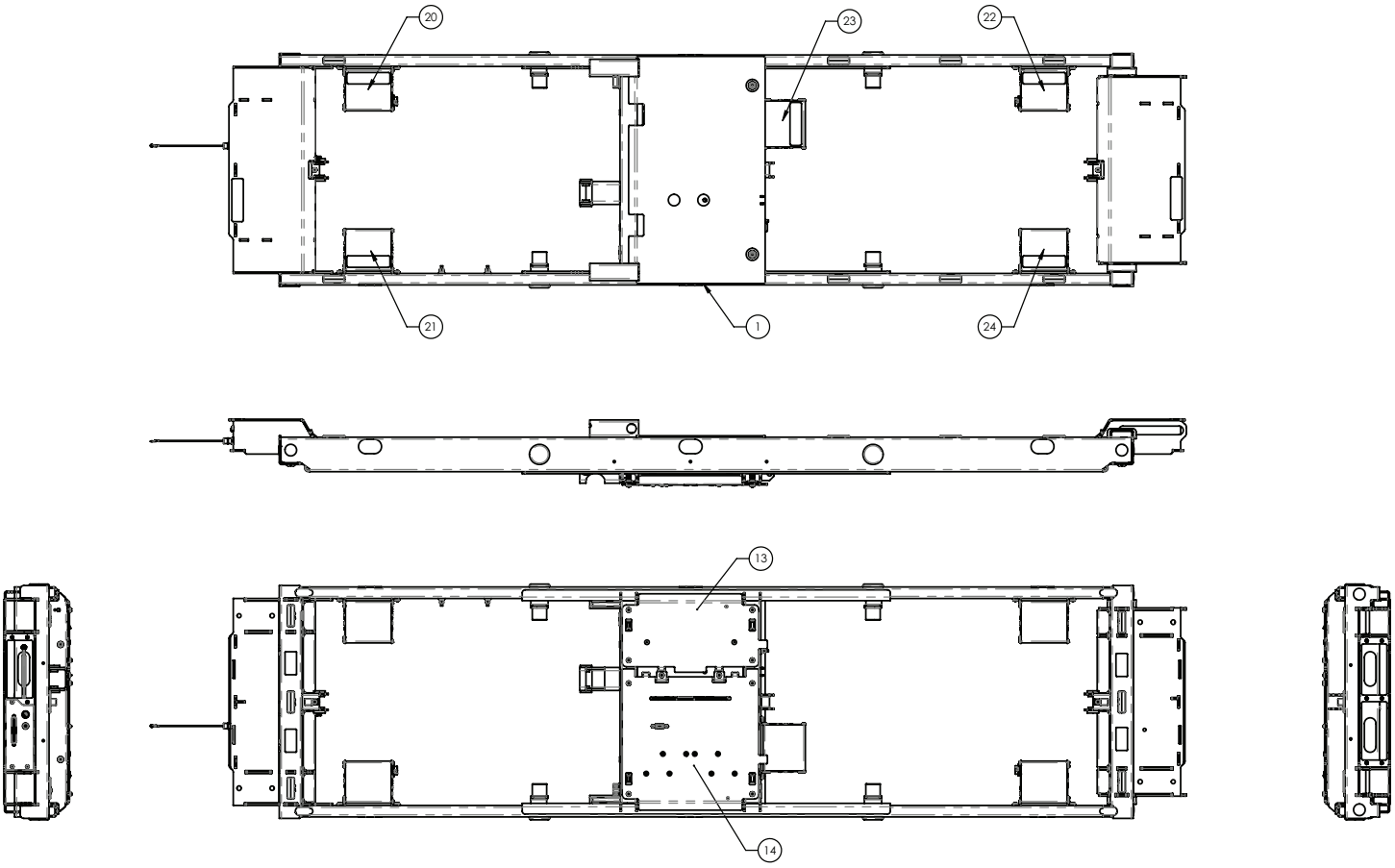

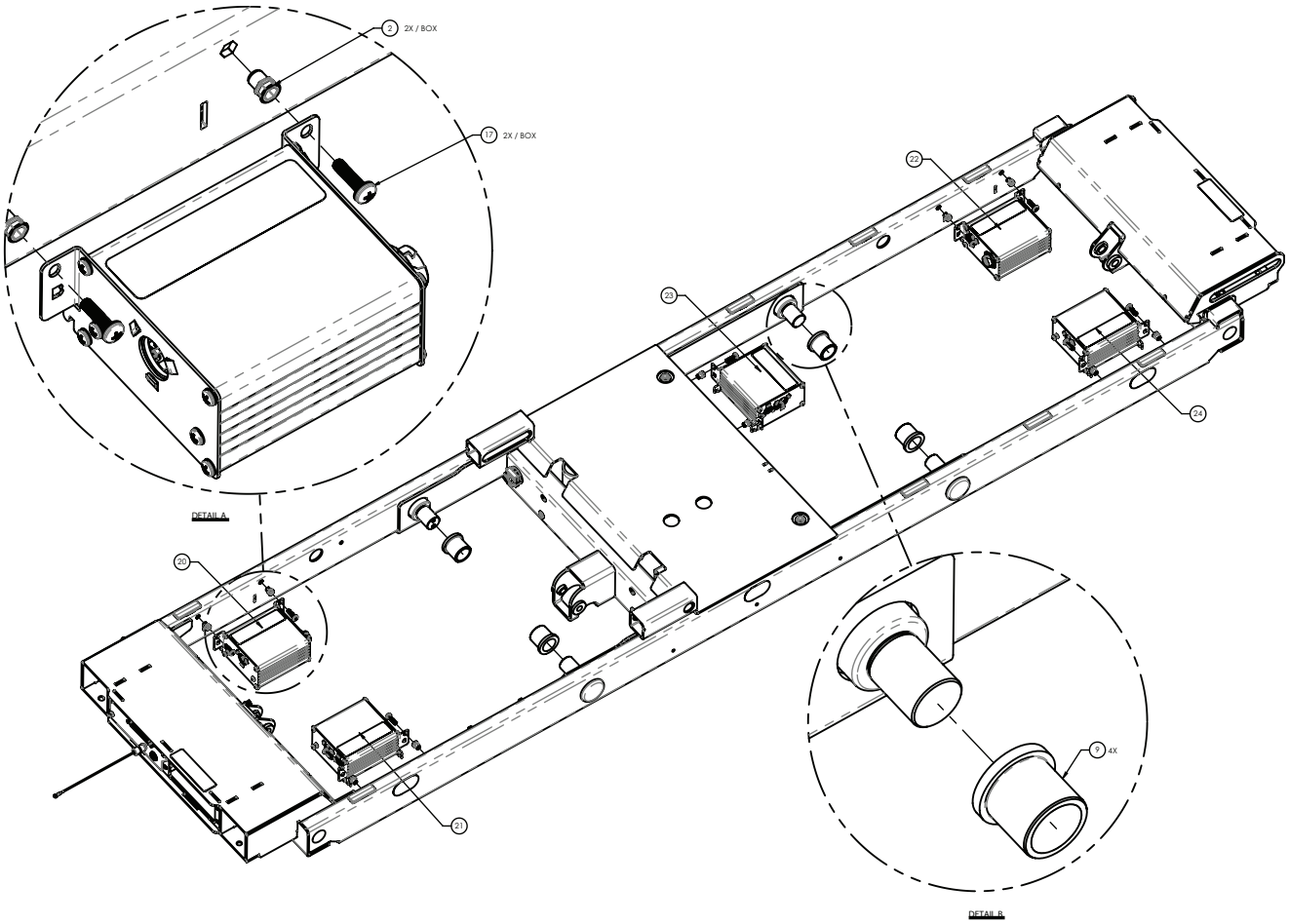
2 2X / BOX
17 2X / BOX
22
23
24
DETAIL A
20
21
9 4X
DETAIL B

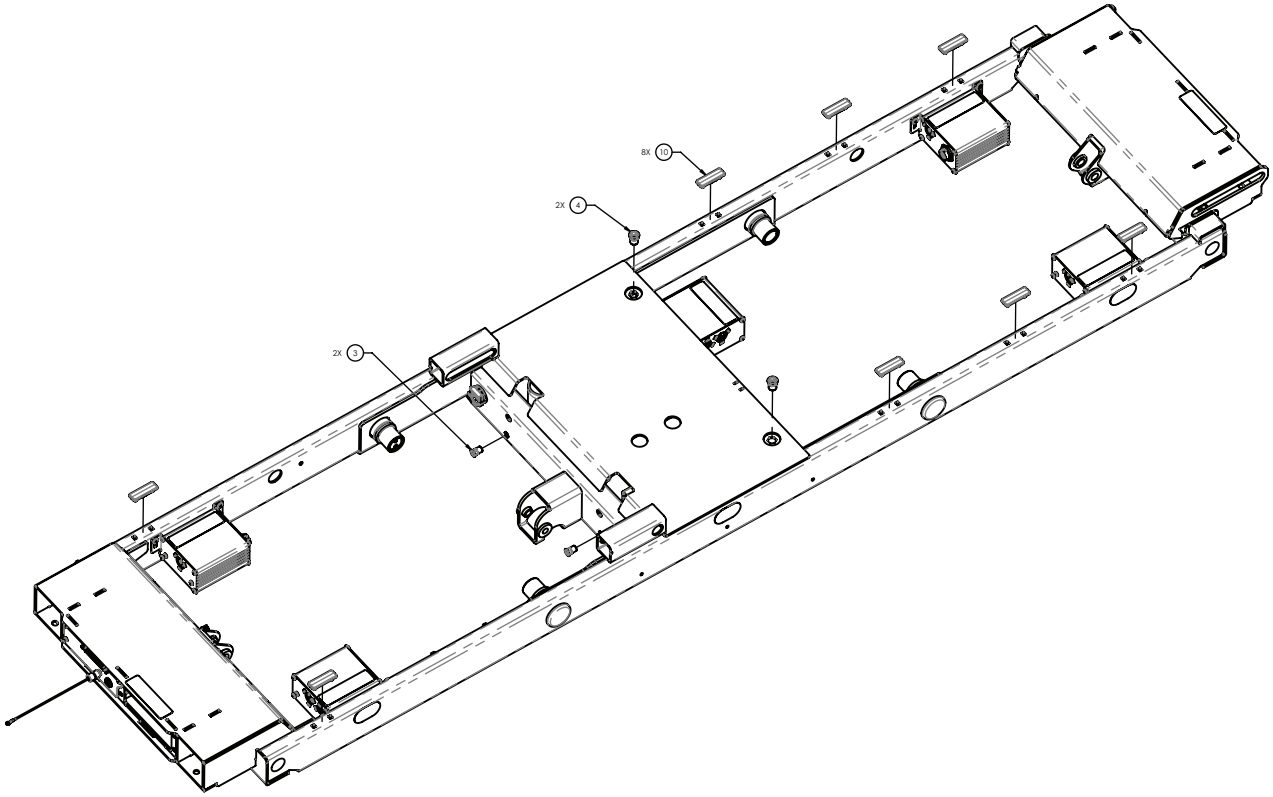
8X 10
2X 4
2X 3

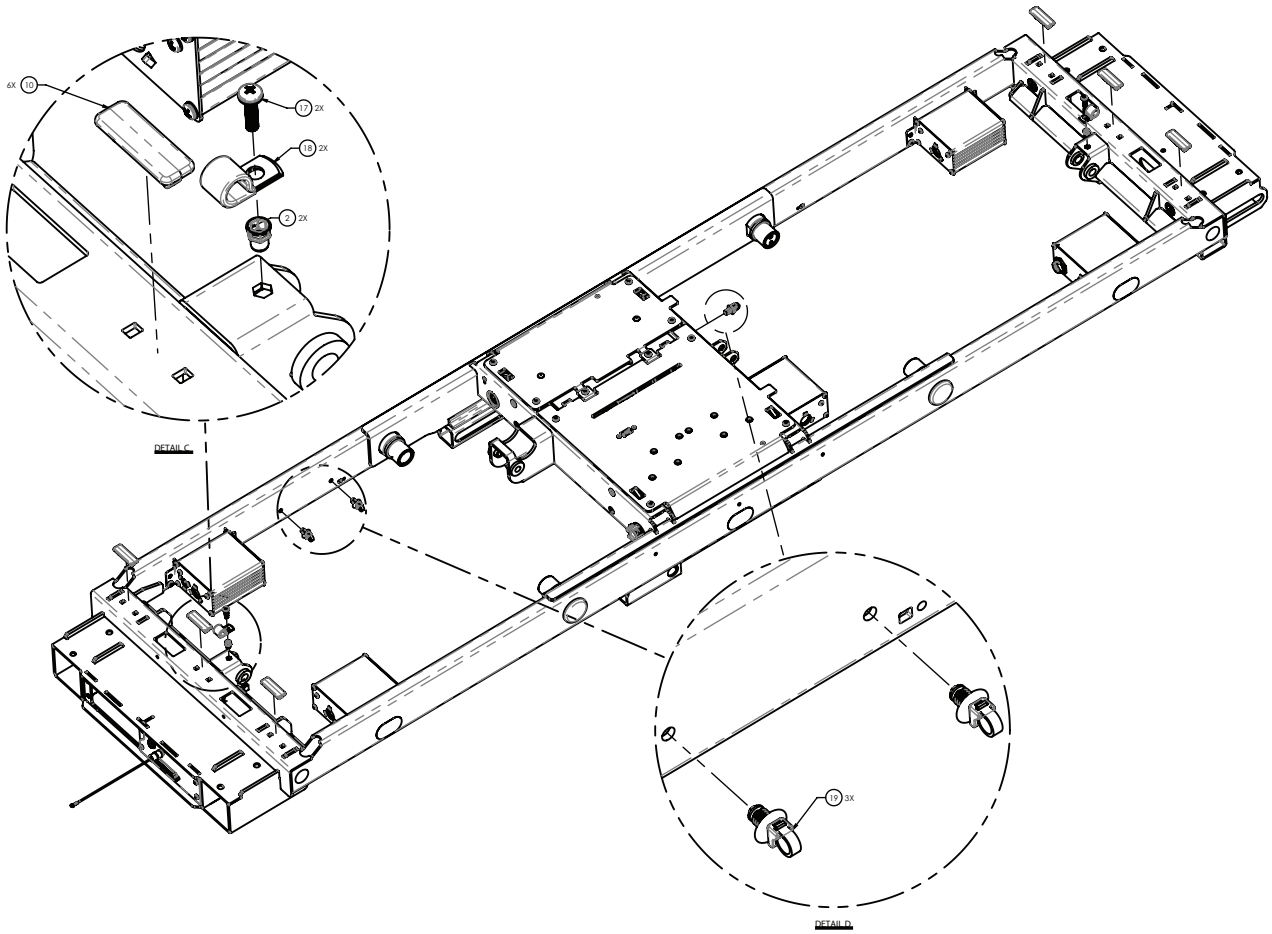
6X 10
17 2X
18 2X
2 2X
DETAIL C
19 3X
DETAIL D

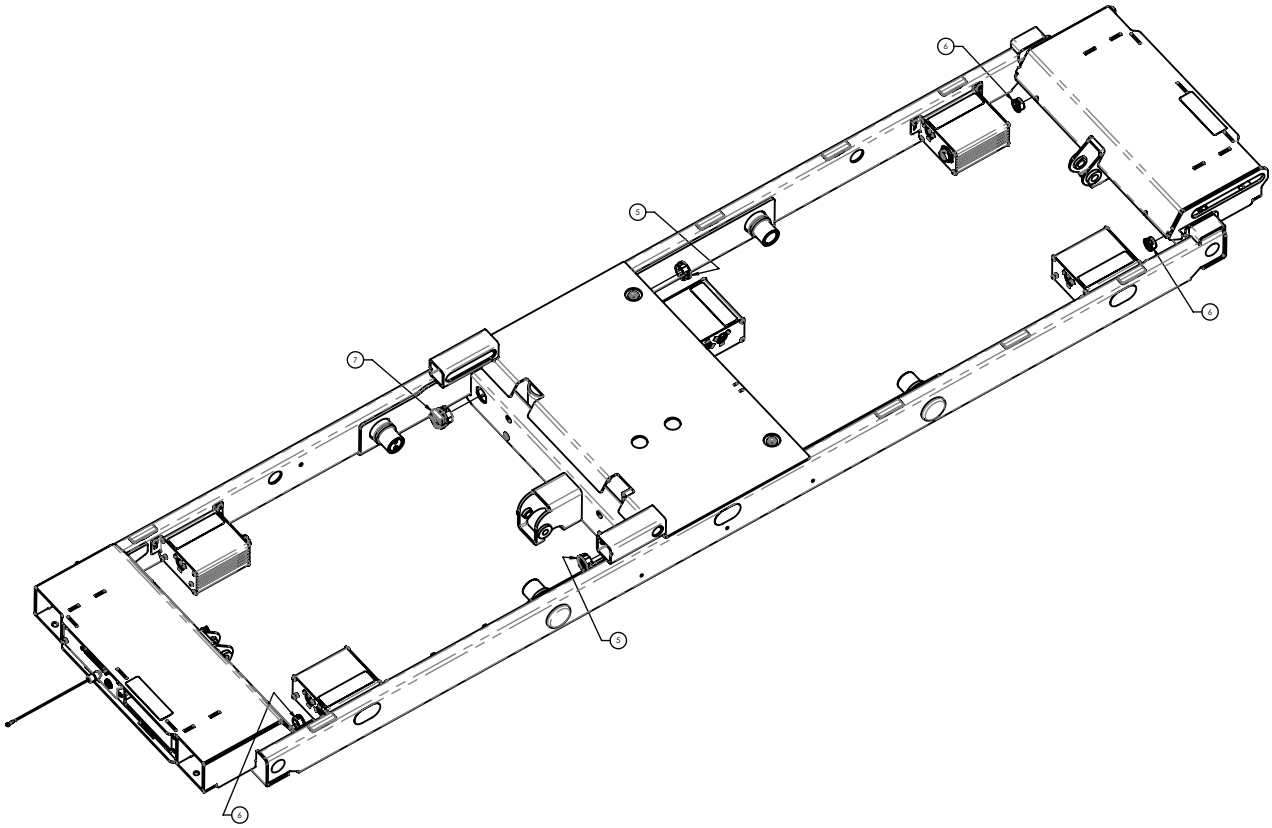
4
5
6
7
5
4

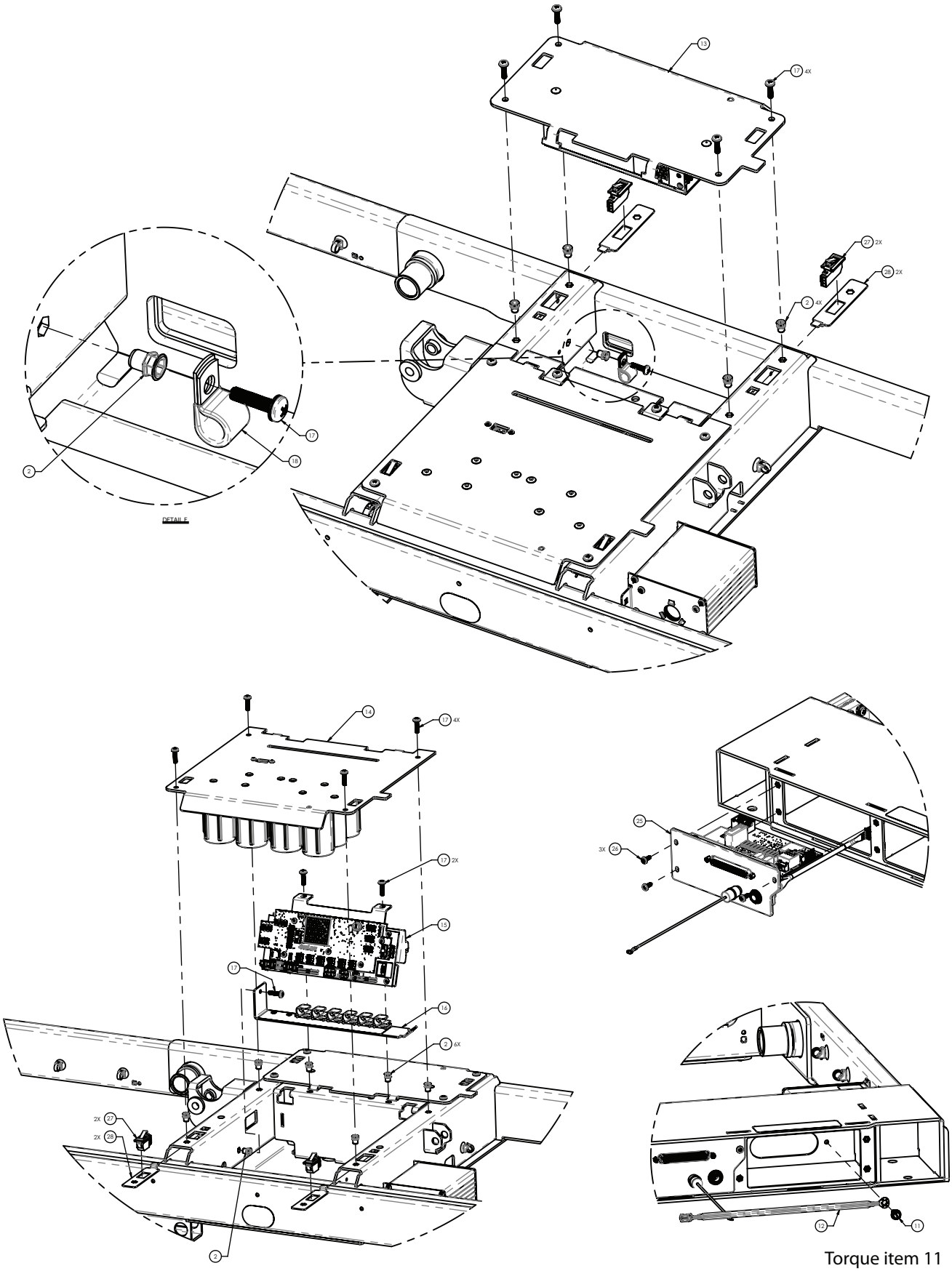

Torque item 11
to 50-70 in-lb

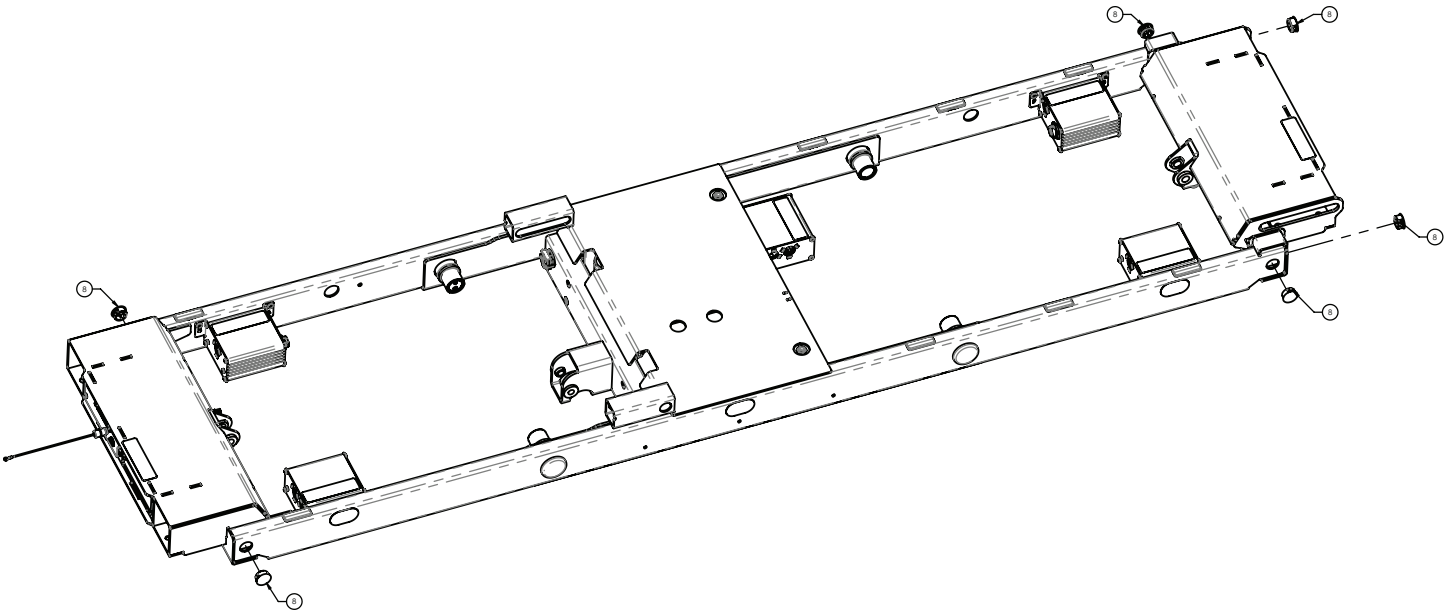

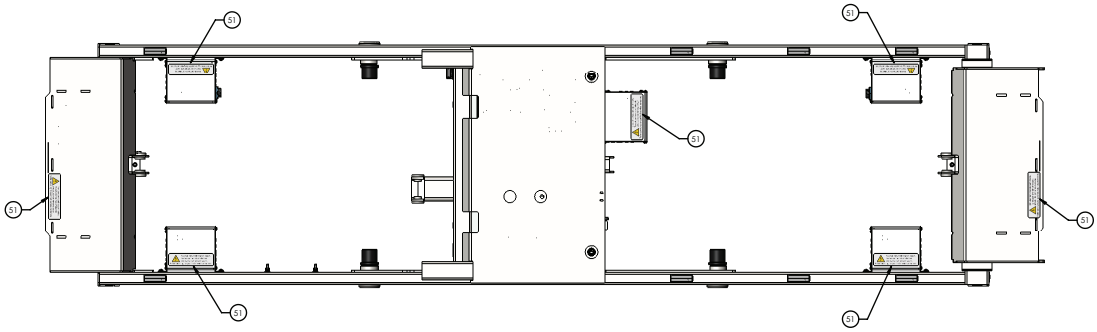

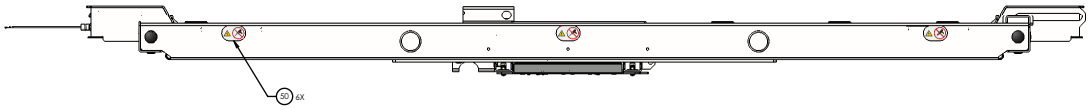

Item	Number	Name	Quantity
1	5900240094	Upper frame weldment	1
2	5900310020	Nutsert, #10-UNF thick sheet hex body-zinc	25
3	5900310007	Nutsert, 1/4-UNC hex body	2
4	5900310025	Nutsert, 5/16-UNC hex body	2
5	5900370023	Grommet, push-in split expandable 1” hole	2
6	5900370075	Grommet, push-in locking 3/4”	3
7	5900350051	Strain relief, snap-in ratcheting Ø0.12-0.75	1
8	5900370037	Plug, push-in round plastic 7/8”	6
9	5900330021	Bushing, flg 1.000X1.250X1.250LG (flg 1.500X0.188)	4
10	5900600067	Bumper pad, snap-in hard stop	14
11	5900340079	Screw, #10-32 x 1/2LG hex washer head elec ground	1
12	5900430112	HRNS, gnd braid C	1
13	5900280026	Electrical assembly, AC power	1
14	5900280025	Electrical assembly, DC power	1
15	5900280051	Electrical assembly, main power/control	1

Item	Number	Name	Quantity
16	5900200164	ASM, HRNS support span	1
17	5900340090	Screw, sems pan PH #10-32UNF x 3/4LG int wash zinc	25
18	0034-020-000	P-clamp, 3/8” insulated	3
19	5900350041	Cable tie, fir tree mount 1mm-35mm bundle blk	3
20	5900280042	*IOM ACB-EHA head lift electrical assembly* (page 122)	1
21	5900280044	*IOM ACB-head deck electrical assembly* (page 124)	1
22	5900280043	*IOM ACB-EHA foot lift electrical assembly* (page 123)	1
23	5900280045	*IOM ACB-knee deck electrical assembly* (page 125)	1
24	5900280046	*IOM ACB-foot deck electrical assembly* (page 126)	1
25	5900280033	*DB37 electrical assembly - 5900280033* (page 121)	1
26	5900340071	Screw, sems pan ph #6-32X3/8LG int wash zinc PL	3
27	5900410030	Switch, SPDT-N/O-N/C omron D3D-211	4
28	5900520237	Bracket, obstruction sensor switch plate	4
29	5900410030	HRNS, PS output TDK XMS series	1
30	5900430152	HRNS, PS input TDK XMS series	1
31	5900430115	HRNS, AC supply aux	1
32	5900430122	HRNS, primary act pwr-comm A	1
33	5900430155	HRNS, primary act pwr-comm B	1
34	5900430123	HRNS, secondary act pwr-comm	2
35	5900430136	HRNS, act knee pwr-comm	1
36	5900430121	HRNS, NC-AV pwr comm	2
37	5900430135	HRNS, pwr-comm MCU to JCTN seat	1
38	5900430132	HRNS, pwr-comm MCU to JCTN	1
39	5900430142	HRNS, act knee-foot LA31	2
40	5900430124	HRNS, act feedback (long)	1
41	5900430159	HRNS, act feedback	1
42	5900430140	HRNS, act head LA34	1
43	5900430141	HRNS, act head CPR	1
44	5900430131	HRNS, NC-SPKR PSI to JCTN	1
45	5900430134	HRNS, scale pwr-comm	1
46	5900430137	HRNS, brake-steer detect	1
47	5900430130	HRNS, underbed obstruction (short)	3
48	5900430129	HRNS, underbed obstruction (long)	1
49	5900430157	HRNS, DPM patch cable	1
50	5900180108	Label, no drilling	6
51	5900180098	Label, electrical shock warning	7

HRNS support span assembly

5900200164 Rev B (Reference only)

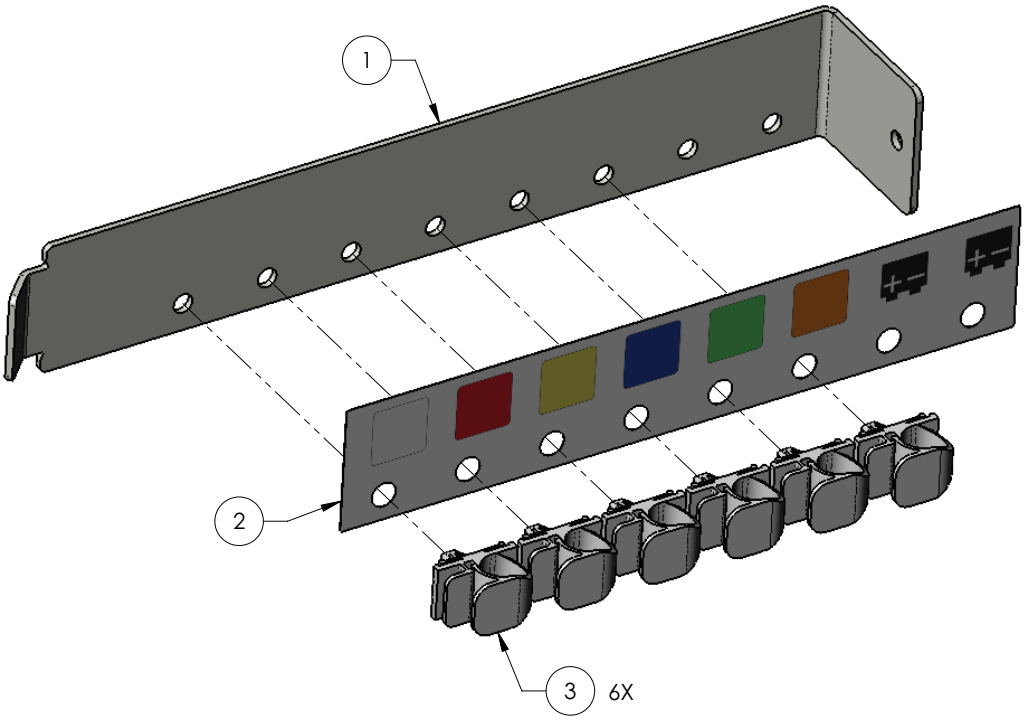

Item	Number	Name	Quantity
1	5900520236P	Bracket, HRNS support span S1 plated	1
2	5900690091	Label, DC harness position indicator	1
3	5900350052	Clip, latching push-barb mount Ø.38”	6

AC inlet 120V electrical assembly - 5900280029

Rev C (Reference only)

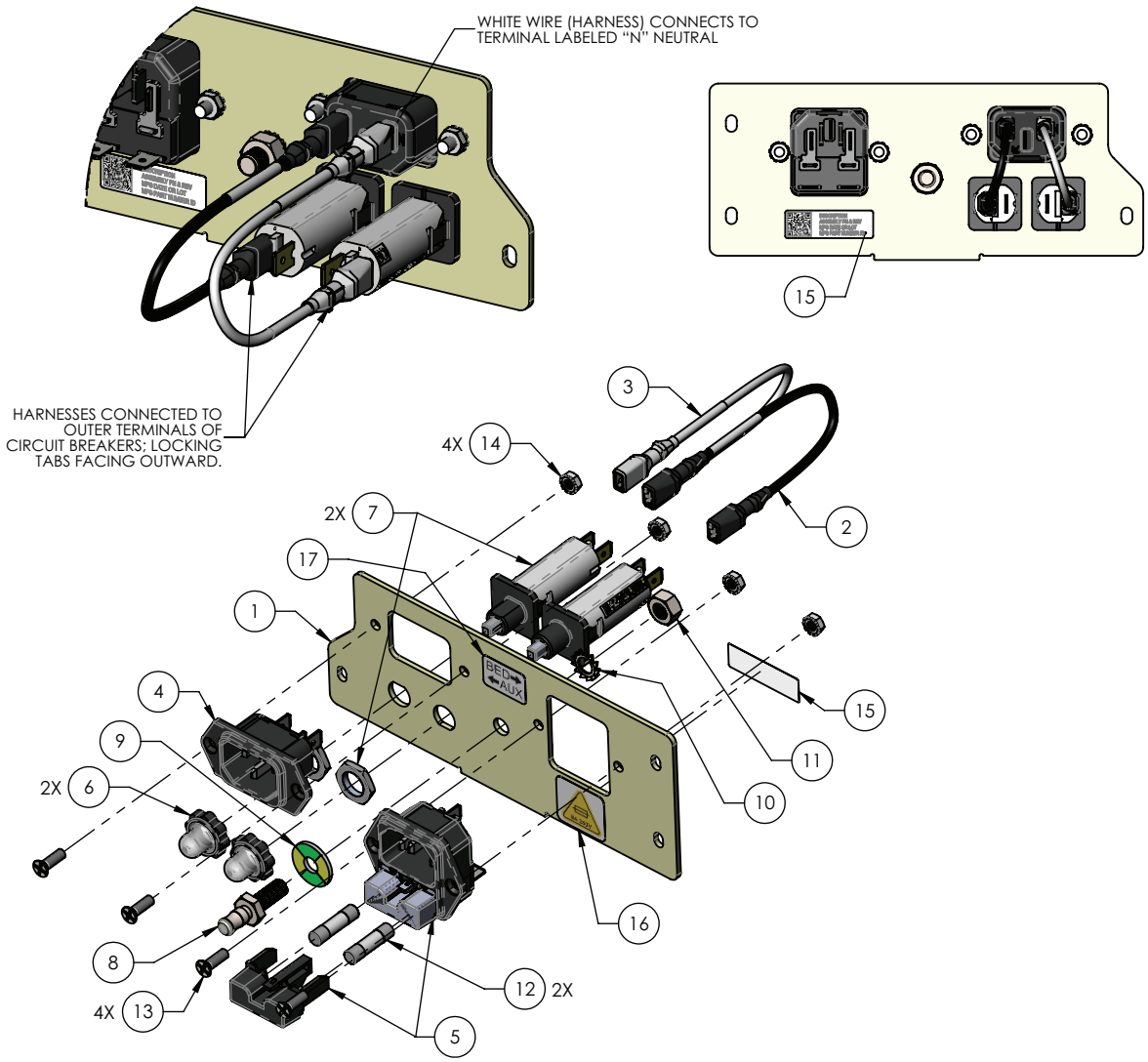

Item	Number	Name	Quantity
1	5900540280	Faceplate, IEC320 inlet ZnPl yellow	1
2	5900430110	HRNS, AC jumper line hot	1
3	5900430111	HRNS, AC jumper line neu	1
4	Reference only	Inlet, IEC 320-C14 15A 250V wo/fuse	1
5	Reference only	Inlet, IEC 320-C14 10A 250V w/fuse	1
6	Reference only	Cover, circuit breaker T9-311	2
7	Reference only	Circuit breaker, therm 6A 240V	2
8	Reference only	Equipotential connecting pin POAG-S6/15	1
9	Reference only	Equipotential color coded washer FR-POAG-S	1
10	Reference only	Equipotential serrated lock washer F/M6	1
11	Reference only	Equipotential nut MU0, 8D/M6	1

Item	Number	Name	Quantity
12	Reference only	Fuse, cartridge 215 series 5x20mm slow 8A 250V	2
13	Reference only	Screw, flat ph #6-32x7/16” ZnPl ASME B18.6.3	4
14	Reference only	Nut, hex keps #6-32x1/4” ext lock Gr2 ZnPl	4
15	Reference only	Label, ID generic serial & QR code	1
16	5900180119	Label, 8A 250V fuse	1
17	5900180121	Label, IEC identification	1

Auxiliary outlet 120V electrical assembly

5900280031 Rev D (Reference only)

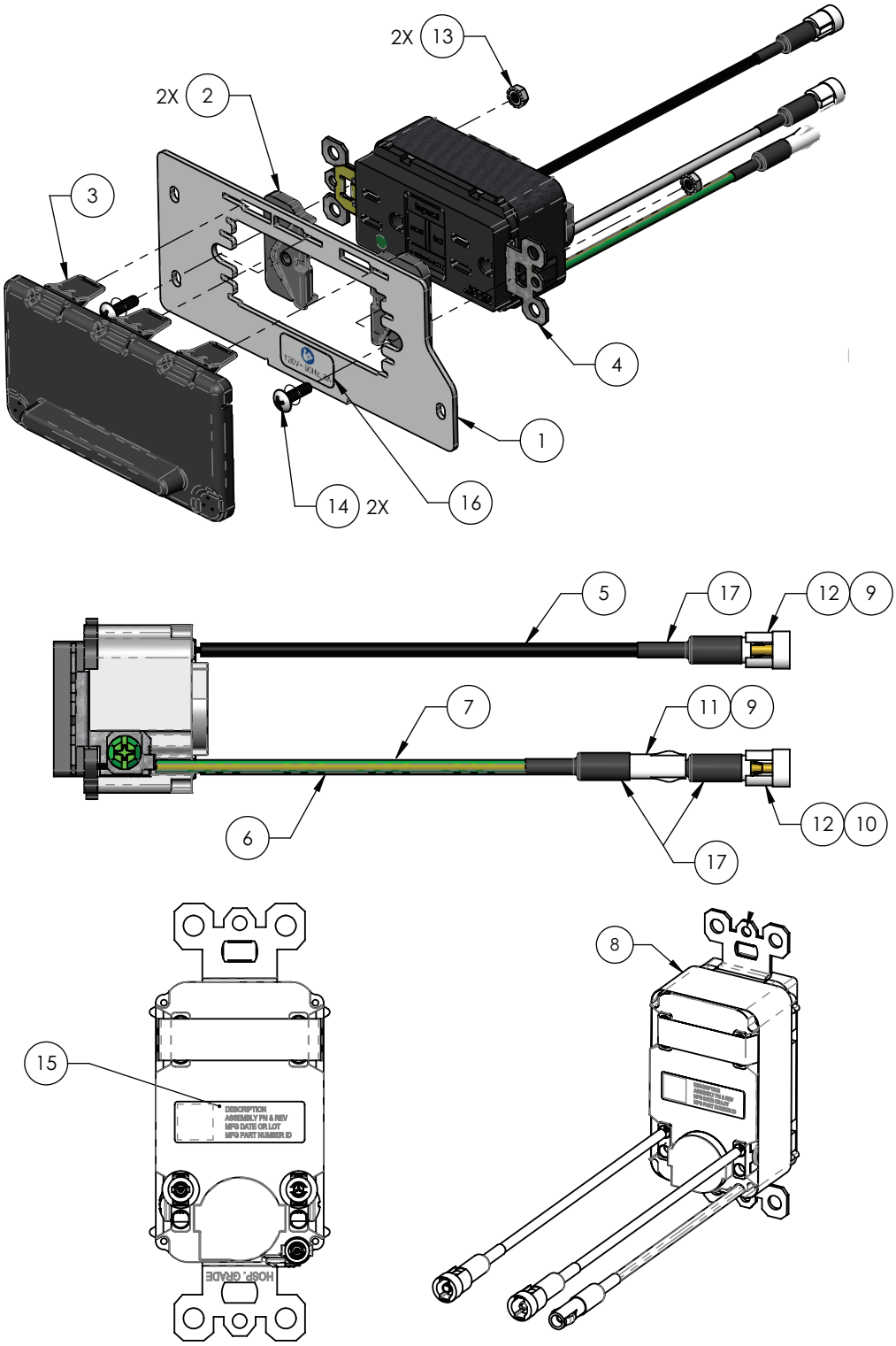

Item	Number	Name	Quantity
1	5900540222	Faceplate, aux outlet 120V	1
2	5900600078	Clip, aux outlet isolate	2
3	5900600069	Cover, NEMA aux outlet cover TPV w/magnets	1
4	Reference only	Outlet, NEMA 5-15R 15A/125V hg tr GFCI	1
5	Reference only	Wire, hook-up strnd 14AWG blk UL1015	
6	Reference only	Wire, hook-up strnd 14AWG wht UL1015	
7	Reference only	Wire, hook-up strnd 14AWG grn-yel UL1015	
8	Reference only	Tape, UL510 flame-retardant	
9	Reference only	Conn, std .093 crimp term 42477 fem 14-18AWG	2
10	Reference only	Conn, std .093 crimp term 42478 male 14-18AWG	1
11	Reference only	Conn, 2.36mm std .093 pin & socket rec housing 1P	1
12	Reference only	Conn, 2.36mm std .093 pin & socket PL HSG 1P	2
13	Reference only	Nut, hex keps #6-32x1/4” ext lock Gr2 ZnPl	2
14	Reference only	Screw, xtra wide truss ph #6-32x1/2” 18-8 ss	2
15	Reference only	Label, ID generic serial & QR code	1
16	5900180095	Label, aux mains, 120V	1
17	Reference only	Heat shrink, dual-wall polyolefin 3:1 UL-CSA blk	

AC inlet 230V electrical assembly - 5900280030

Rev B (Reference only)

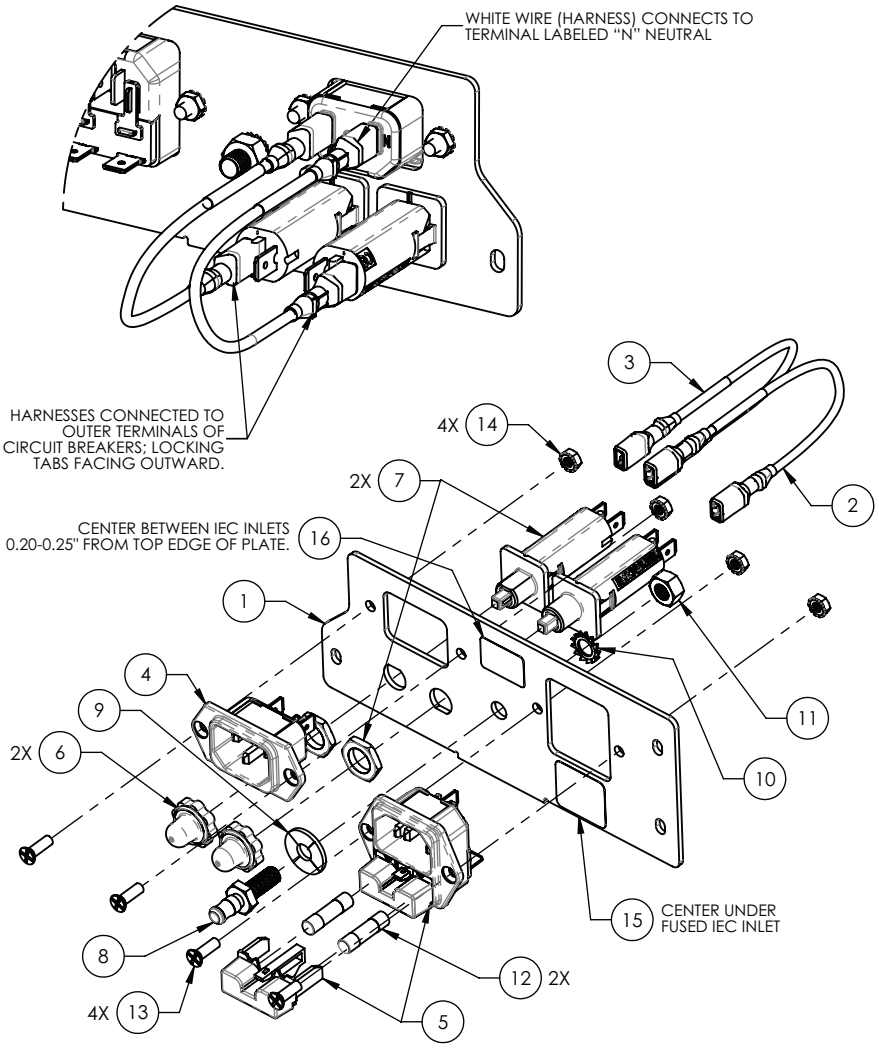

Item	Number	Name	Quantity
1	5900540221P	Faceplate, IEC320 inlet	1
2	5900430110	HRNS, AC jumper line hot	1
3	5900430111	HRNS, AC jumper line neu	1
4	Reference only	Inlet, IEC 320-C14 15A 250V wo/fuse	1
5	Reference only	Inlet, IEC 320-C14 10A 250V w/fuse	1
6	Reference only	Cover, circuit breaker T9-311	2
7	Reference only	Circuit breaker, therm 3A 240V	2
8	Reference only	Equipotential connecting pin	1
9	Reference only	Equipotential color coded washer	1
10	Reference only	Equipotential serrated lock washer	1
11	Reference only	Equipotential nut	1
12	Reference only	Fuse, cartridge 215 series 5x20mm slow 4A 250V	2
13	Reference only	Screw, flat ph #6-UNC x 0.4375	4
14	Reference only	Nut, hex kep #6-UNC x 0.25	4

Item	Number	Name	Quantity
15	5900180120	Label, 4A 250V fuse	1
16	5900180121	Label, IEC identification	1

Auxiliary outlet 230V electrical assembly AS/NZS

5900280048 Rev E (Reference only)

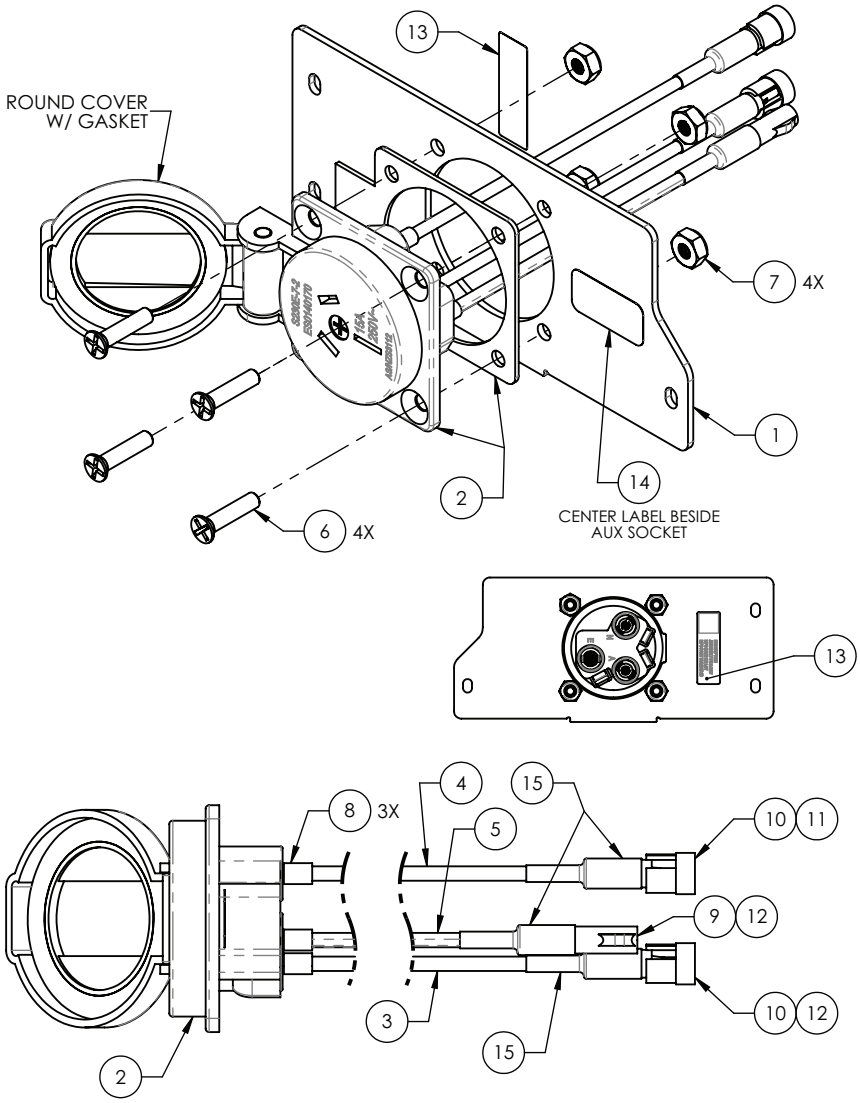

*NOT ALL COMPONENTS SHOWN FOR CLARITY

Item	Number	Name	Quantity
1	5900540274	Faceplate, aux outlet 230V	1
2	Reference only	Socket, panel	1
3	Reference only	Wire, hook-up	
4	Reference only	Wire, hook-up	
5	Reference only	Wire, hook-up	
6	Reference only	Pan head screw	4
7	Reference only	Nylock hex nut	4
8	Reference only	Connector	3
9	Reference only	Connector	1
10	Reference only	Connector	2
11	Reference only	Connector	1
12	Reference only	Connector	2

Item	Number	Name	Quantity
13	Reference only	Label, ID generic serial & QR code	1
14	5900180096	Label, aux mains, 230V	1
15	Reference only	Heat shrink	

Auxiliary outlet 230V electrical assembly UK/IRE

5900280049 Rev E (Reference only)

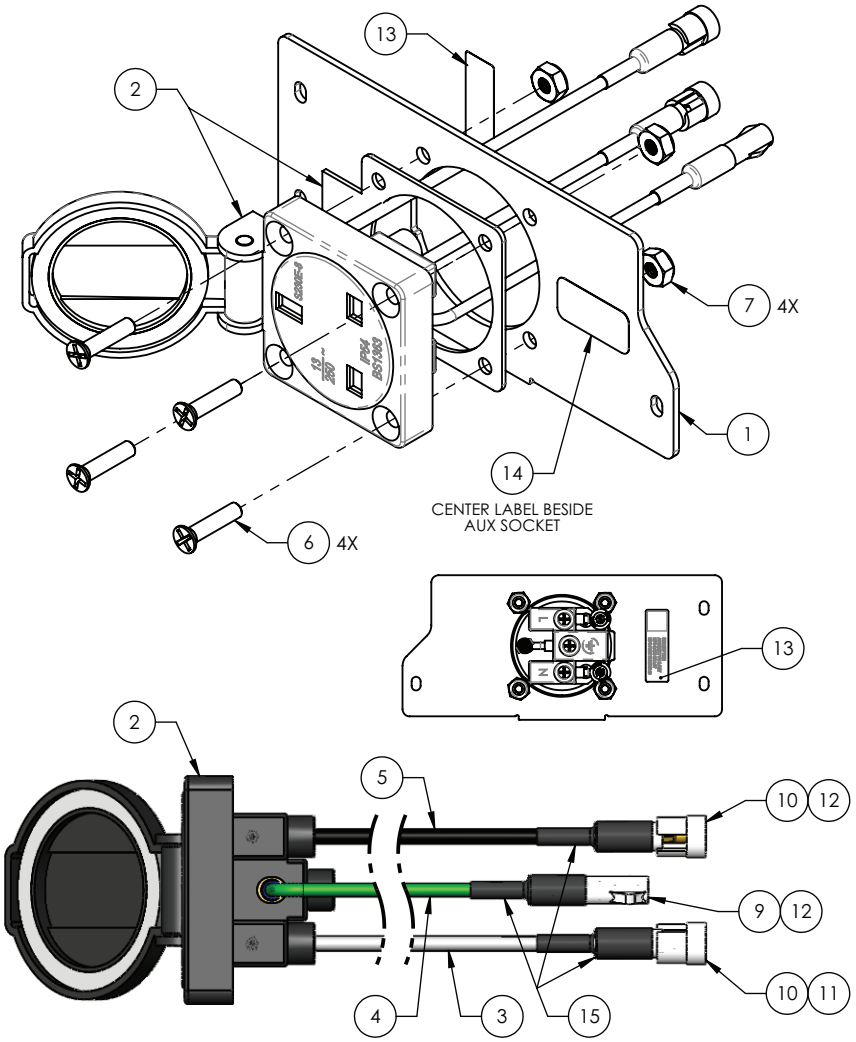

*NOT ALL COMPONENTS SHOWN FOR CLARITY

Item	Number	Name	Quantity
1	5900540274	Faceplate, aux outlet 230V	1
2	Reference only	Socket, panel UK BS 13A 250V~IP54	1
4	Reference only	Wire, hook-up strnd 14AWG wht UL1015	
5	Reference only	Wire, hook-up strnd 14AWG grn-yel UL1015	
3	Reference only	Wire, hook-up strnd 14AWG blk UL1015	
6	Reference only	Screw, flat ph #8-32x3/4” ZnPl ASME B18.6.3	4
7	Reference only	Nut, thin hex nylock #8-32x11/64” UNC ZnPl GR2	4
8	Reference only	Conn, Ferrule insul 14AWG 12mm LG barrell BLU ULr	3
9	Reference only	Conn, 2.36mm std .093 pin & socket rec housing 1P	1
10	Reference only	Conn, 2.36mm std .093 pin & socket PL HSG 1P	2
11	Reference only	Conn, std .093 crimp term 42478 male 14-18AWG	1
12	Reference only	Conn, std .093 crimp term 42477 fem 14-18AWG	2
13	Reference only	Label, ID generic serial & QR code	1

Item	Number	Name	Quantity
14	5900180096	Label, aux mains, 230V	1
15	Reference only	Heat shrink, dual-wall polyolefin 3:1 UL-CSA blk	

Auxiliary outlet 220-240V electrical assembly (SA/ME)

5900280050 Rev A (Reference only)

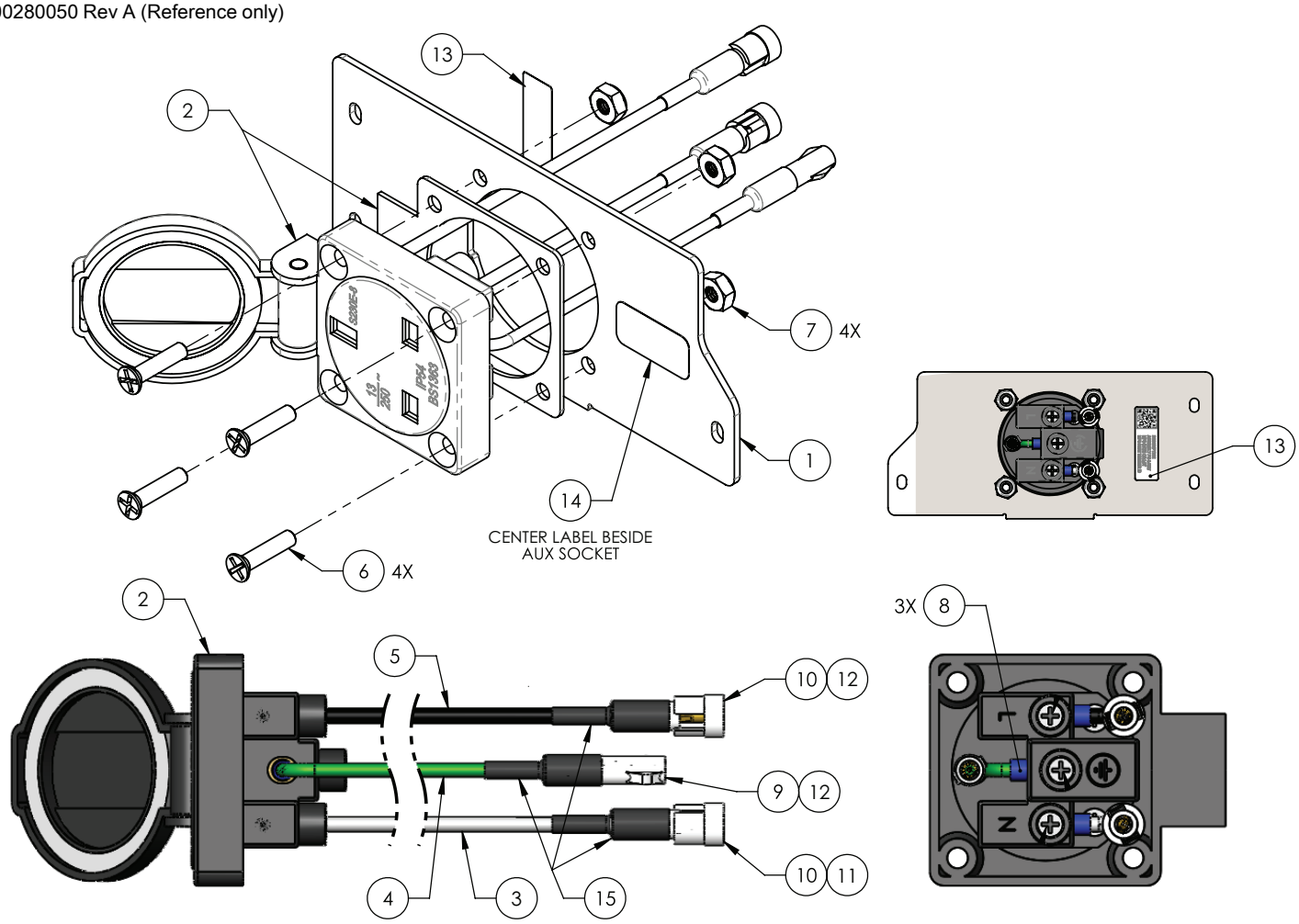

*NOT ALL COMPONENTS SHOWN FOR CLARITY

Item	Number	Name	Quantity
1	5900540274	Faceplate, aux outlet 230V	1
2	Reference only	Socket, panel UK BS 13A 250V~IP54	1
4	Reference only	Wire, hook-up strnd 14AWG wht UL1015	A/R
5	Reference only	Wire, hook-up strnd 14AWG grn-yel UL1015	A/R
3	Reference only	Wire, hook-up strnd 14AWG blk UL1015	A/R
6	Reference only	Screw, flat ph #8-32x3/4” ZnPl ASME B18.6.3	4
7	Reference only	Nut, thin hex nylock #8-32x11/64” UNC ZnPl GR2	4
8	Reference only	Conn, Ferrule ins 14AWG 12mm LG barrell BLU ULr	3
9	Reference only	Conn, 2.36mm std .093 pin & socket rec housing 1P	1
10	Reference only	Conn, 2.36mm std .093 pin & socket PL HSG 1P	2
11	Reference only	Conn, std .093 crimp term 42478 male 14-18AWG	1
12	Reference only	Conn, std .093 crimp term 42477 fem 14-18AWG	2
13	Reference only	Label, ID generic serial & QR code	1
14	5900180100	Label, aux mains, 220-240V	1
15	Reference only	Heat shrink, dual-wall polyolefin 3:1 UL-CSA blk	A/R

DB37 electrical assembly - 5900280033

Rev A (Reference only)

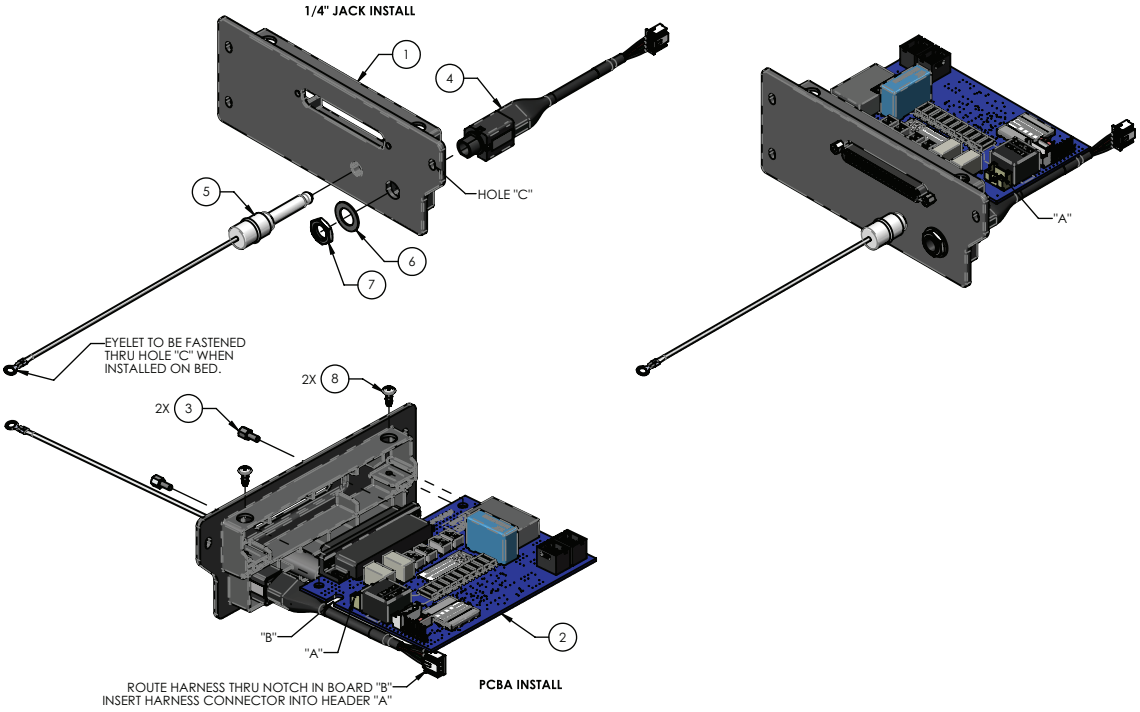

Item	Number	Name	Quantity
1	5900600079	Faceplace, DB37	1
2	5900400038	PCBA, IOM PSI	1
3	5900370103	Standoff, #4-40 x 0.250 m-f threaded	2
4	5900430148	HRNS, panel jack 1/4”	1
5	5900350048	1/4” dummy plug, plastic, white, 6” poly cord	1
6	5900320026	Washer, flat 3/8 x 0.625 x 0.025	1
7	5900310023	Nut, hex ms 3/8-unef	1
8	5900340008	Screw, pan ph #6-unc x 0.313 hi-lo	2

IOM ACB-EHA head lift electrical assembly

5900280042 Rev A (Reference only)

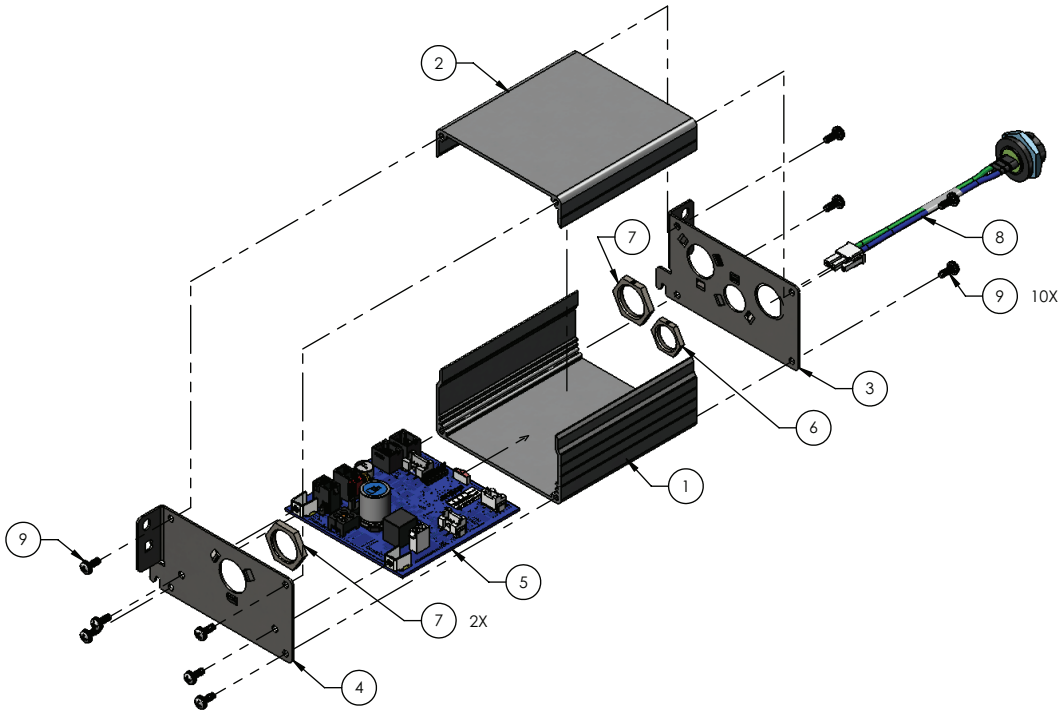

Item	Number	Name	Quantity
1	5900580006	Box extrusion, IOM ACB elec base	1
2	5900580007	Box extrusion, IOM ACB elec lid	1
3	5900520238	Bracket, encl-IOM ACB end plate (A)	1
4	5900520239	Bracket, encl-IOM ACB end plate (B)	1
5	590040004401	PCBA, IOM ACB hi-lo head	1
6	5900410056	Locknut, skindicht sm-m m16x1.5	1
7	5900410057	Locknut, skindicht sm-m m20x1.5	2
8	5900430118	HRNS, act PCBA to pnl parker motor	1
9	5900340071	Screw, sems pan ph #6-32x3/8lg int wash zinc pl	10

IOM ACB-EHA foot lift electrical assembly

5900280043 Rev A (Reference only)

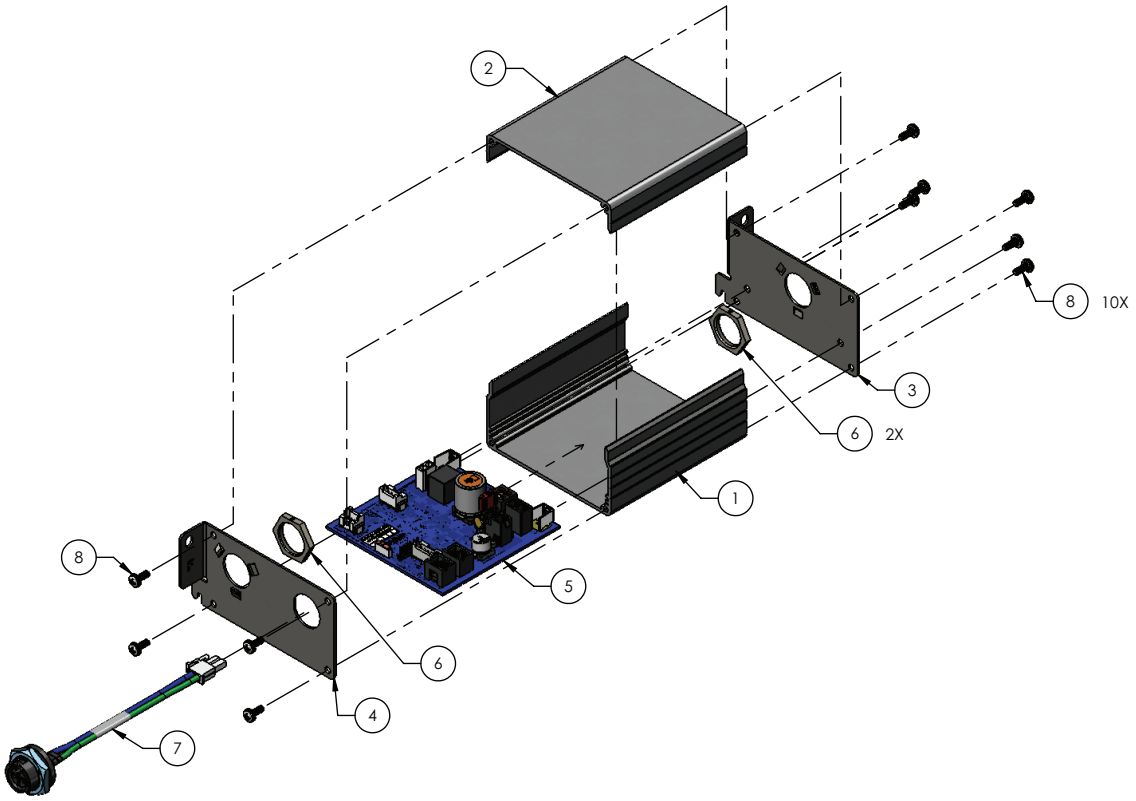

Item	Number	Name	Quantity
1	5900580006	Box extrusion, IOM ACB elec base	1
2	5900580007	Box extrusion, IOM ACB elec lid	1
3	5900520244	Bracket, encl-IOM ACB end plate (G)	1
4	5900520243	Bracket, encl-IOM ACB end plate (F)	1
5	590040004402	PCBA, IOM ACB hi-lo foot	1
7	5900410057	Locknut, skindicht sm-m m20x1.5	2
8	5900430118	HRNS, act PCBA to pnl parker motor	1
9	5900340071	Screw, sems pan ph #6-32x3/8lg int wash zinc pl	10

IOM ACB-head deck electrical assembly

5900280044 Rev A (Reference only)

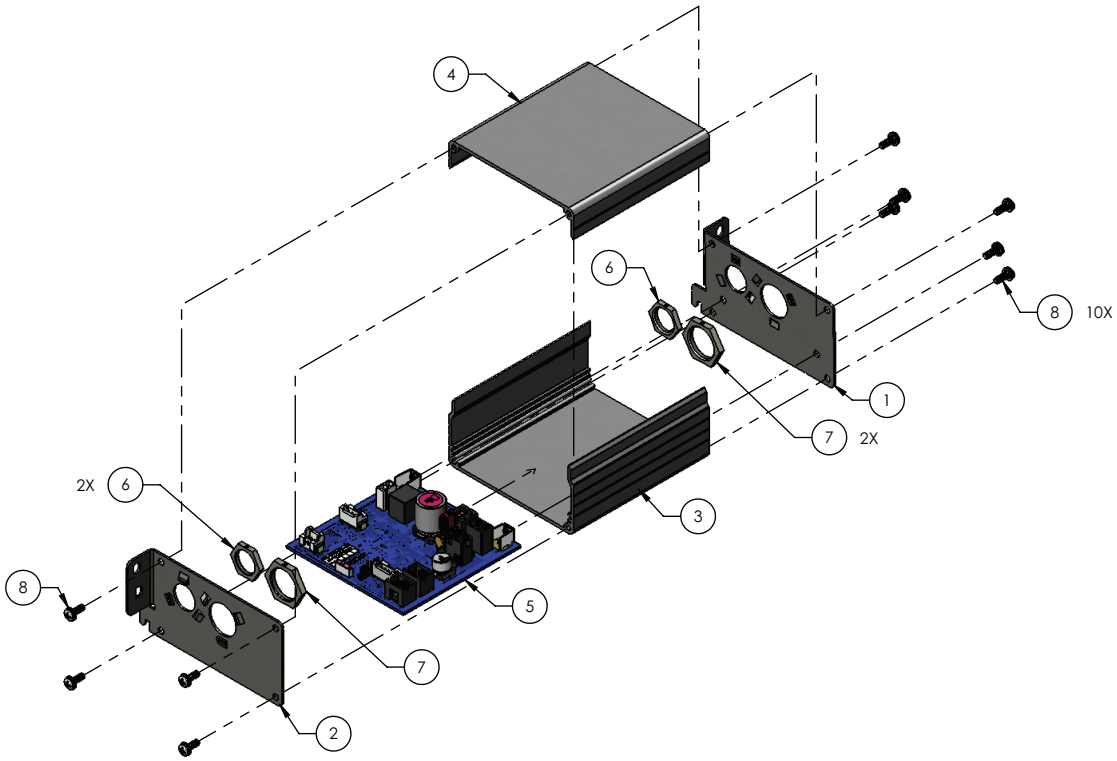

Item	Number	Name	Quantity
1	5900520240	Bracket, encl-IOM ACB end plate (C)	1
2	5900520241	Bracket, encl-IOM ACB end plate (D)	1
3	5900580006	Box extrusion, IOM ACB elec base	1
4	5900580007	Box extrusion, IOM ACB elec lid	1
5	590040004403	PCBA, IOM ACB head	1
6	5900410056	Locknut, skindicht sm-m m16x1.5	2
7	5900410057	Locknut, skindicht sm-m m20x1.5	2
8	5900340071	Screw, sems pan ph #6-32x3/8lg int wash zinc pl	10

IOM ACB-knee deck electrical assembly

5900280045 Rev A (Reference only)

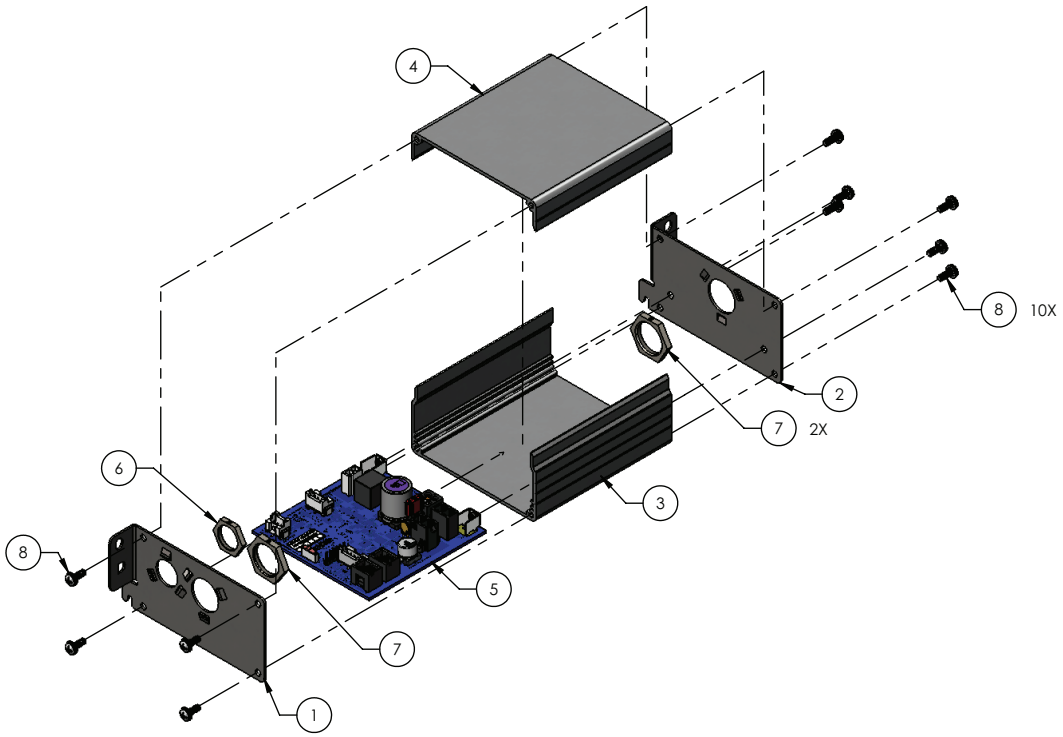

Item	Number	Name	Quantity
1	5900520241	Bracket, encl-IOM ACB end plate (D)	1
2	5900520242	Bracket, encl-IOM ACB end plate (E)	1
3	5900580006	Box extrusion, IOM ACB elec base	1
4	5900580007	Box extrusion, IOM ACB elec lid	1
5	590040004404	PCBA, IOM ACB knee	1
6	5900410056	Locknut, skindicht sm-m m16x1.5	2
7	5900410057	Locknut, skindicht sm-m m20x1.5	2
8	5900340071	Screw, sems pan ph #6-32x3/8lg int wash zinc pl	10

IOM ACB-foot deck electrical assembly

5900280046 Rev A (Reference only)

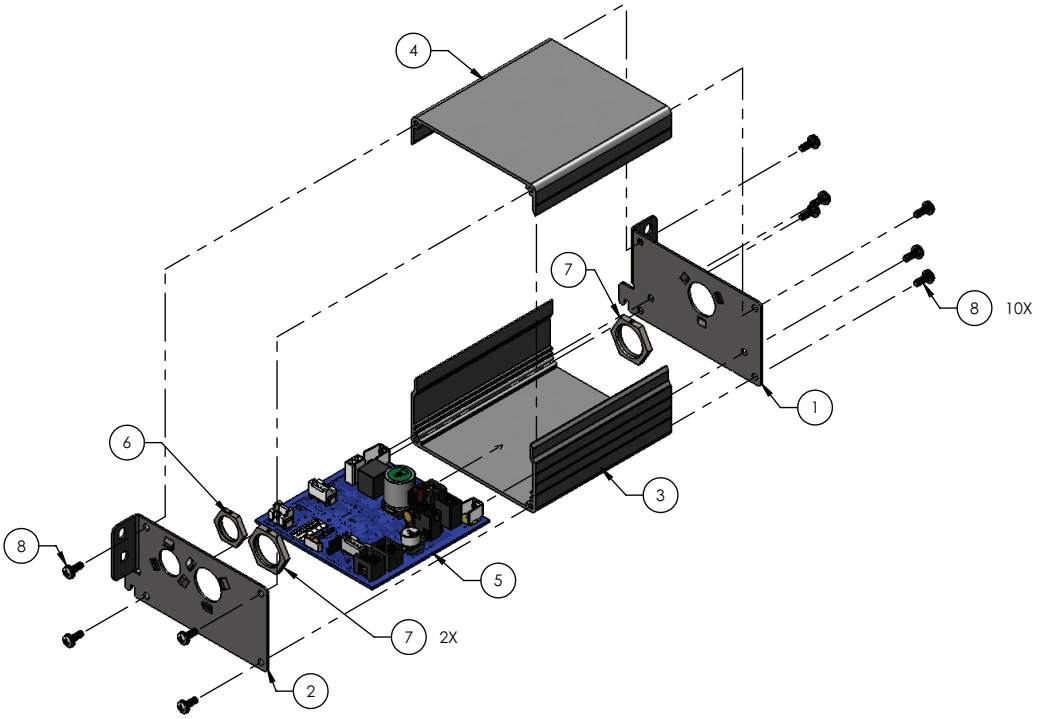

Item	Number	Name	Quantity
1	5900520244	Bracket, encl-IOM ACB end plate (G)	1
2	5900520241	Bracket, encl-IOM ACB end plate (D)	1
3	5900580006	Box extrusion, IOM ACB elec base	1
4	5900580007	Box extrusion, IOM ACB elec lid	1
5	590040004405	PCBA, IOM ACB foot	1
6	5900410056	Locknut, skindicht sm-m m16x1.5	2
7	5900410057	Locknut, skindicht sm-m m20x1.5	2
8	5900340071	Screw, sems pan ph #6-32x3/8lg int wash zinc pl	10

Main power/control electrical assembly - 5900280051

Rev C (Reference only)

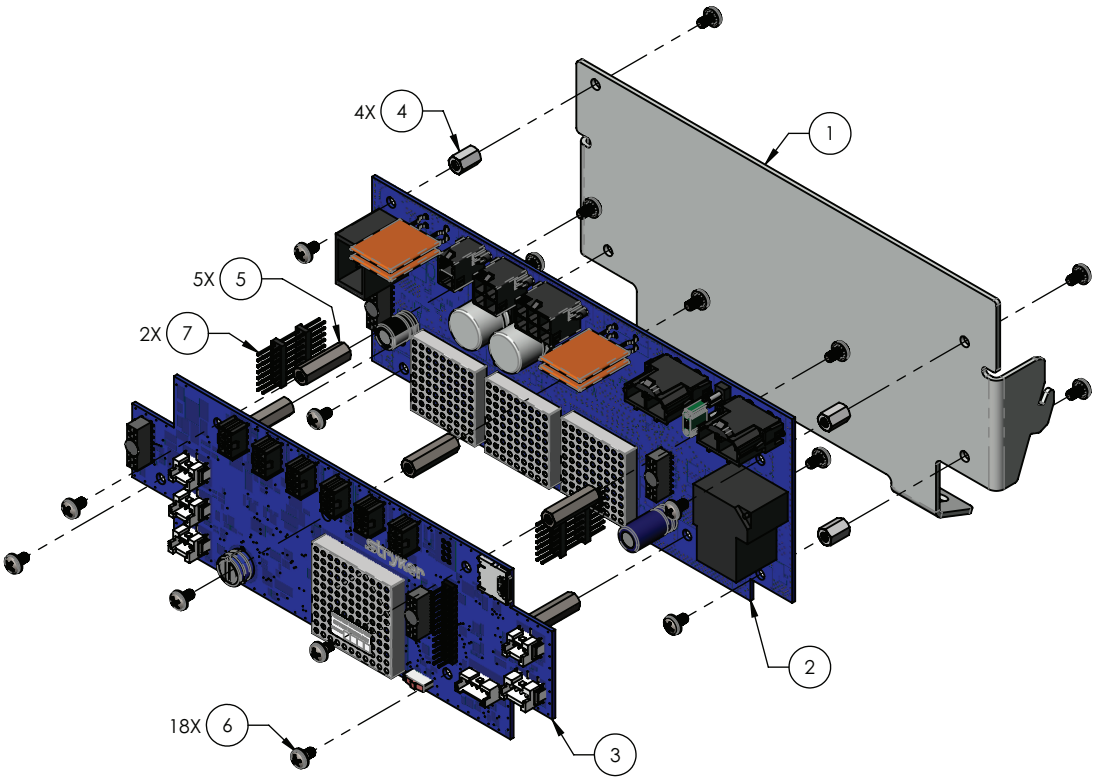

Item	Number	Name	Quantity
1	5900520235P	Bracket, MCU-PMB support plated	1
2	5900400040	PCBA, IOM PMB	1
3	5900400037	PCBA, MCU	1
4	5900370116	Standoff, f-f #6-32 hex 1/4” x 3/8” lg. ZnPl steel	4
5	5900370117	Standoff, f-f #6-32 hex 1/4” x 7/8” lg. 18-8 ss	5
6	5900340037	Screw, pan ph sems #6-32 x 0.25” lg. 18-8 ss	18
7	5900490018	Conn, 2.54mm board stacker 2x7 pos	2

Deck assembly, head section

5900200055 Rev E (Reference only)

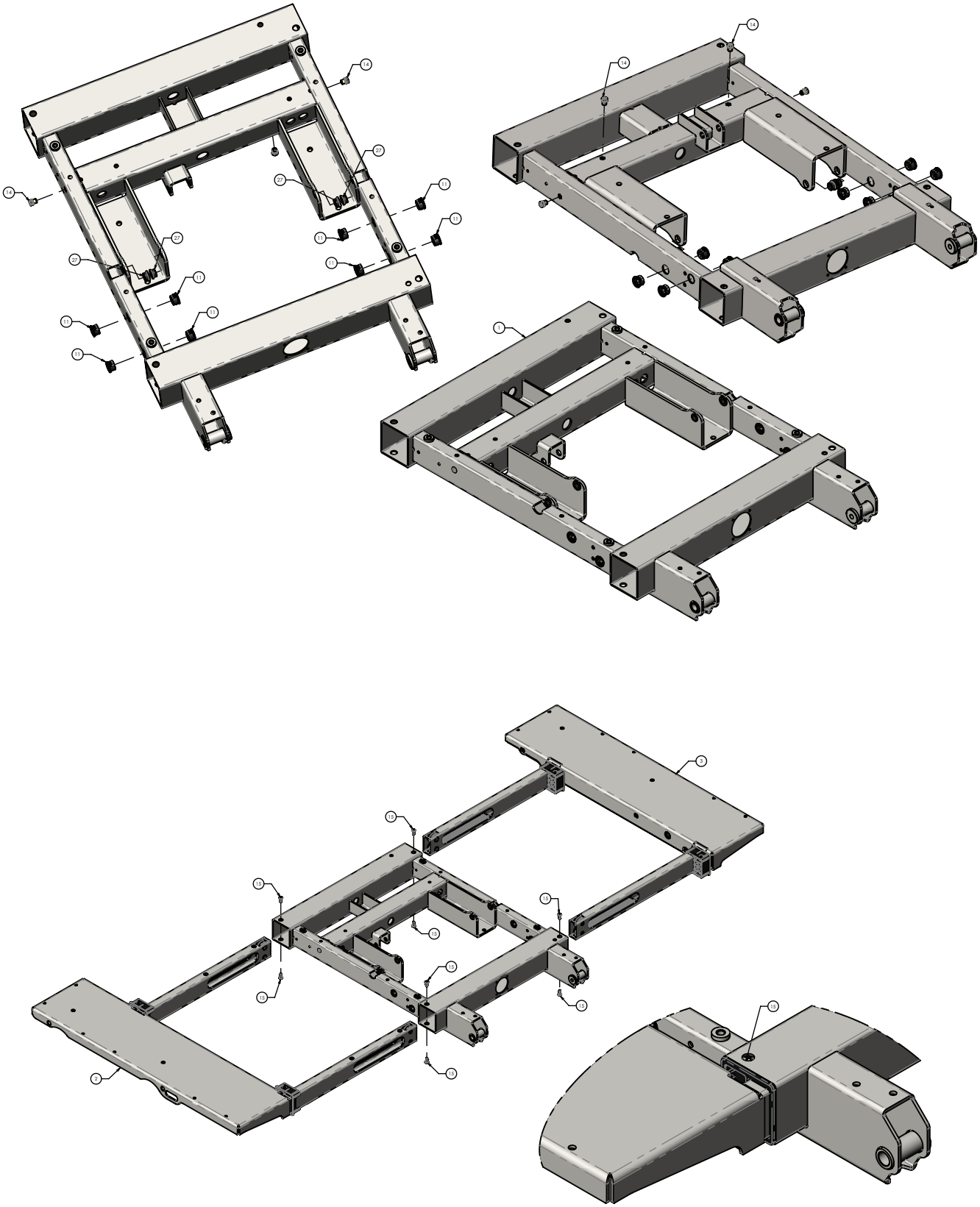

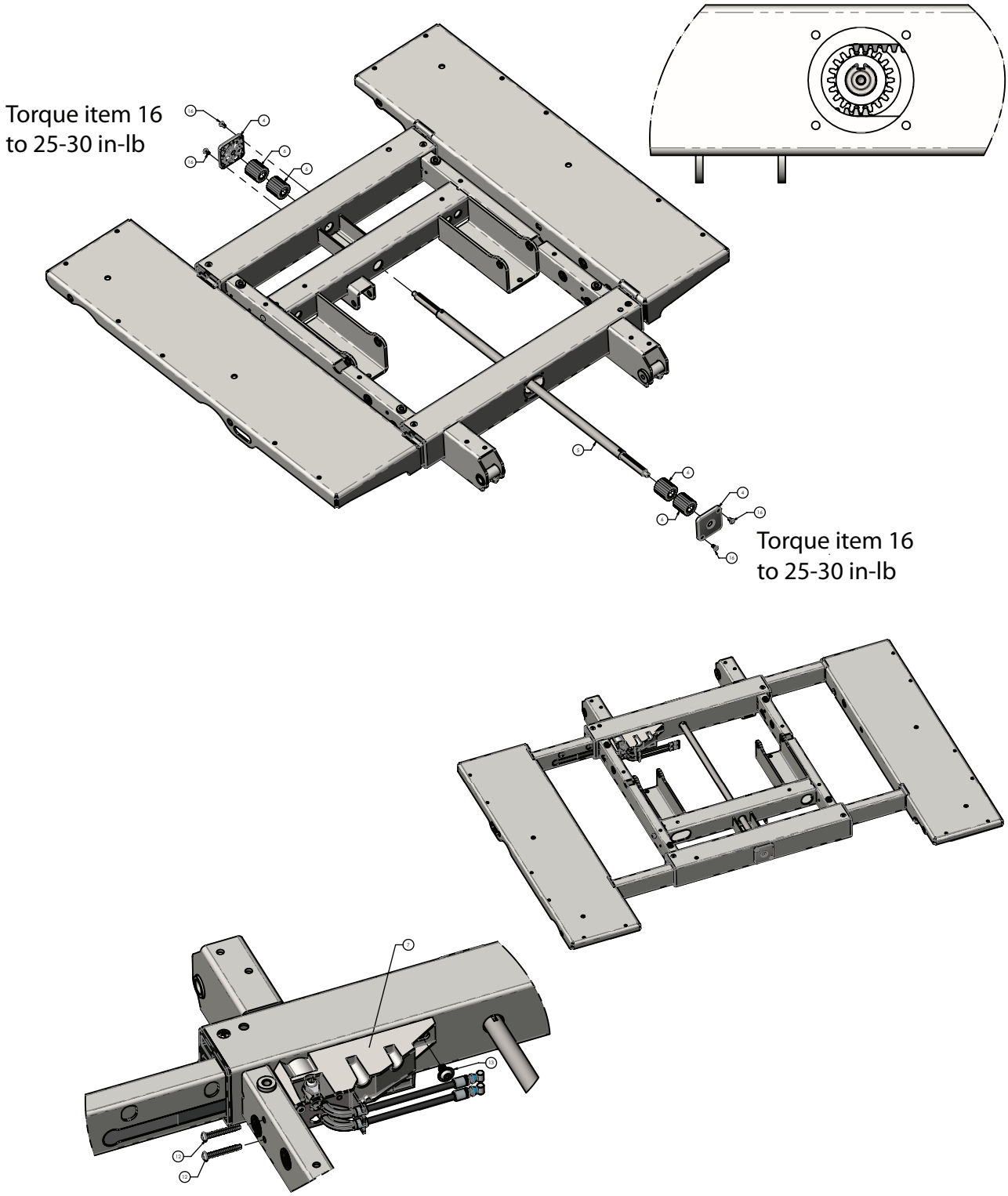
Torque item 16
to 25-30 in-lb
Torque item 16
to 25-30 in-lb

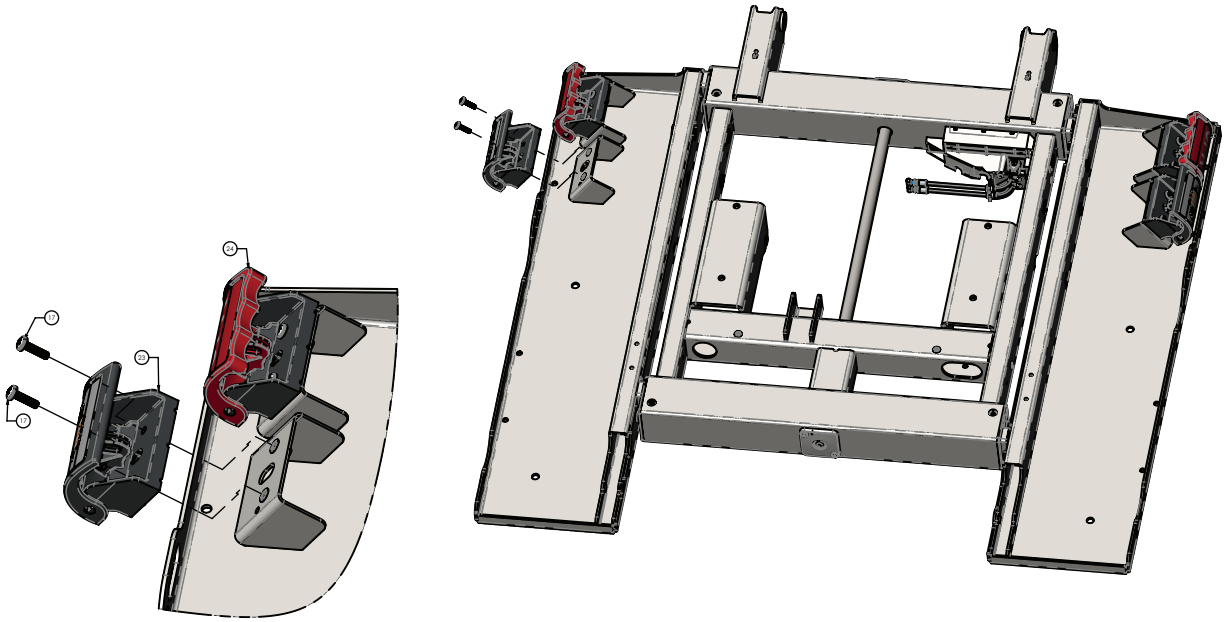
19
20
17
18

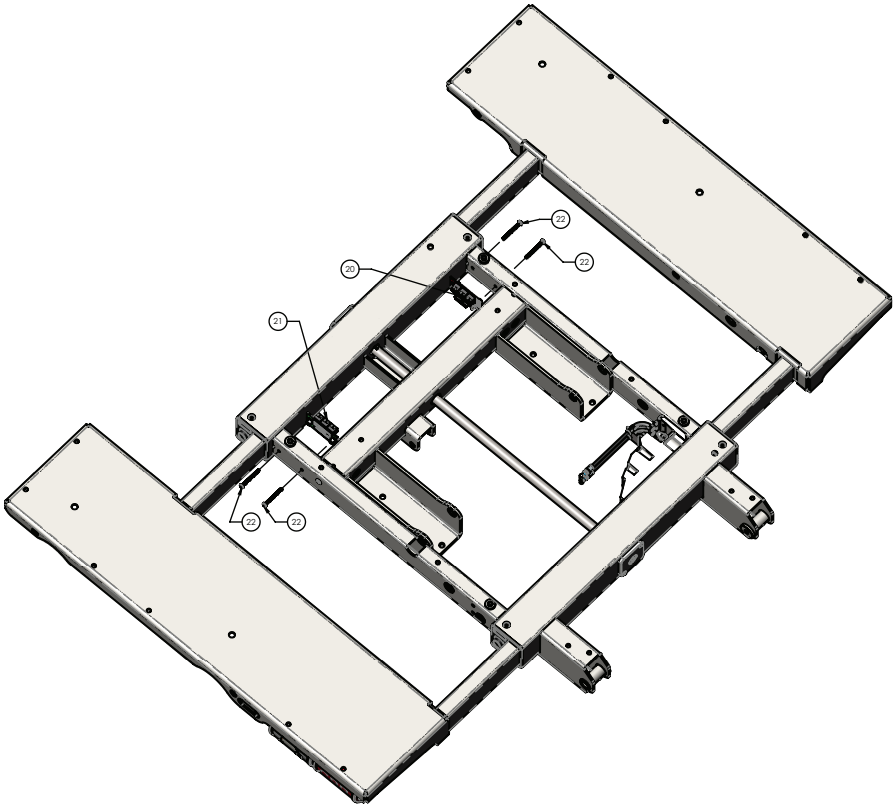
22
22
20
21
22
22

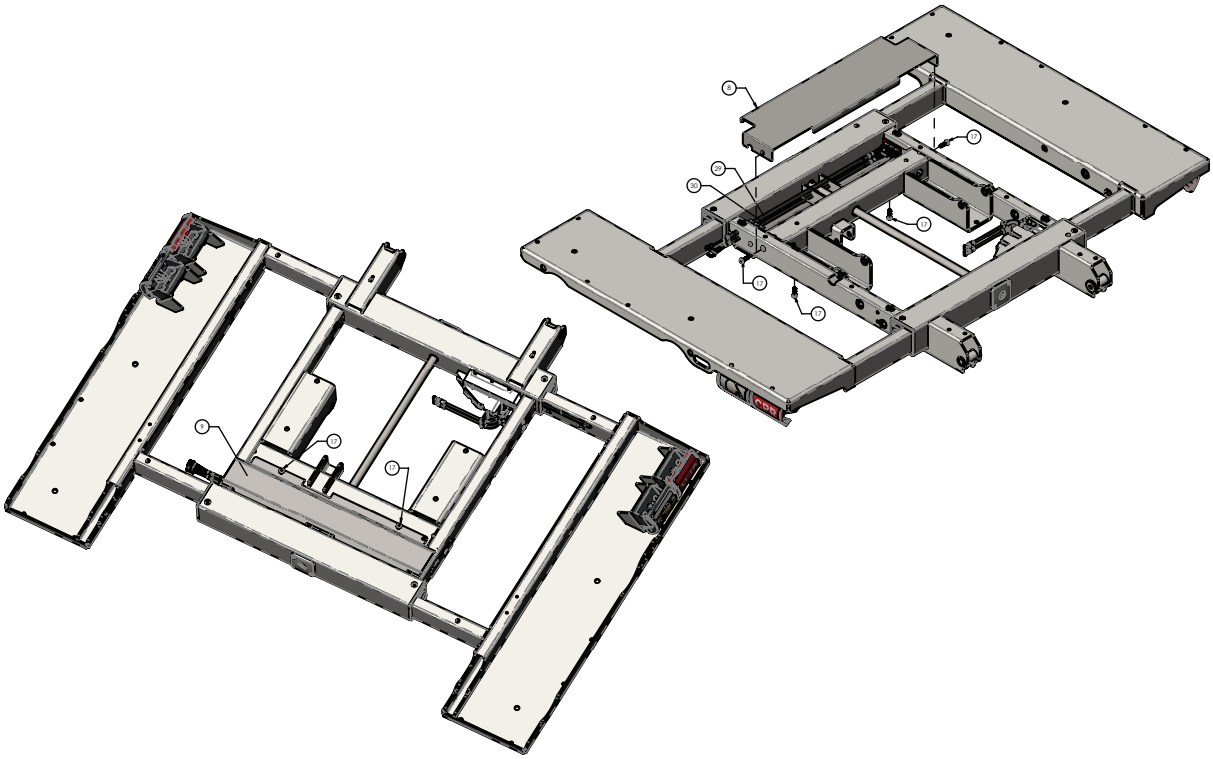
8
17
20
10
11
12
7
9
11
13

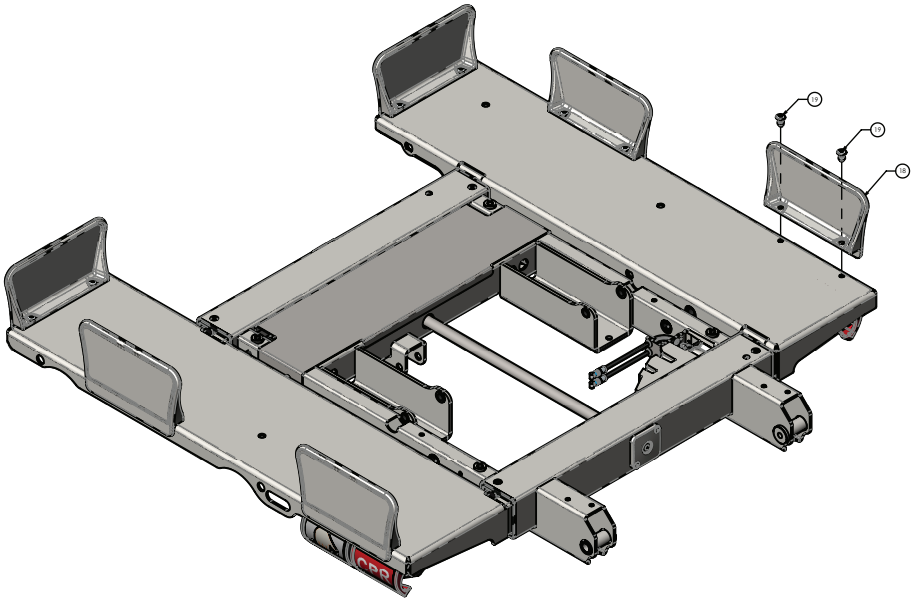
13
17
18

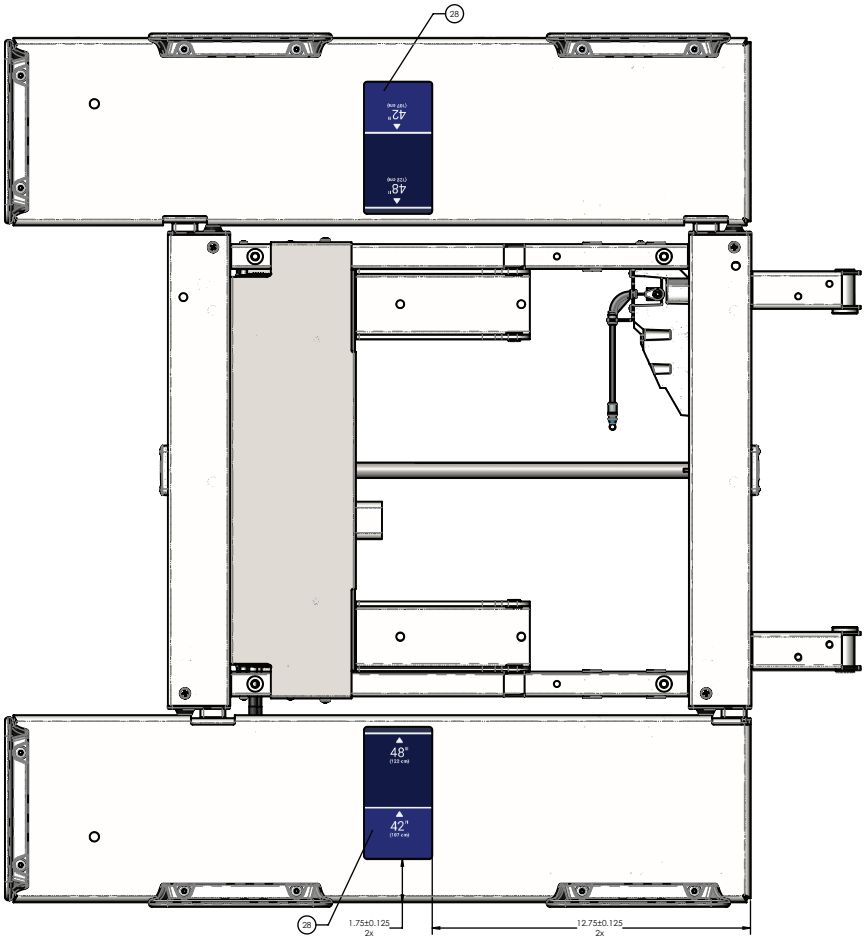
48"
(122 cm)
42"
(107 cm)
48"
(122 cm)
42"
(107 cm)
26
26
1.75±0.125
2x
12.75±0.125
2x

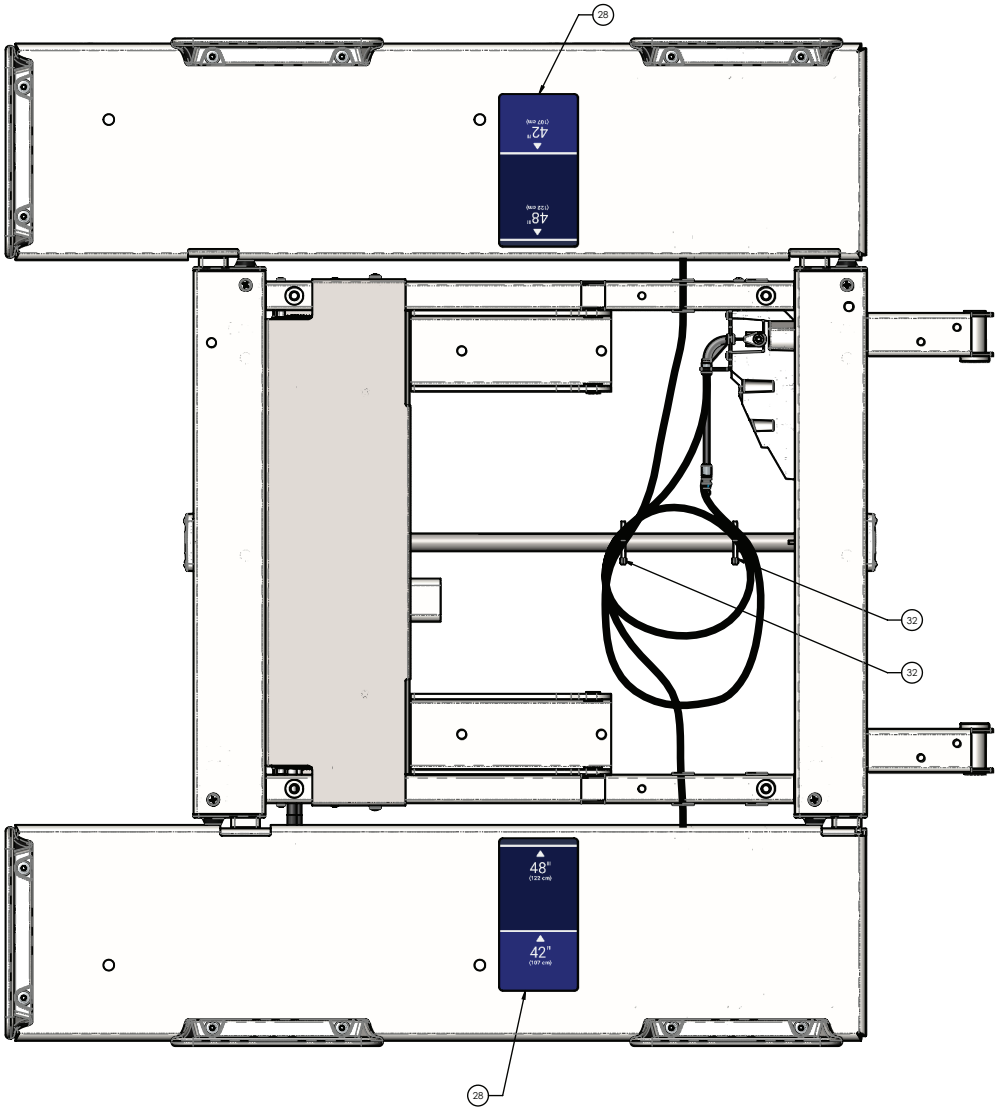
28
48"
(122 cm)
42"
(107 cm)
32
32
48"
(122 cm)
42"
(107 cm)
28

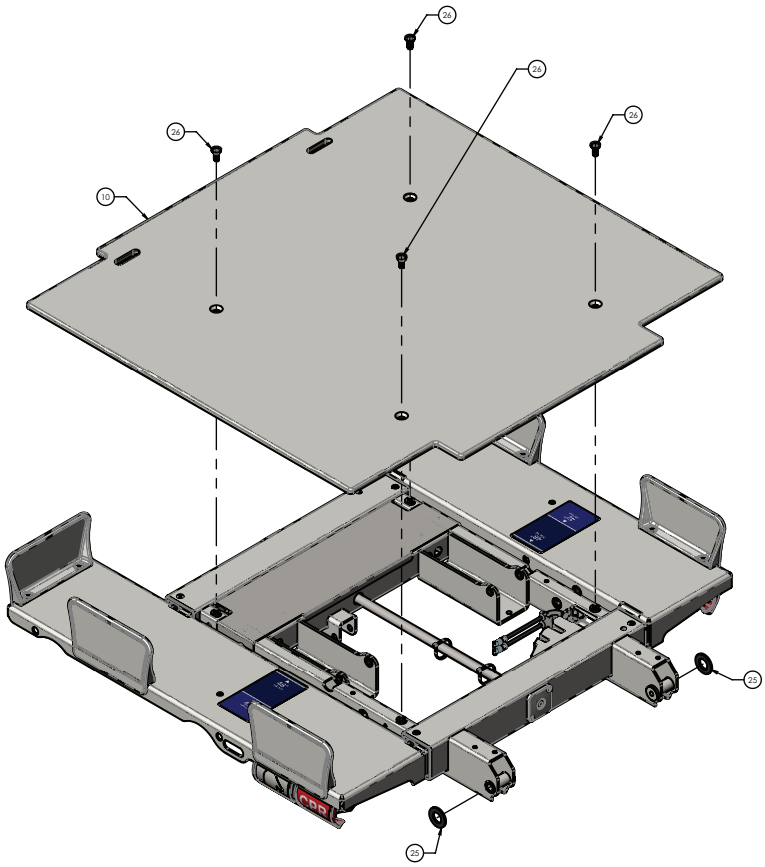
26
26
26
10
25
25

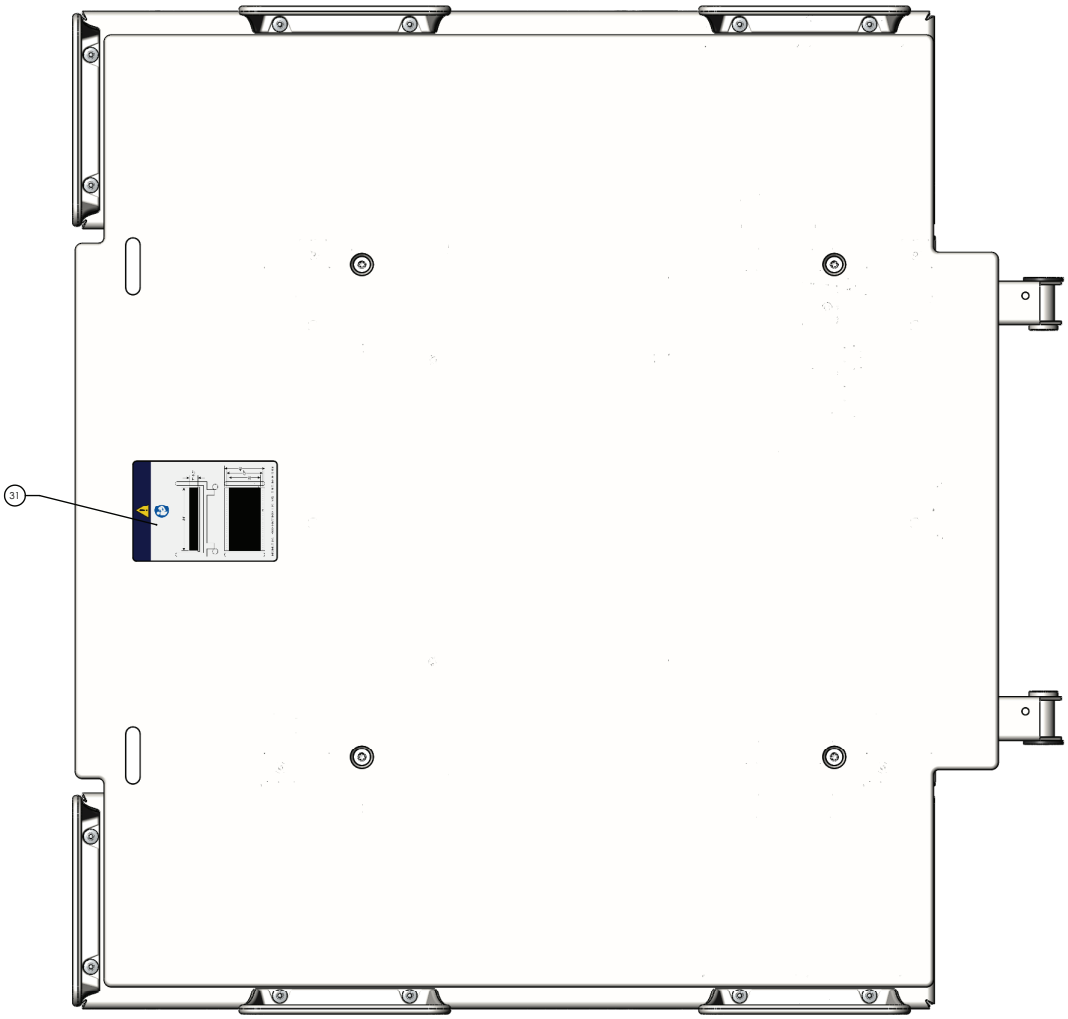

Item	Number	Name	Quantity
1	5900240042	Deck weldment, head section	1
2	5900200068	*Deck pan assembly, head deck, patient right* (page 137)	1
3	5900200069	*Deck pan assembly, head deck, patient left* (page 138)	1
4	5900600007	Bushing, pinion shaft cover	2
5	5900500072	Pinion shaft, head deck	1
6	5900560003	Pinion gear, expandable deck	4
7	5900200051	*Head deck position lock assembly - 5900200051* (page 139)	1
8	5900520103P	Cover pan, head deck electrical top plated	1
9	5900520104P	Cover pan, head deck electrical bottom plated	1
10	5900620007	Cover, head deck	1
11	5900370022	Grommet, push-in locking 5/8" hole	8
12	5900340105	Screw, plastite pan head torx #8-16 x 1.25"lg zinc	2
13	5900340101	Screw, rd hd flg hex drive 1/4-unc x 3/8lg zinc	1
14	5900310020	Nutsert, #10-unf thick sheet hex body - zinc	4

Item	Number	Name	Quantity
15	5900340114	Screw, plastite pan head ph #10-14 x 1/2" lg znpl	8
16	5900340017	Screw, pan ph #8-unc x 0.3125	4
17	5900340090	Screw, sems pan ph #10-32unf x 3/4lg int wash zinc	12
18	5900600035	Mattress keeper, short	6
19	0025-120-000	Rivet, 1/4 x 0.600" lg blind alum	12
20	5900400051	PCBA, jctn hd/ft pl-in/pr-out	1
21	5900400052	PCBA, jctn hd/ft pl-out/pr-in	1
22	5900340097	Screw, sems pan ph #6-32x1-1/2lg int wash zinc pl	4
23	5900200159	*Deck expansion handle assembly - 5900200159* (page 171)	2
24	5900200160	*CPR handle assembly - 5900200160* (page 141)	2
25	5900320021	Washer, flat 1.375 x 0.75 x 0.125 acetal	2
26	5900340081	Screw, flat Torx head 5/16-18 x 3/4 tri lobe zinc	4
27	5900330003	Bushing, flg 0.375x0.500x0.313lg (flg 0.625x0.062)	4
28	5900690076	Label, indicator deck width	2
29	5900430091	HRNS, jctn pwr-comm int	1
30	5900430092	HRNS, jctn nc-spkr int	1
31	5900180089	Label, mattress replacement	1
32	3000-300-113	Cable tie, nylon 8” LG	2

Deck pan assembly, head deck, patient right

5900200068 Rev A (Reference only)

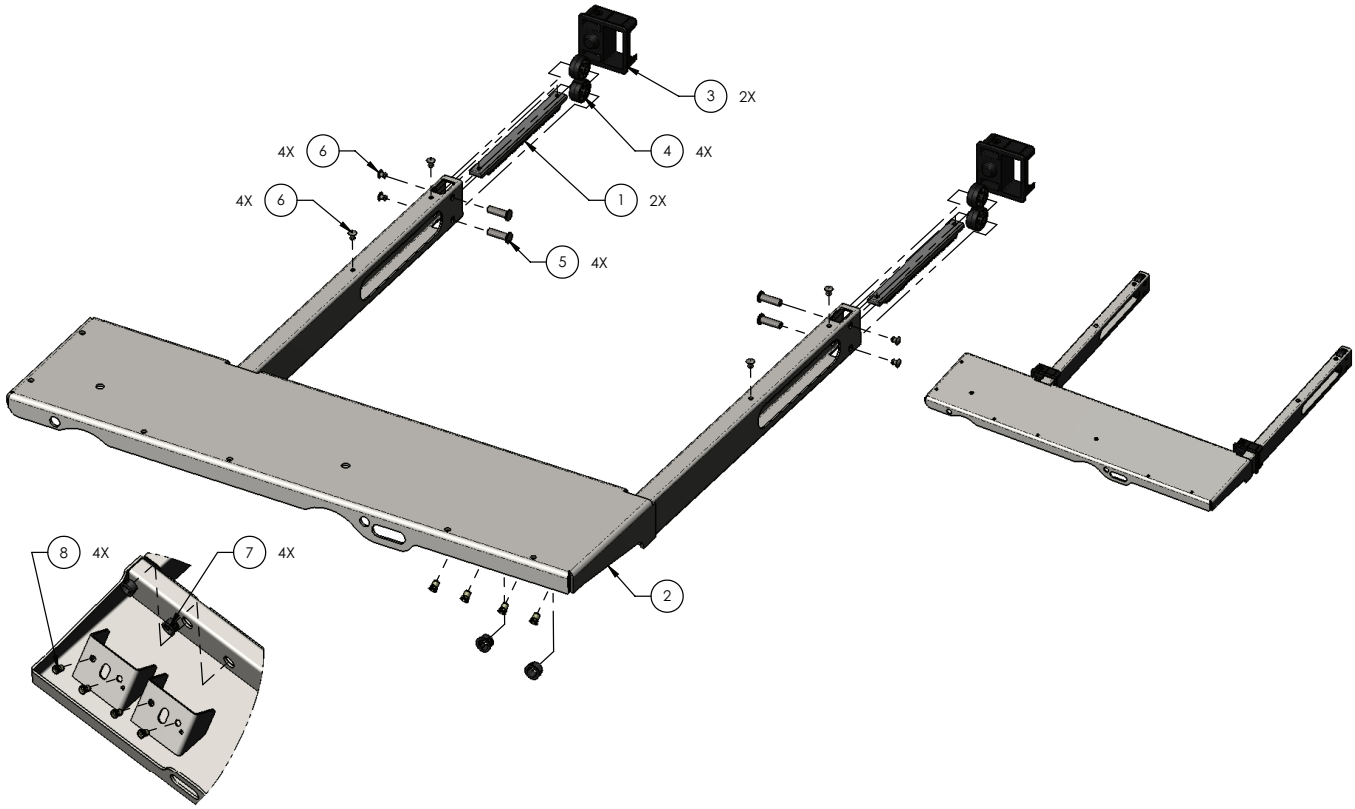

Item	Number	Name	Quantity
1	5900560011	Rack, expandable deck	2
2	5900240043	Pan weldment, head deck, patient right	1
3	5900600006	Bearing, expandable deck guide	2
4	5900600034	Roller, expandable deck	4
5	5900500028	Pin, expandable deck roller	4
6	0025-079-000	Rivet, 3/16 domed sst	8
7	5900370022	Grommet, push-in locking 5/8” hole	4
8	5900310020	Nutsert, #10-UNF thick sheet hex body-zinc	4

Deck pan assembly, head deck, patient left

5900200069 Rev A (Reference only)

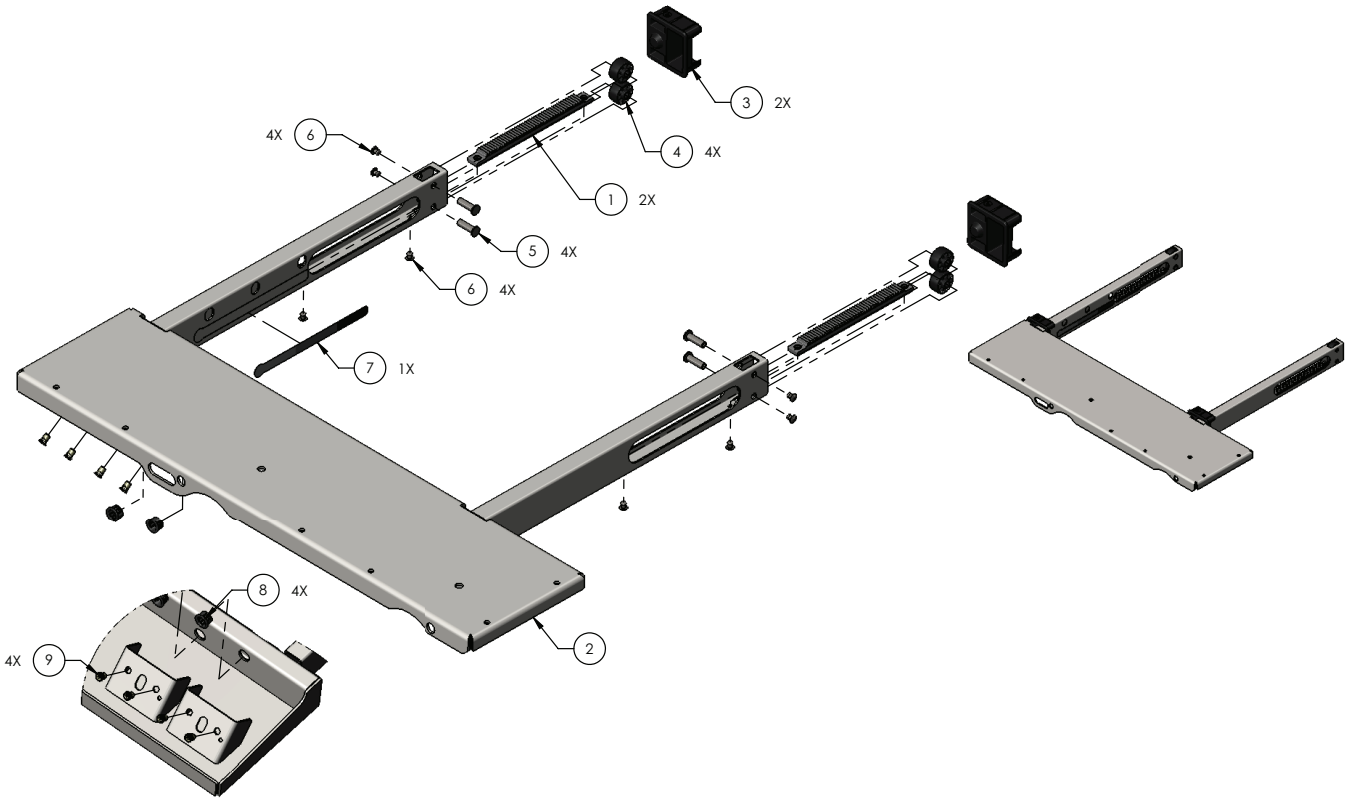

Item	Number	Name	Quantity
1	5900560011	Rack, expandable deck	2
2	5900240044	Pan weldment, head deck, patient left	1
3	5900600006	Bearing, expandable deck guide	2
4	5900600034	Roller, expandable deck	4
5	5900500028	Pin, expandable deck roller	4
6	0025-079-000	Rivet, 3/16 domed sst	8
7	5900690050	Decal, deck lock position sensor	1
8	5900370022	Grommet, push-in locking 5/8” hole	4
9	5900310020	Nutsert, #10-UNF thick sheet hex body-zinc	4

Head deck position lock assembly - 5900200051

Rev A (Reference only)

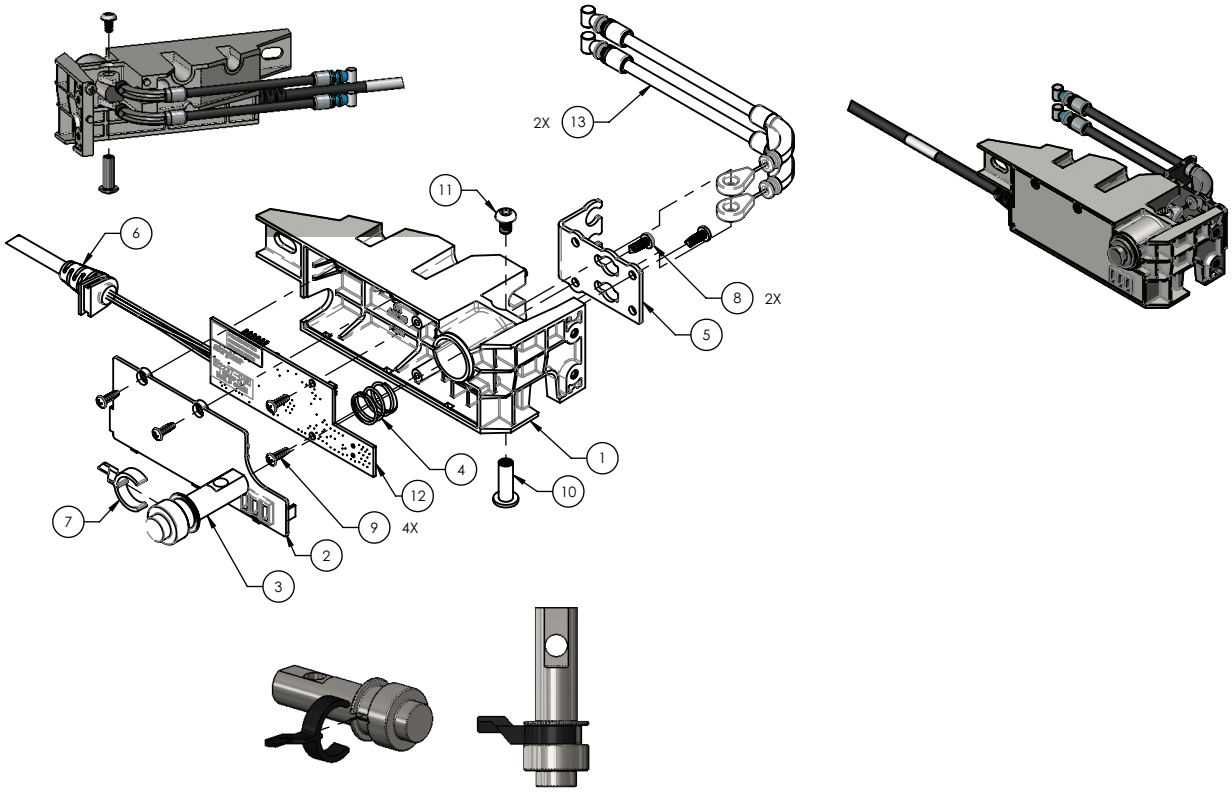

Item	Number	Name	Quantity
1	5900600048	Housing, deck lock/position sensor	1
2	5900600049	Cover, deck lock/sensor housing	1
3	5900500033	Pin, deck lock	1
4	5900370017	Spring, compression deck lock	1
5	5900520100	Plate, deck lock cable mount	1
6	5900430030	HRNS, deck lock/position snsr head deck	1
7	5900600053	Arm, deck lock sensor plunger	1
8	5900340009	Screw, pan ph #6-unc x 0.375 tri lobe	2
9	5900340018	Screw, #4-20 tri-lobular 3/8lg	4
10	5900370018	Binding barrel, 10-24 x 3/4lg zinc plated	1
11	0004-665-000	Screw, bhcs #10-unc x 0.313 w/patch	1
12	590040004101	PCBA, iom deck pos mon head	1
13	5900370011	Cable, deck extend push/pull	2

Head with CPR release actuator assembly - 5900200157

Rev A (Reference only)

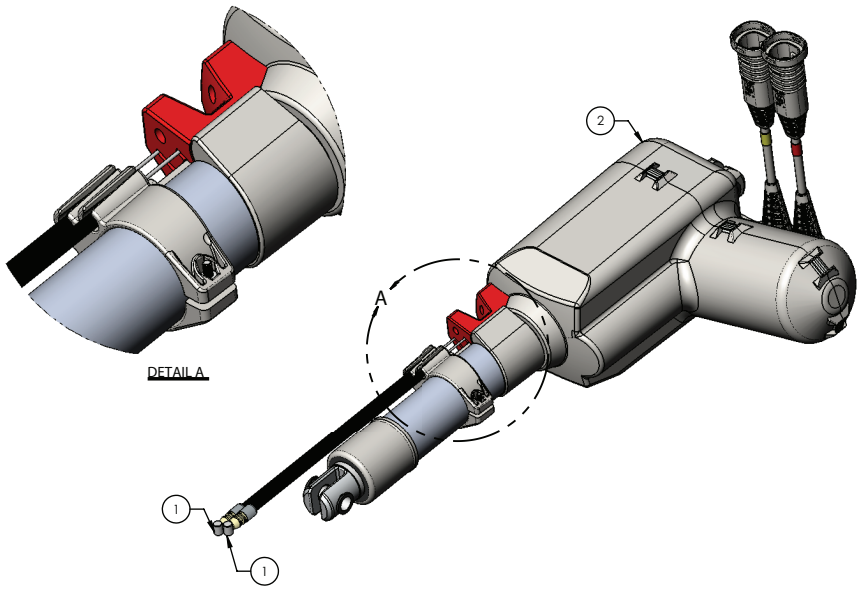

Item	Number	Name	Quantity
1	5900370010	Cable, CPR push/pull	2
2	5900420009	Actuator, w/int switch-head	1

CPR handle assembly - 5900200160

Rev B (Reference only)

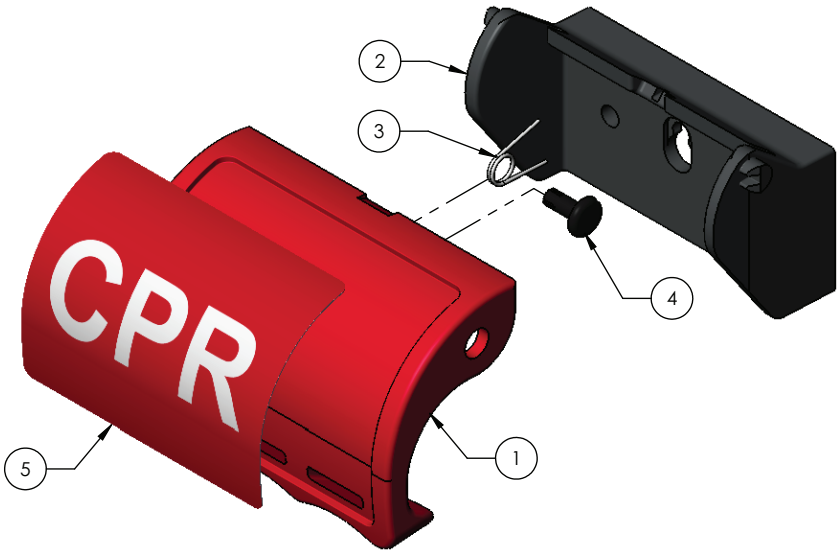

Item	Number	Name	Quantity
1	5900600085	Handle, CPR	1
2	5900600086	Backplate, handle	1
3	5900370109	Spring, torsion CPR pull handle	1
4	5900370107	Snap rivet, dia .170 hole x .250 panel thk	1
5	5900690082	Label, CPR handle	1

Deck assembly, seat section

5900200041 Rev E (Reference only)

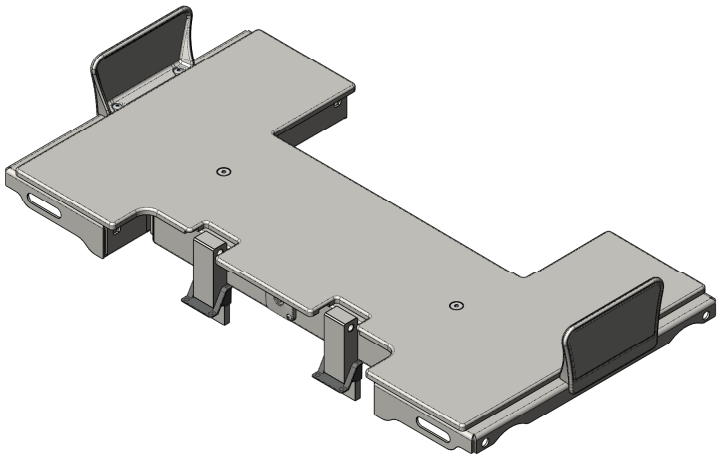

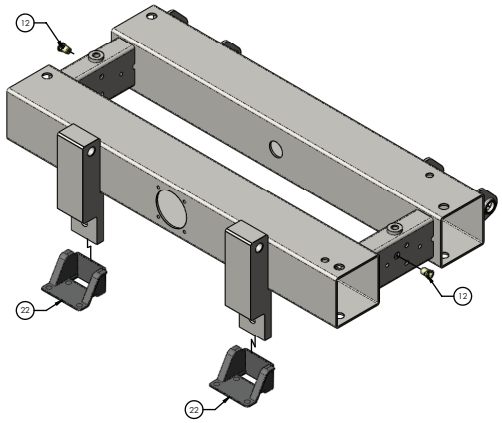

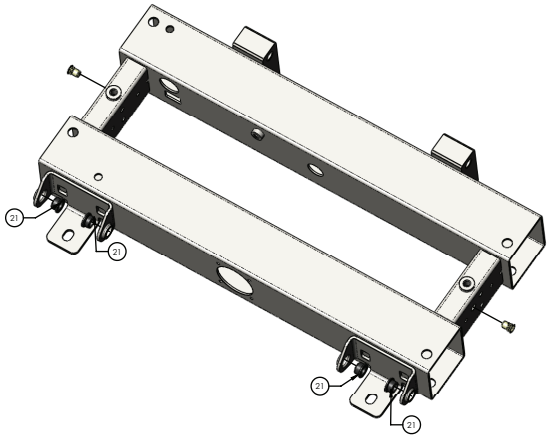

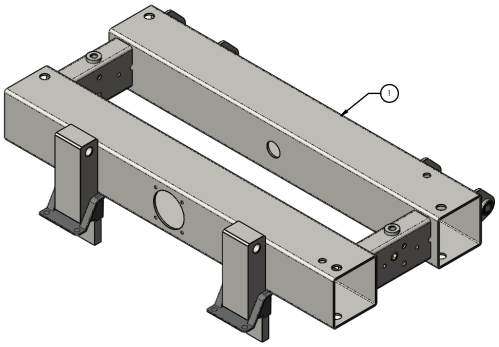

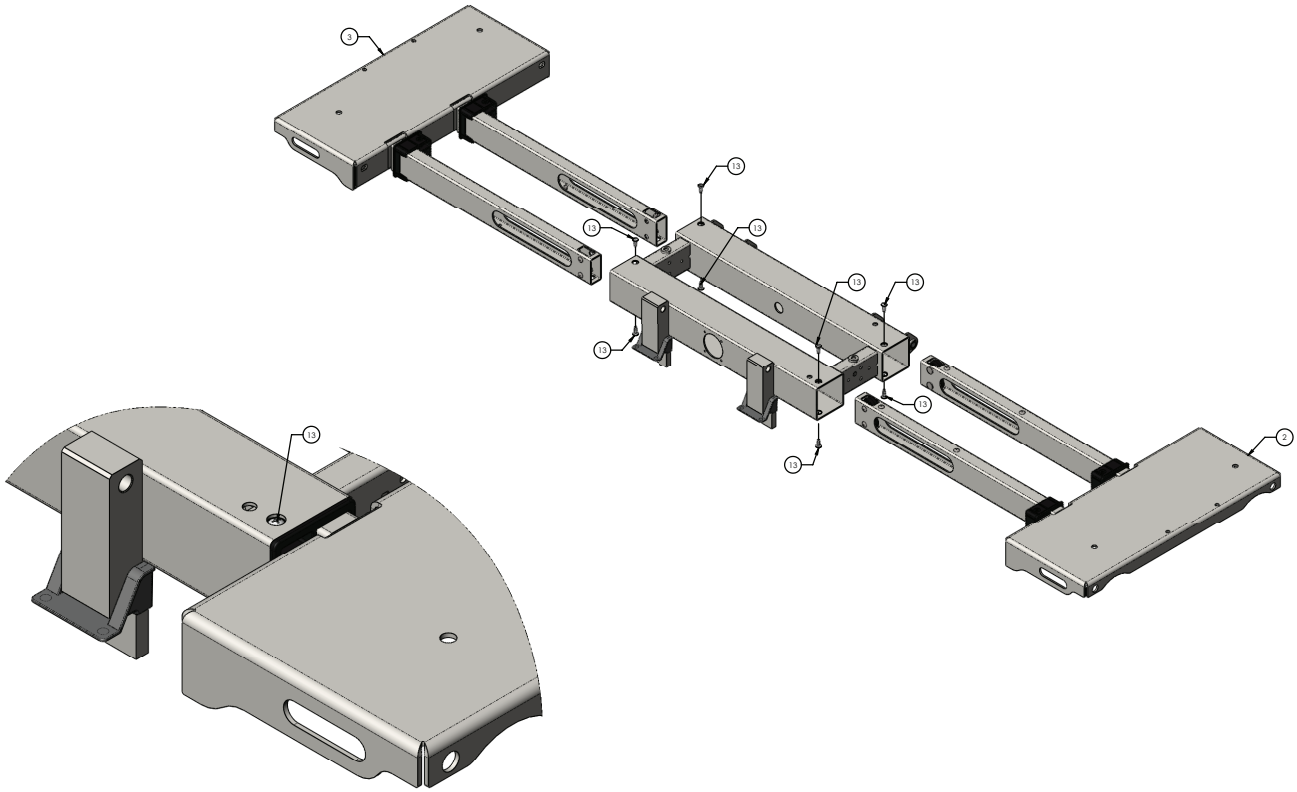
3
13
13
13
13
13
13
13
13
19
2

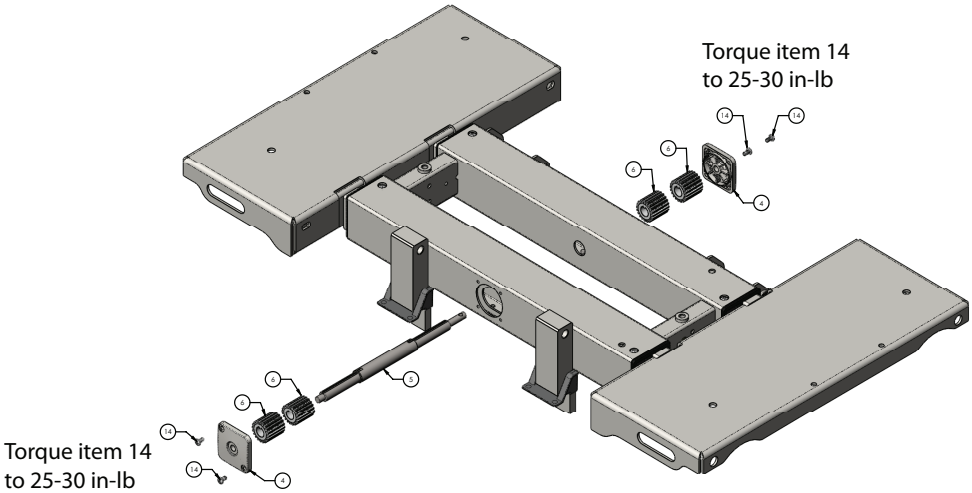
Torque item 14
to 25-30 in-lb
17
14
6
4
4
5
8
6
14
14
4
Torque item 14
to 25-30 in-lb

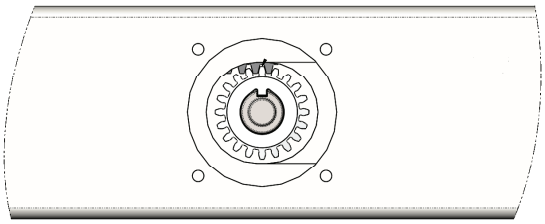

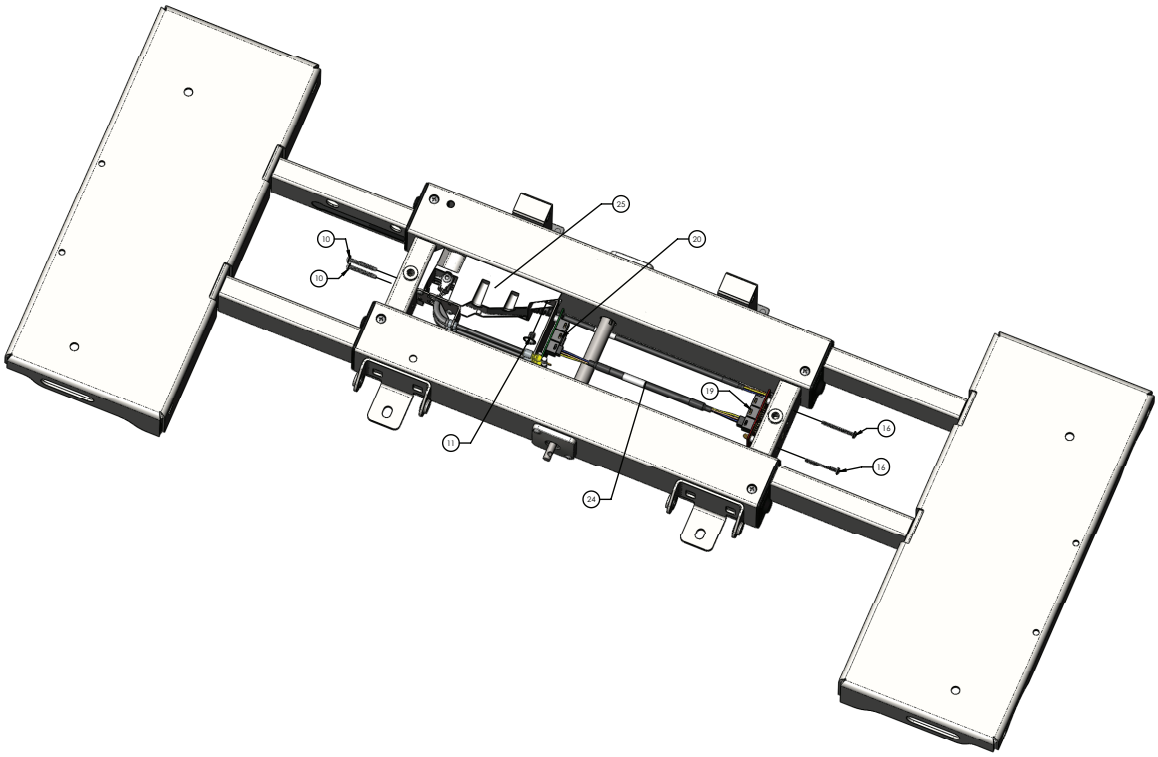
25
20
18
10
19
11
24
14
15

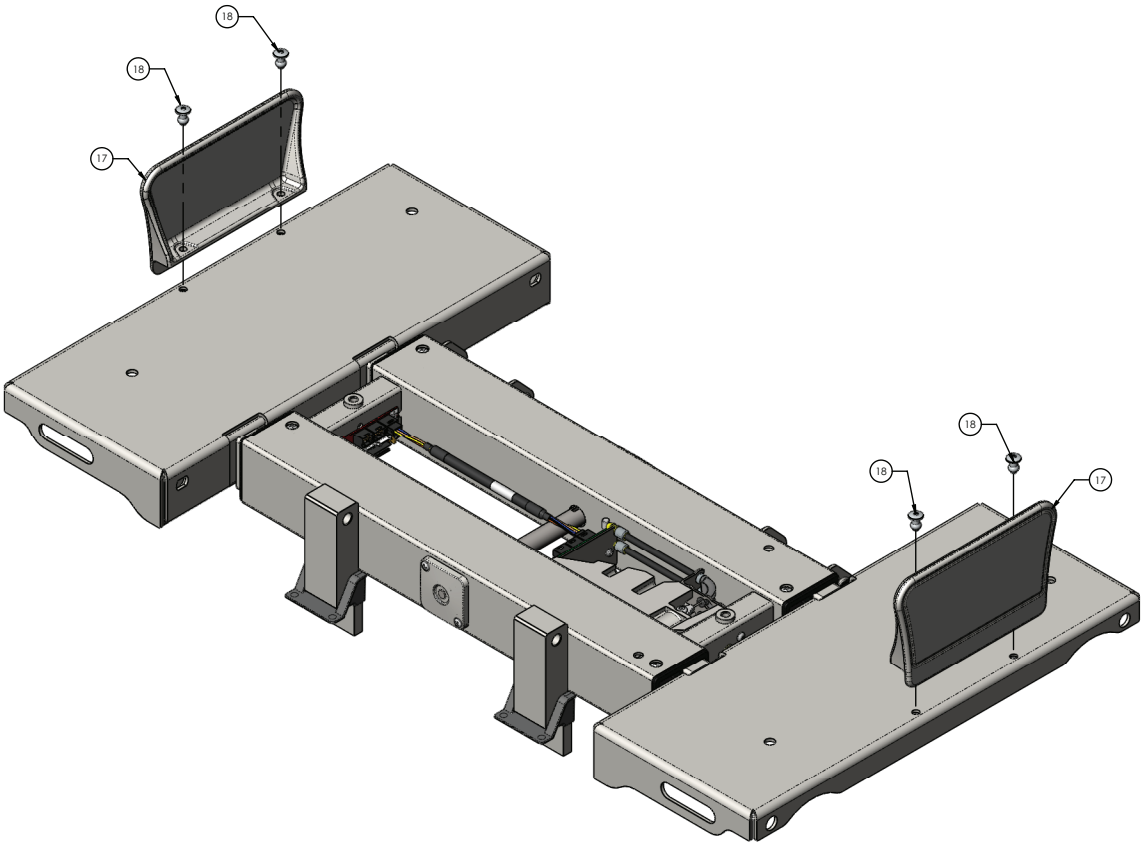
18
18
17
18
18
17

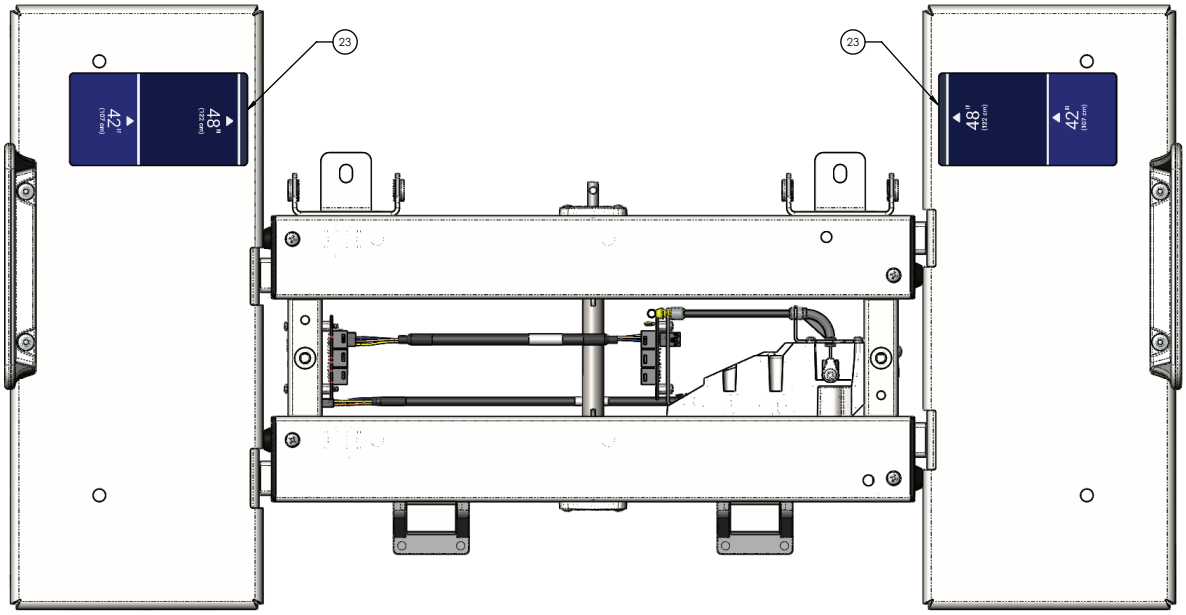
23
23
42"
(107 cm)
48"
(122 cm)
48"
(122 cm)
42"
(107 cm)

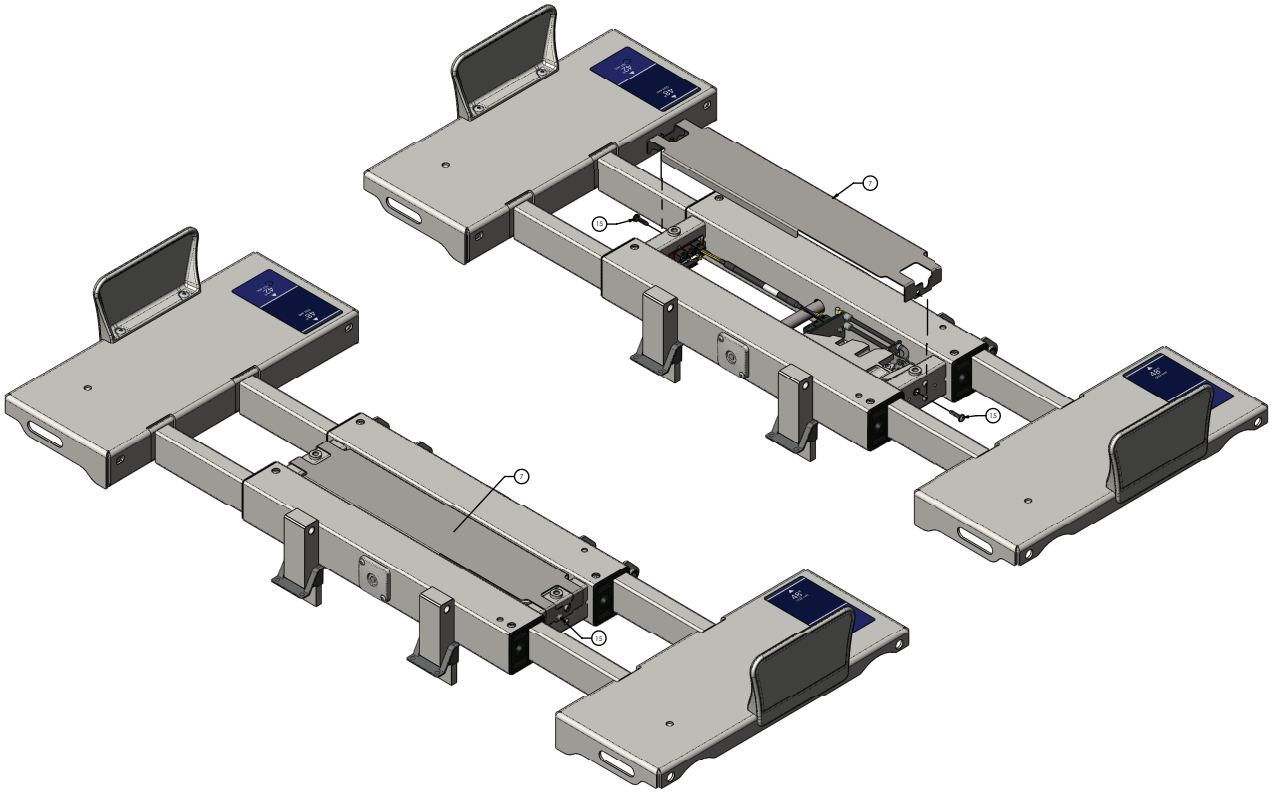
7
19
19
7
19

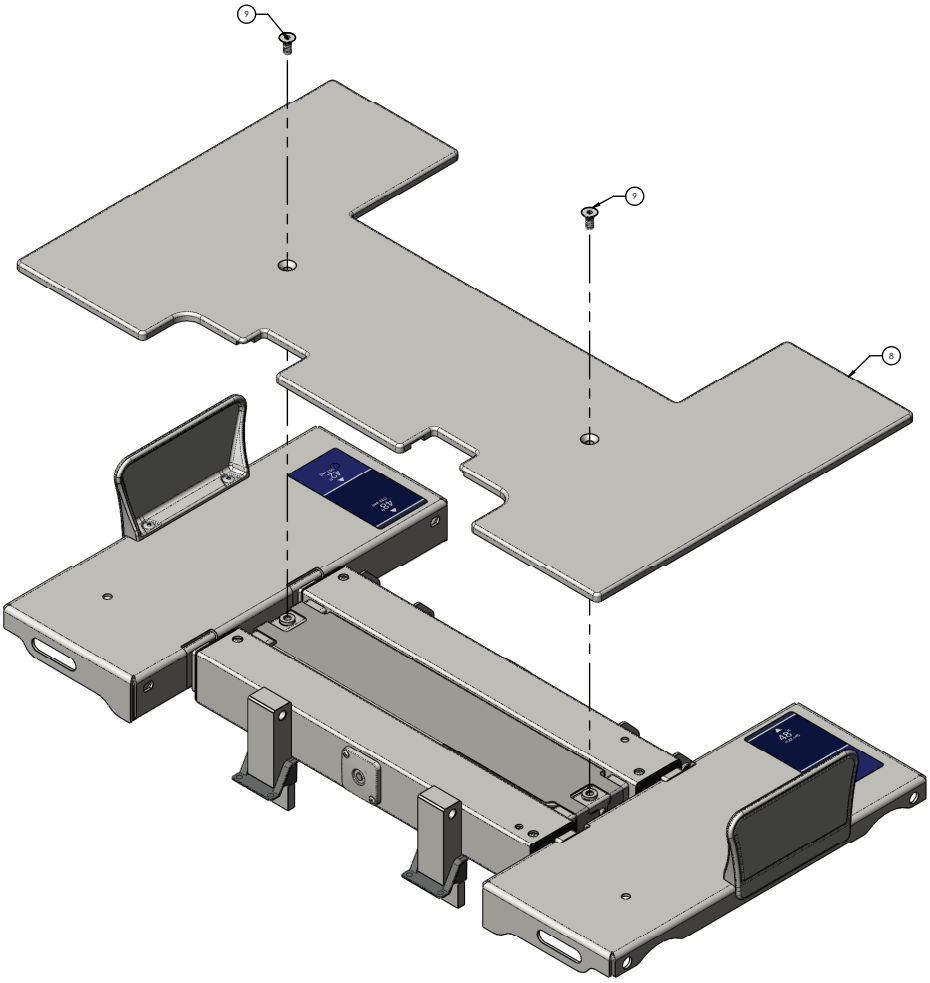

Item	Number	Name	Quantity
1	5900240025	Frame weldment, seat deck	1
2	5900200038	*Deck pan assembly, seat deck, patient right* (page 149)	1
3	5900200039	*Deck pan assembly, seat deck, patient left* (page 150)	1
4	5900600007	Bushing, pinion shaft cover	2
5	5900500027	Pinion shaft, seat deck	1
6	5900560003	Pinion gear, expandable deck	4
7	5900520200P	Cover pan, seat deck plated	1
8	5900620005	Cover, seat deck	1
9	5900340081	Screw, flat hex head 5/16-18x3/4lg zinc	2
10	5900340105	Screw, plastite pan head Torx #8-16 x 1.25"LG zinc	2
11	5900340101	Screw, RD HD FLG hex drive 1/4-UNC x 3/8LG zinc	1
12	5900310020	Nutsert, #10-unf thick sheet hex body - zinc	2
13	5900340114	Screw, plastite pan head PH #10-14 x 1/2" LG ZNPL	8
14	5900340017	Screw, pan PH #8-UNC x 0.3125	4
15	5900340090	Screw, sems pan PH #10-32UNF x 3/4LG INT wash zinc	2

Item	Number	Name	Quantity
16	5900340097	Screw, sems pan PH #6-32x1-1/2LG INT wash zinc PL	2
17	5900600035	Mattress keeper, short	2
18	0025-120-000	Rivet, 1/4 x 0.600" LG blind alum	4
19	5900400051	PCBA, s1 jctn hd/ft pl-in/pr-out	1
20	5900280016	Elec assembly, jctn seat in-bd backplate	1
21	5900330003	Bushing, flg 0.375x0.500x0.313lg (flg 0.625x0.062)	4
22	5900600076	Guard, seat deck mounts gap filler	2
23	5900690076	Label, indicator deck width	2
24	5900430144	HRNS, jctn pwr-comm int mid	1
25	5900200152	*Seat deck position lock assembly - 5900200152* (page 151)	1

Deck pan assembly, seat deck, patient right

5900200038 Rev A (Reference only)

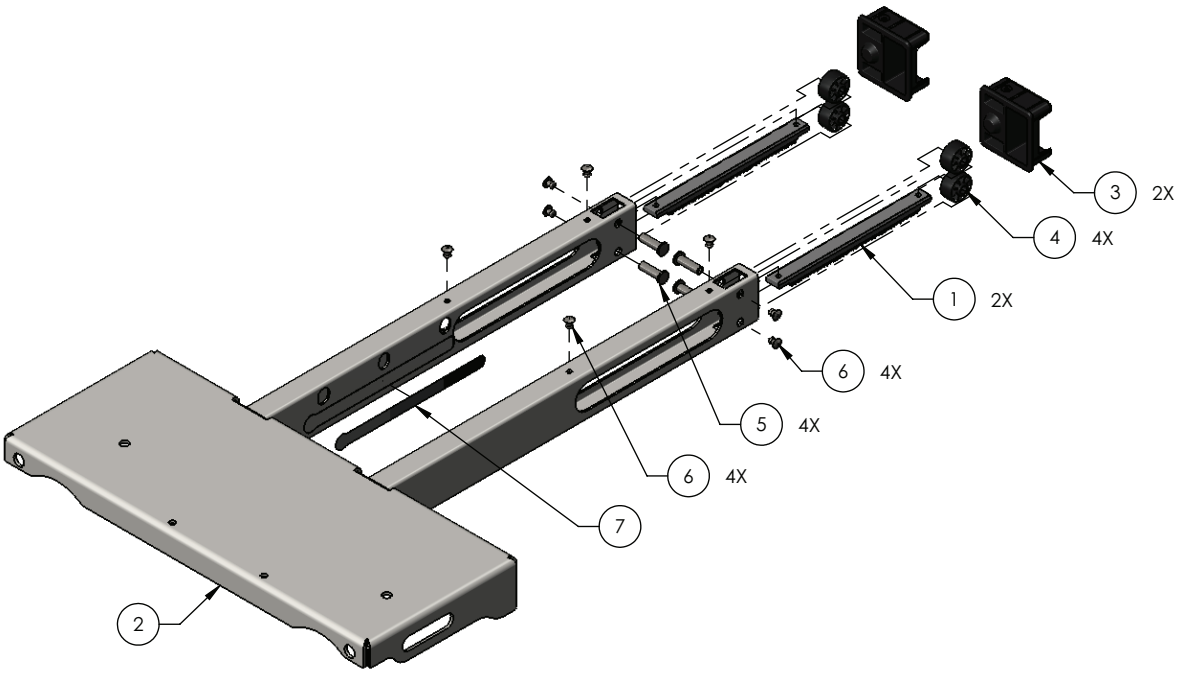

Item	Number	Name	Quantity
1	5900560011	Rack, expandable deck	2
2	5900240029	Pan weldment, seat deck, patient right	1
3	5900600006	Bearing, expandable deck guide	2
4	5900600034	Roller, expandable deck	4
5	5900500028	Pin, expandable deck roller	4
6	0025-079-000	Rivet, 3/16 domed SST	8
7	5900690050	Decal, deck lock position sensor	1

Deck pan assembly, seat deck, patient left

5900200039 Rev A (Reference only)

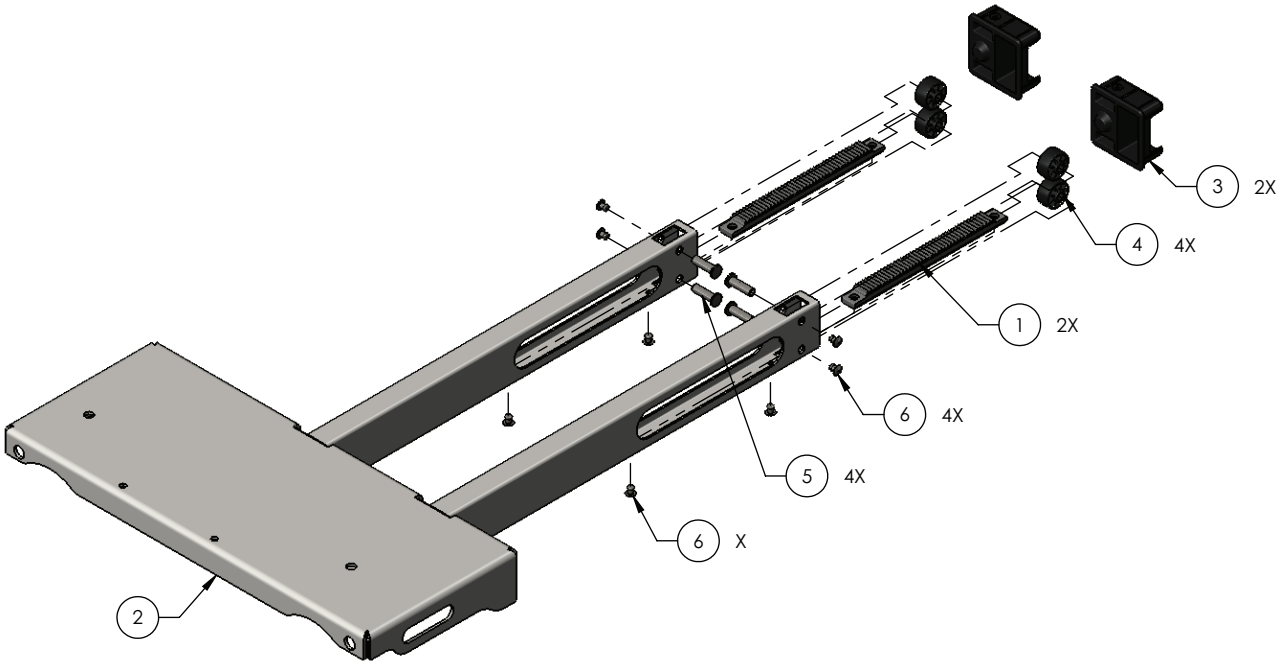

Item	Number	Name	Quantity
1	5900560011	Rack, expandable deck	2
2	5900240030	Pan weldment, seat deck, patient left	1
3	5900600006	Bearing, expandable deck guide	2
4	5900600034	Roller, expandable deck	4
5	5900500028	Pin, expandable deck roller	4
6	0025-079-000	Rivet, 3/16 domed SST	8

Seat deck position lock assembly - 5900200152

Rev A (Reference only)

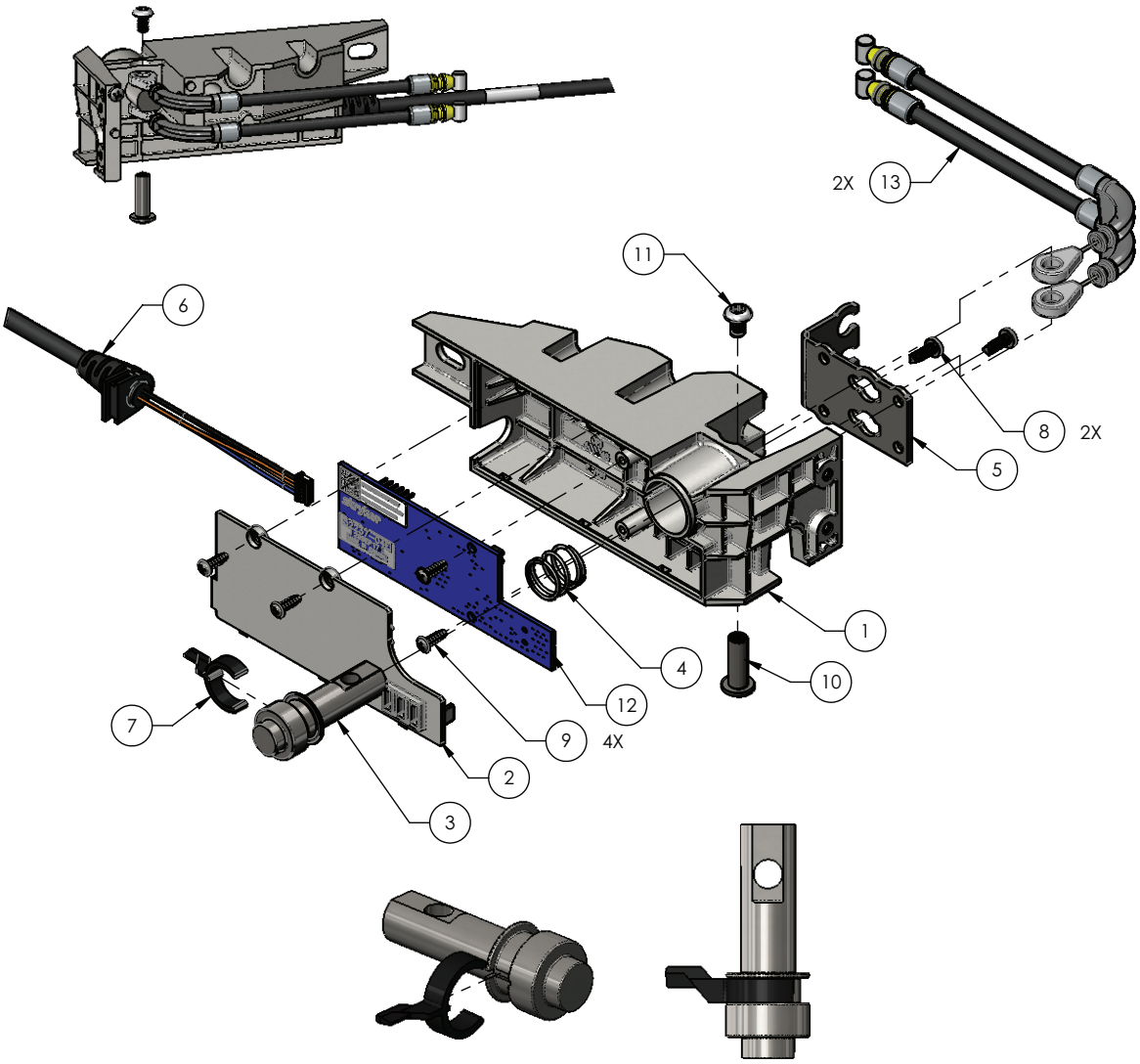

Item	Number	Name	Quantity
1	5900600048	Housing, deck lock/position sensor	1
2	5900600049	Cover, deck lock/sensor housing	1
3	5900500033	Pin, deck lock	1
4	5900370017	Spring, compression deck lock	1
5	5900520100	Plate, deck lock cable mount	1
6	5900430083	HRNS, deck lock/position snsr seat deck	1
7	5900600053	Arm, deck lock sensor plunger	1
8	5900340009	Screw, pan ph #6-unc x 0.375 tri lobe	2
9	5900340018	Screw, #4-20 tri-lobular 3/8lg	4
10	5900370018	Binding barrel, 10-24 x 3/4lg zinc plated	1
11	0004-665-000	Screw, bhcs #10-unc x 0.313 w/patch	1

Item	Number	Name	Quantity
12	590040004102	PCBA, iom deck pos mon seat	1
13	5900370073	Cable, deck extend push/pull centre section	2

Deck assembly, knee section

5900200056 Rev E (Reference only)

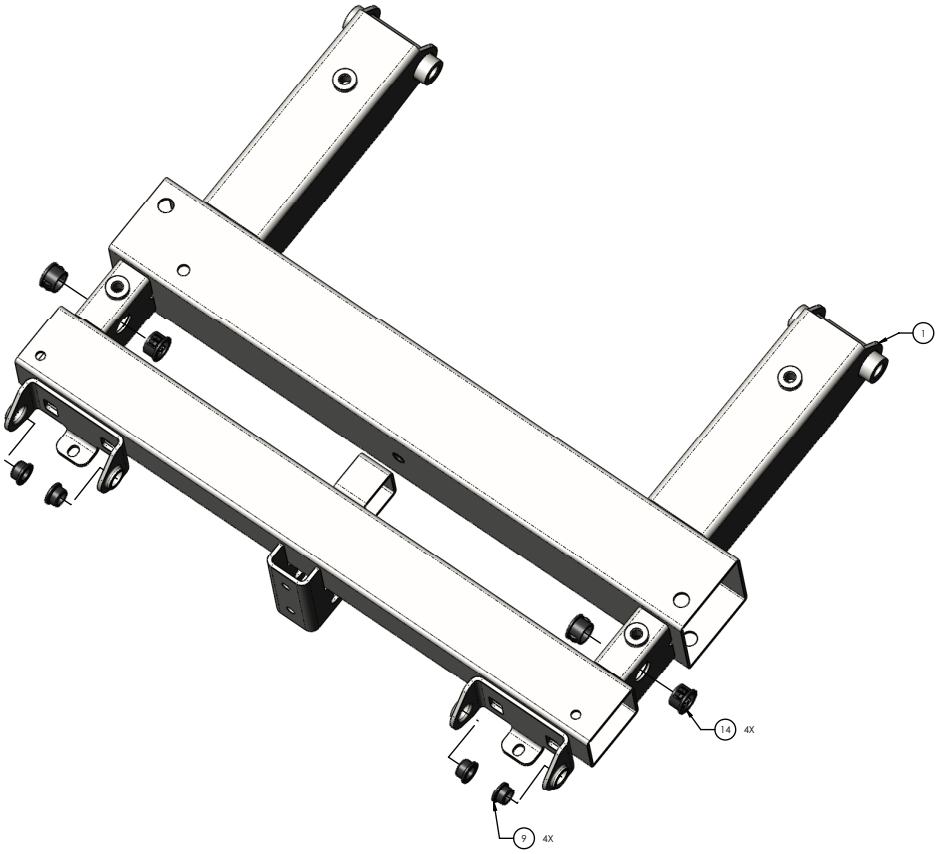

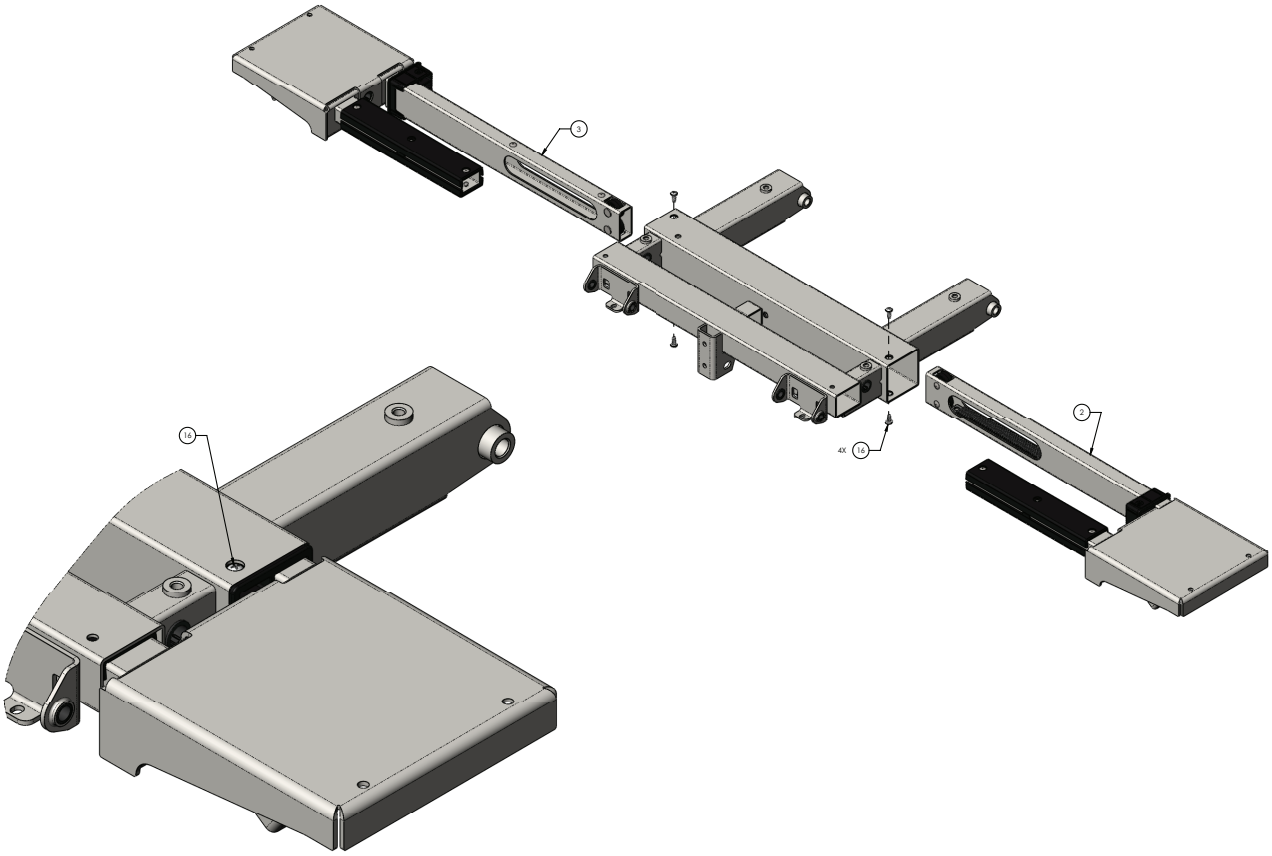
3
2
4x 14
14

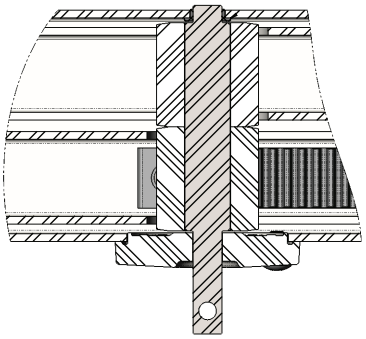

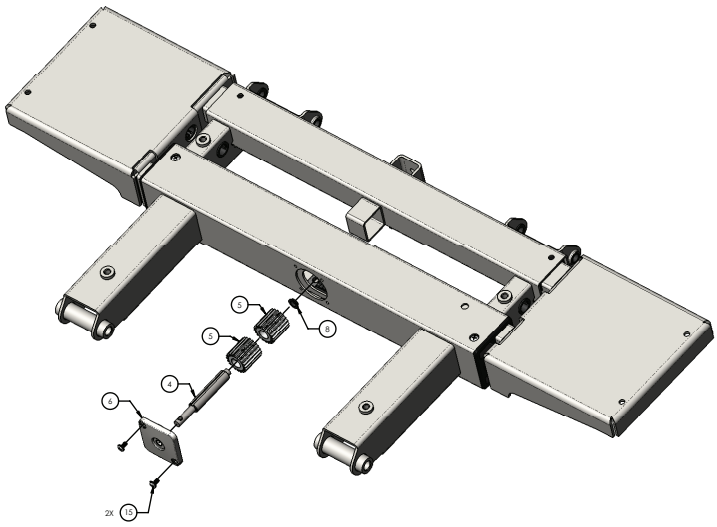

Torque item 15
to 25-30 in-lb

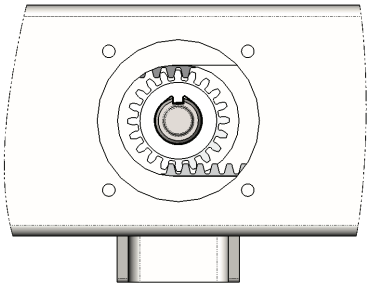

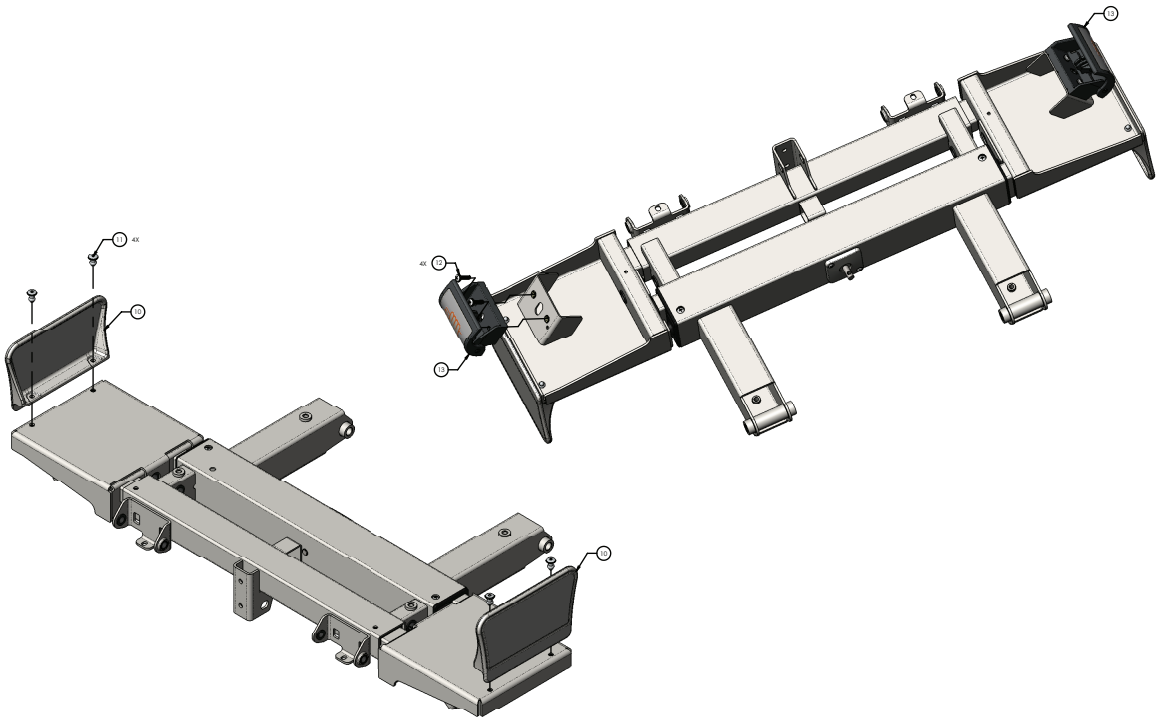

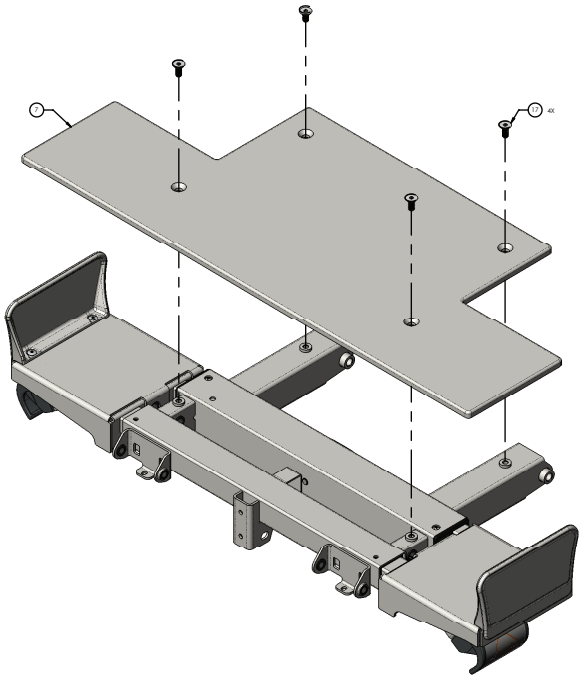

Item	Number	Name	Quantity
1	5900240045	Deck weldment, knee section	1
2	5900200072	*Deck pan assembly, knee deck, patient left* (page 158)	1
3	5900200073	*Deck pan assembly, knee deck, patient right* (page 157)	1
4	5900500041	Pinion shaft, knee deck	1
5	5900560003	Pinion gear, expandable deck	2
6	5900600007	Bushing, pinion shaft cover	1
7	5900620008	Cover, knee deck	1
8	5900330007	Bushing, flg 0.313x0.375x0.125lg (flg 0.500x0.032)	1
9	5900330003	Bushing, flg 0.375x0.500x0.313lg (flg 0.625x0.062)	4
10	5900600035	Mattress keeper, short	2
11	0025-120-000	Rivet, 1/4 x 0.600" lg blind alum	4
12	5900340090	Screw, sems pan ph #10-32unf x 3/4lg int wash zinc	4
13	5900200159	*Deck expansion handle assembly - 5900200159* (page 171)	2
14	5900370022	Grommet, push-in locking 5/8" hole	4
15	5900340017	Screw, pan ph #8-unc x 0.3125	2
16	5900340114	Screw, plastite pan head ph #10-14 x 1/2" lg ZnPL	4
17	5900340081	Screw, flat Torx head 5/16-18 x 3/4 tri lobe zinc	4

Deck pan assembly, knee deck, patient right

5900200073 Rev A (Reference only)

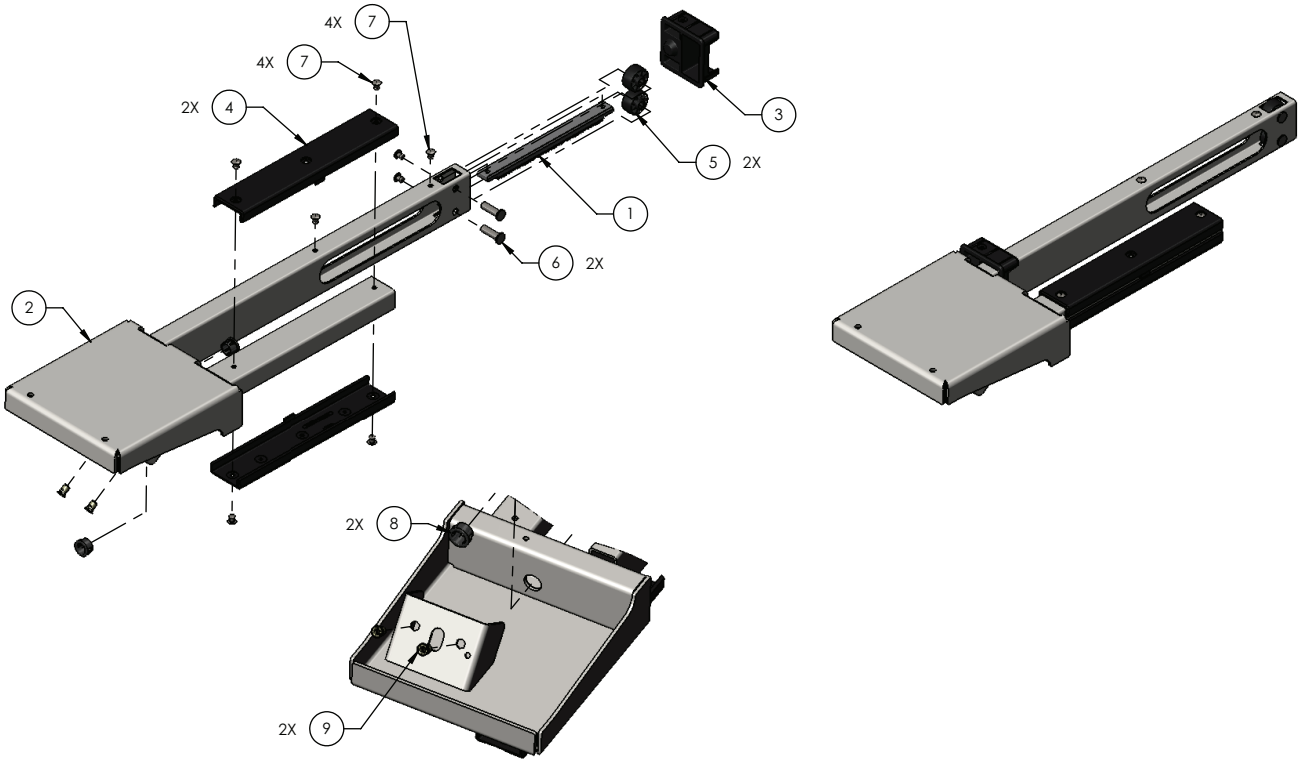

Item	Number	Name	Quantity
1	5900560011	Rack, expandable deck	1
2	5900240047	Pan weldment, knee deck, patient right	1
3	5900600006	Bearing, expandable deck guide	1
4	5900600050	Bearing, slide knee deck	2
5	5900600034	Roller, expandable deck	2
6	5900500028	Pin, expandable deck roller	2
7	0025-079-000	Rivet, 3/16 domed sst	8
8	5900370022	Grommet, push-in locking 5/8” hole	2
9	5900310020	Nutsert, #10-UNF thick sheet hex body-zinc	2

Deck pan assembly, knee deck, patient left

5900200072 Rev A (Reference only)

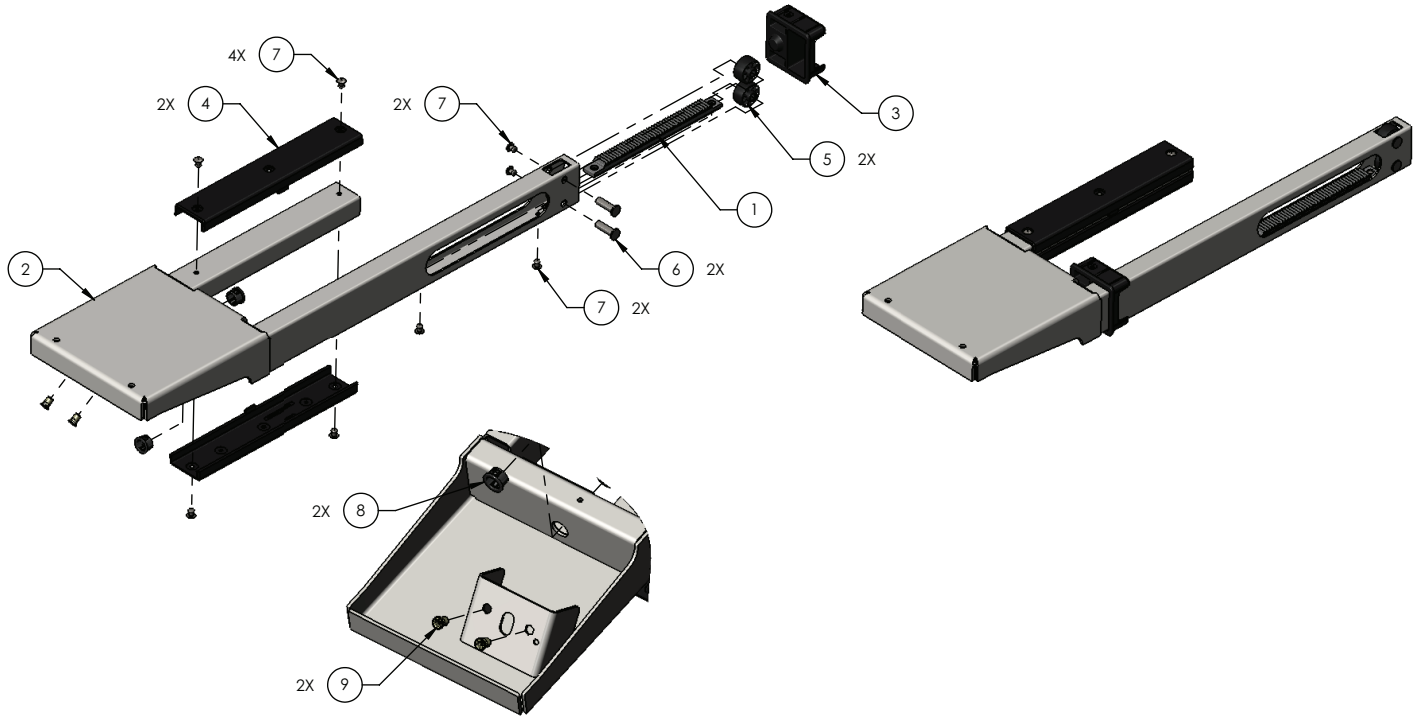

Item	Number	Name	Quantity
1	5900560011	Rack, expandable deck	1
2	5900240046	Pan weldment, knee deck, patient left	1
3	5900600006	Bearing, expandable deck guide	1
4	5900600050	Bearing, slide knee deck	2
5	5900600034	Roller, expandable deck	2
6	5900500028	Pin, expandable deck roller	2
7	0025-079-000	Rivet, 3/16 domed sst	8
8	5900370022	Grommet, push-in locking 5/8” hole	2
9	5900310020	Nutsert, #10-UNF thick sheet hex body-zinc	2

Deck assembly, foot section

5900200057 Rev G (Reference only)

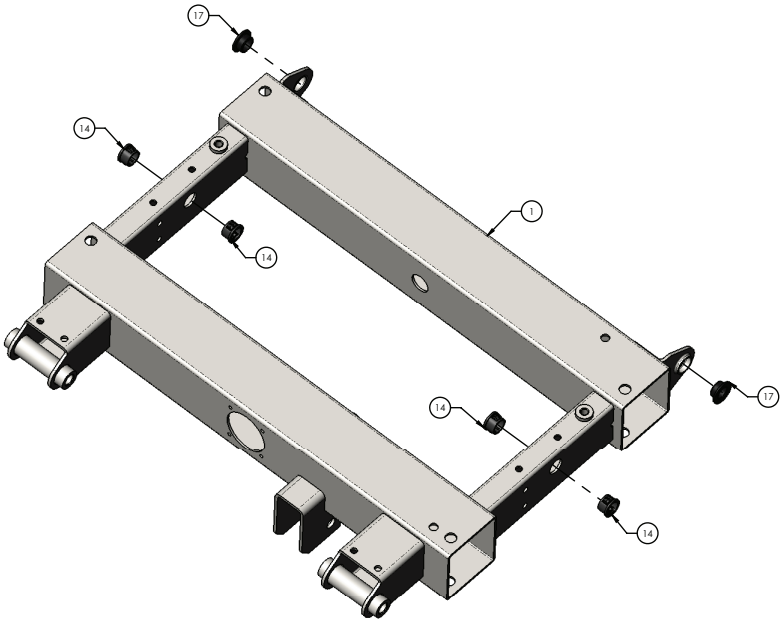

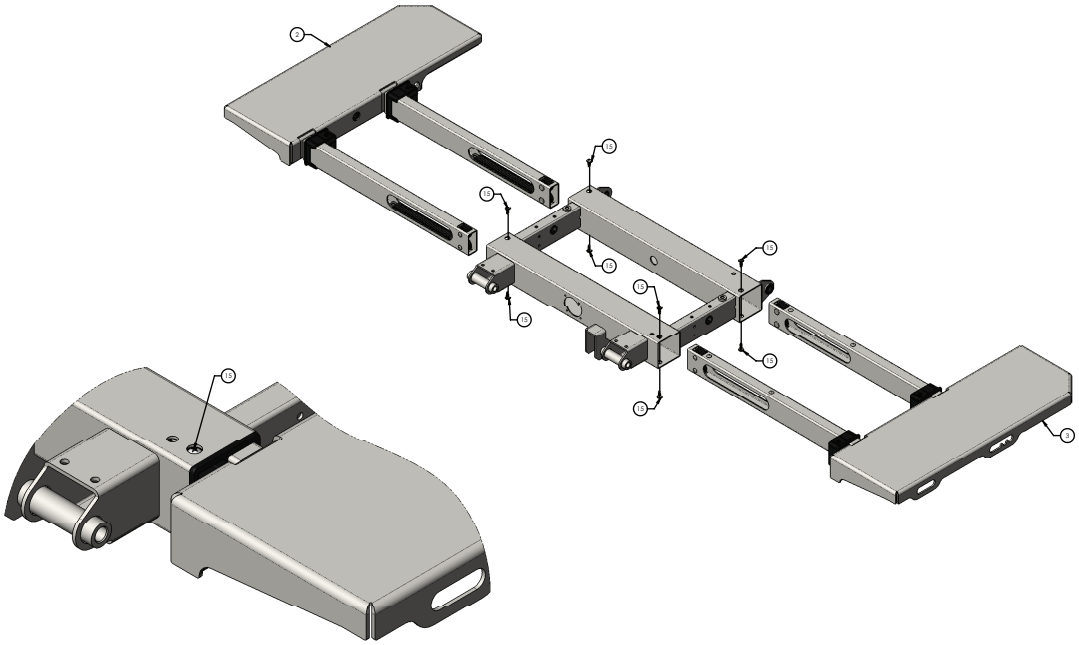

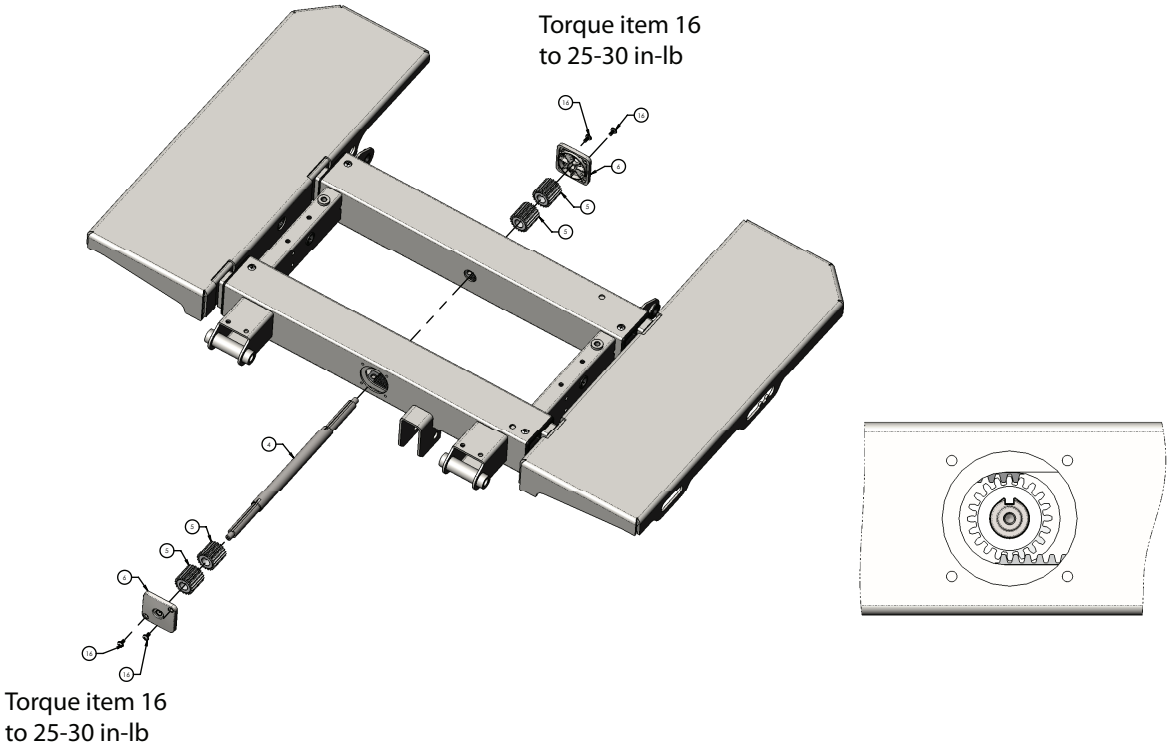
Torque item 16
to 25-30 in-lb
Torque item 16
to 25-30 in-lb

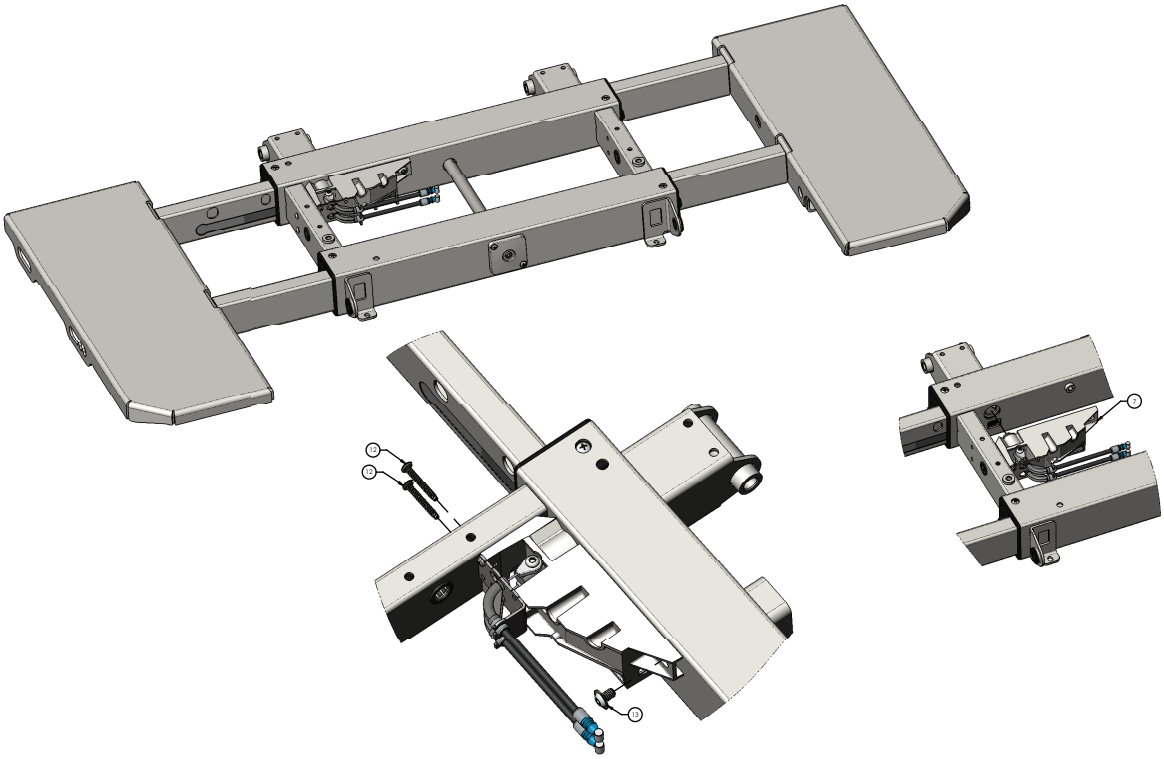

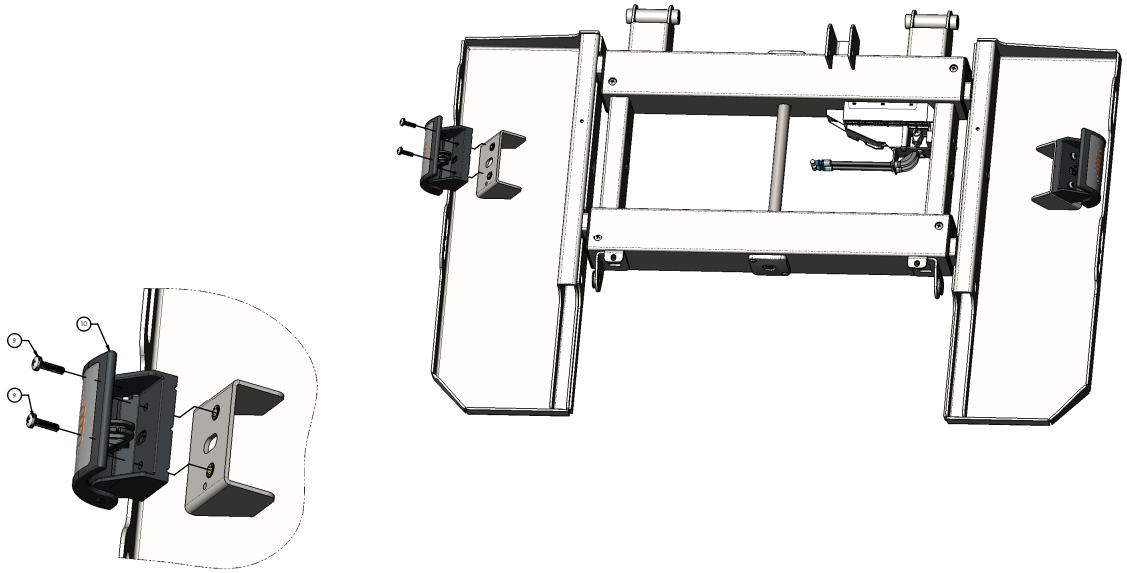

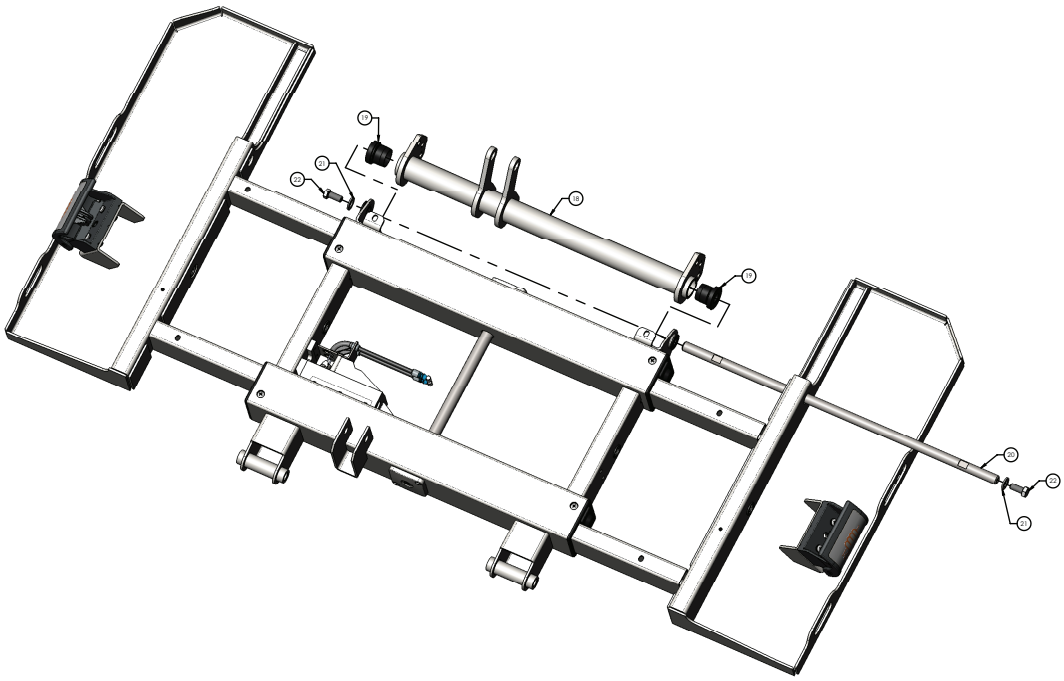

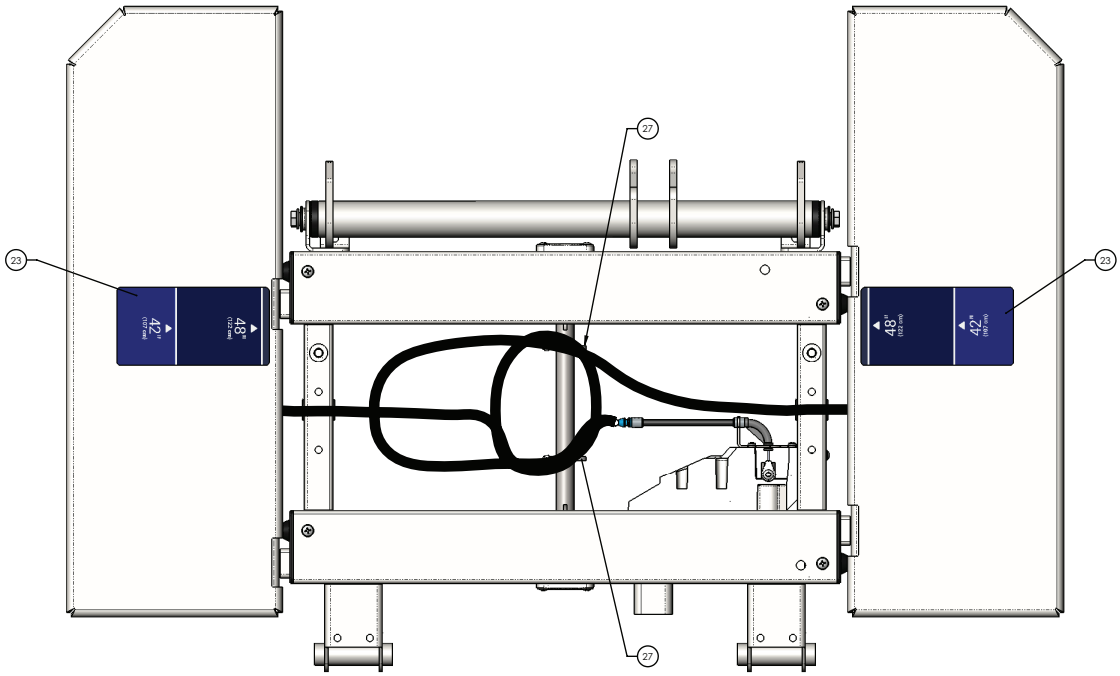
23
42"
(107.2cm)
48"
(121.9cm)
27
27
48"
(121.9cm)
42"
(107.2cm)
23

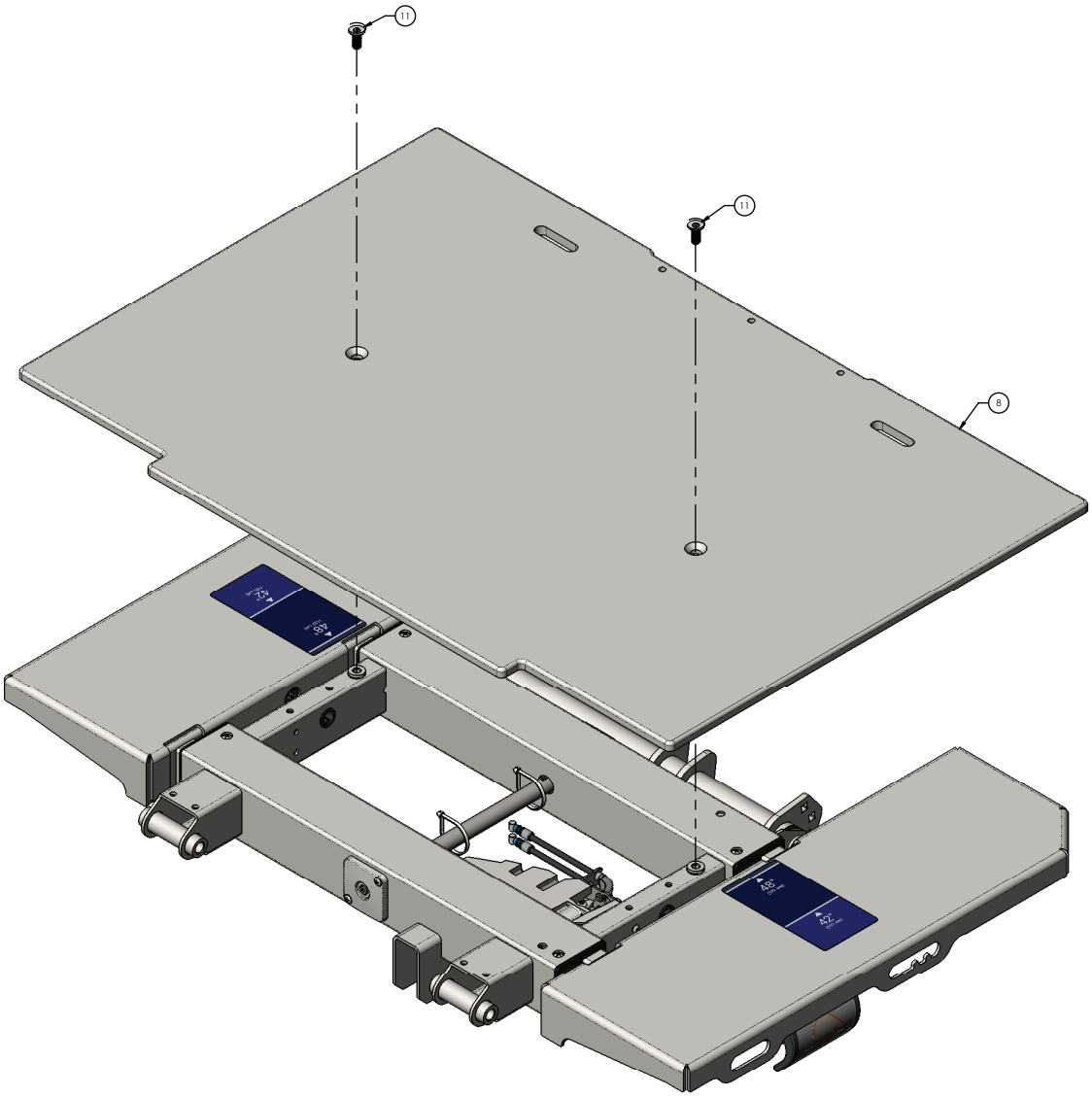
11
11
8

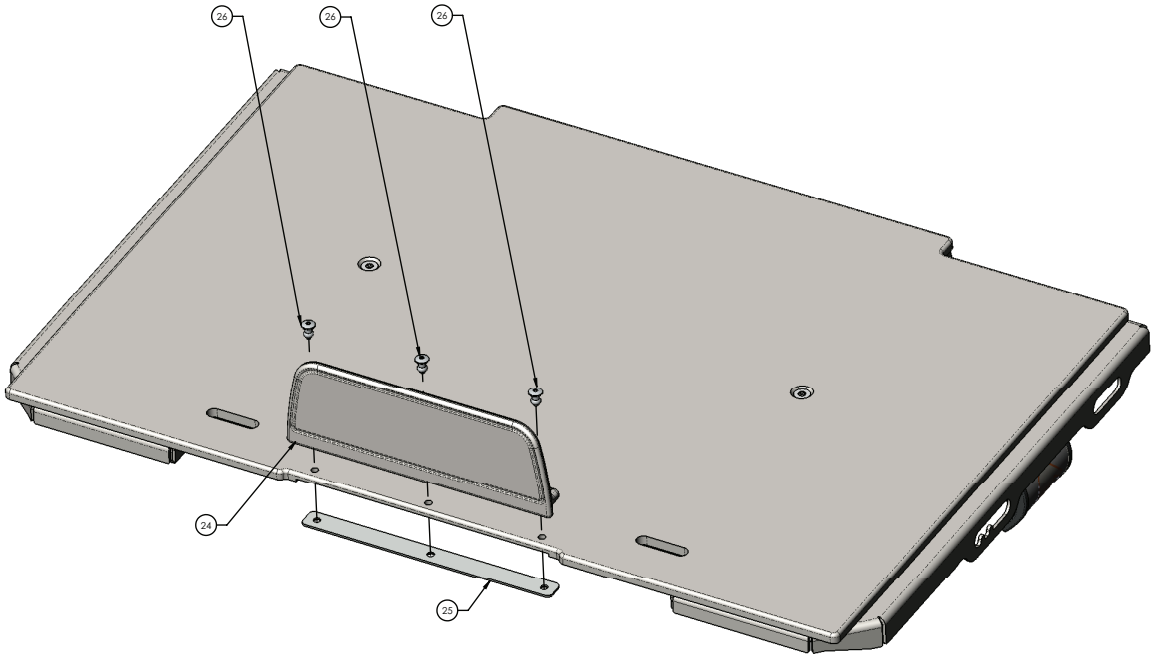

Item	Number	Name	Quantity
1	5900240106	Deck weldment, foot section	1
2	5900200074	*Deck pan assembly, foot deck, patient left* (page 167)	1
3	5900200075	*Deck pan assembly, foot deck, patient right* (page 166)	1
4	5900500040	Pinion shaft, foot deck	1
5	5900560003	Pinion gear, expandable deck	4
6	5900600007	Bushing, pinion shaft cover	2
7	5900200153	*Foot deck position lock assembly - 5900200153* (page 168)	1
8	5900620009	Cover, foot deck	1
9	5900340090	Screw, sems pan ph #10-32UNF x 3/4LG int wash zinc	4
10	5900200159	*Deck expansion handle assembly - 5900200159* (page 171)	2
11	5900340081	Screw, flat Torx head 5/16-18 x 3/4 tri lobe zinc	2
12	5900340105	Screw, plastite pan head Torx #8-16 x 1.25”LG zinc	2
13	5900340101	Screw, rd hd flg hex drive 1/4-UNC x 3/8LG zinc	1
14	5900370022	Grommet, push-in locking 5/8” hole	4
15	5900340114	Screw, plastite pan head PH #10-14 x 1/2” LG ZnPL	8
16	5900340017	Screw, pan ph #8-UNC x 0.3125	4
17	5900330020	Bushing, flg 0.500X0.625X0.313LG (flg 0.875X0.062)	2

Item	Number	Name	Quantity
18	5900240107	Gatch weldment, foot bail	1
19	5900620026	Bushing, timing link	2
20	5900500167	Pivot rod, foot bail	1
21	0011-003-000	Washer, plain 5/16 x 0.688 ap	2
22	8839-793-700	Screw, hxcap 5/16-UNC x 0.75	2
23	5900690076	Label, indicator deck width	2
24	5900600036	Mattress keeper, long	1
25	5900540279P	Backing plate, foot end mattress keeper plated	1
26	0025-120-000	Rivet, 1/4 x 0.600” lg blind alum	3
27	3000-300-113	Cable tie, nylon 8” lg	2

Deck pan assembly, foot deck, patient right

5900200075 Rev A (Reference only)

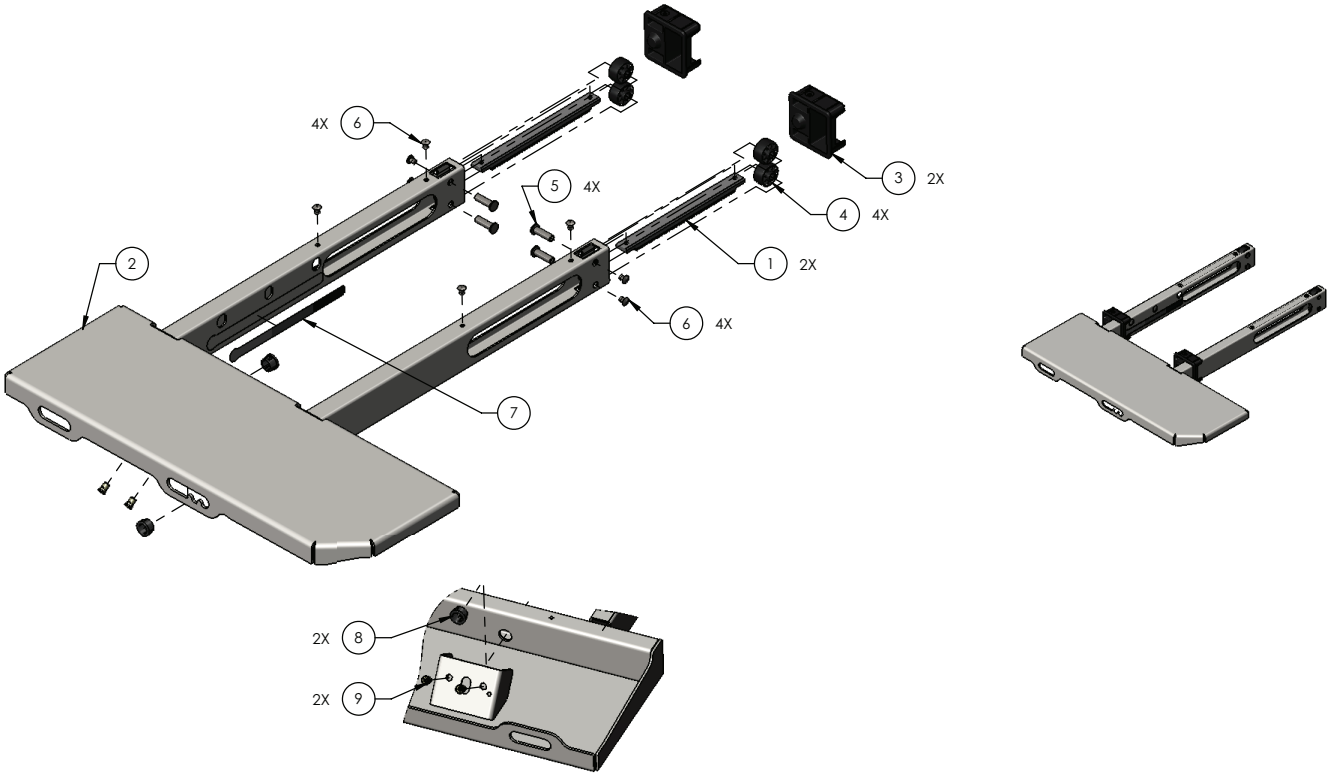

Item	Number	Name	Quantity
1	5900560011	Rack, expandable deck	2
2	5900240051	Pan weldment, foot deck, patient right	1
3	5900600006	Bearing, expandable deck guide	2
4	5900600034	Roller, expandable deck	4
5	5900500028	Pin, expandable deck roller	4
6	0025-079-000	Rivet, 3/16 domed sst	8
7	5900690050	Decal, deck lock position sensor	1
8	5900370022	Grommet, push-in locking 5/8” hole	2
9	5900310020	Nutsert, #10-UNF thick sheet hex body-zinc	2

Deck pan assembly, foot deck, patient left

5900200074 Rev A (Reference only)

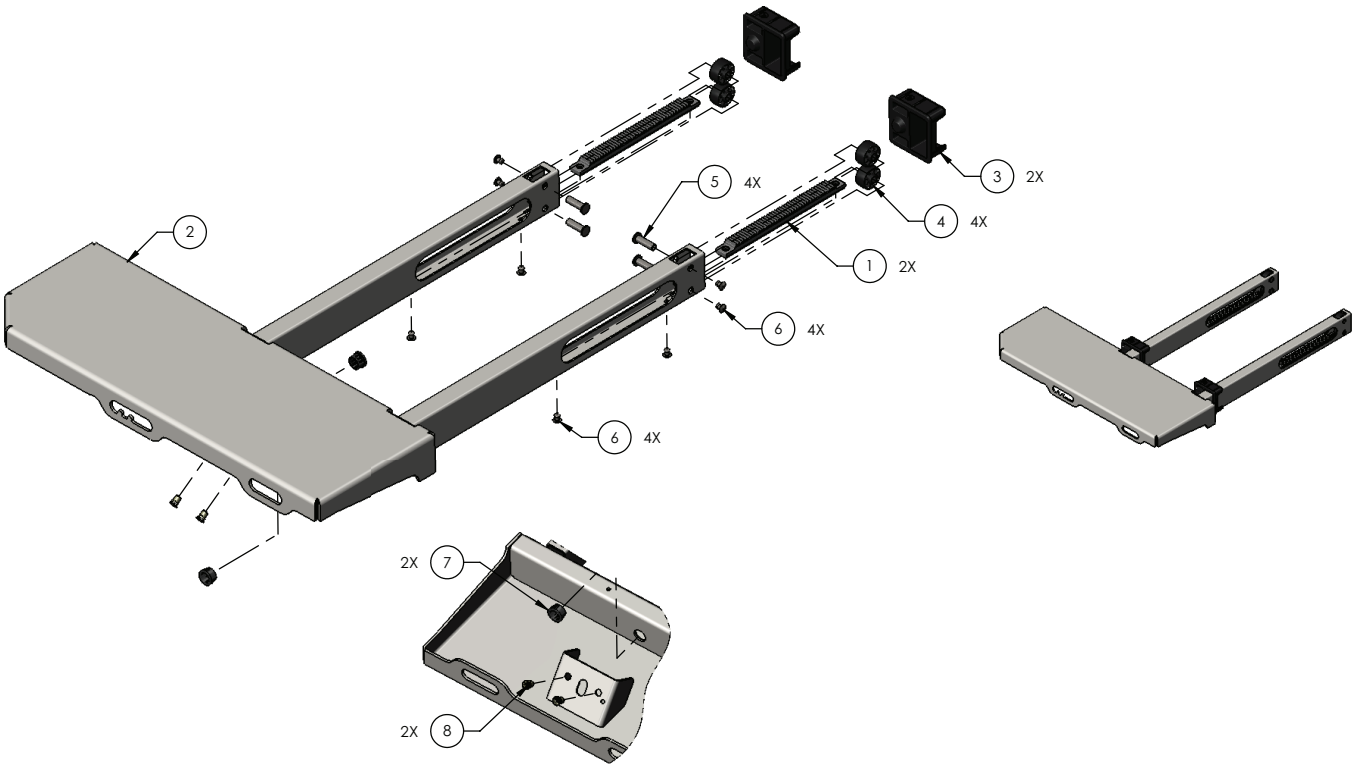

Item	Number	Name	Quantity
1	5900560011	Rack, expandable deck	2
2	5900240050	Pan weldment, foot deck, patient left	1
3	5900600006	Bearing, expandable deck guide	2
4	5900600034	Roller, expandable deck	4
5	5900500028	Pin, expandable deck roller	4
6	0025-079-000	Rivet, 3/16 domed sst	8
7	5900370022	Grommet, push-in locking 5/8” hole	2
8	5900310020	Nutsert, #10-UNF thick sheet hex body-zinc	2

Foot deck position lock assembly - 5900200153

Rev A (Reference only)

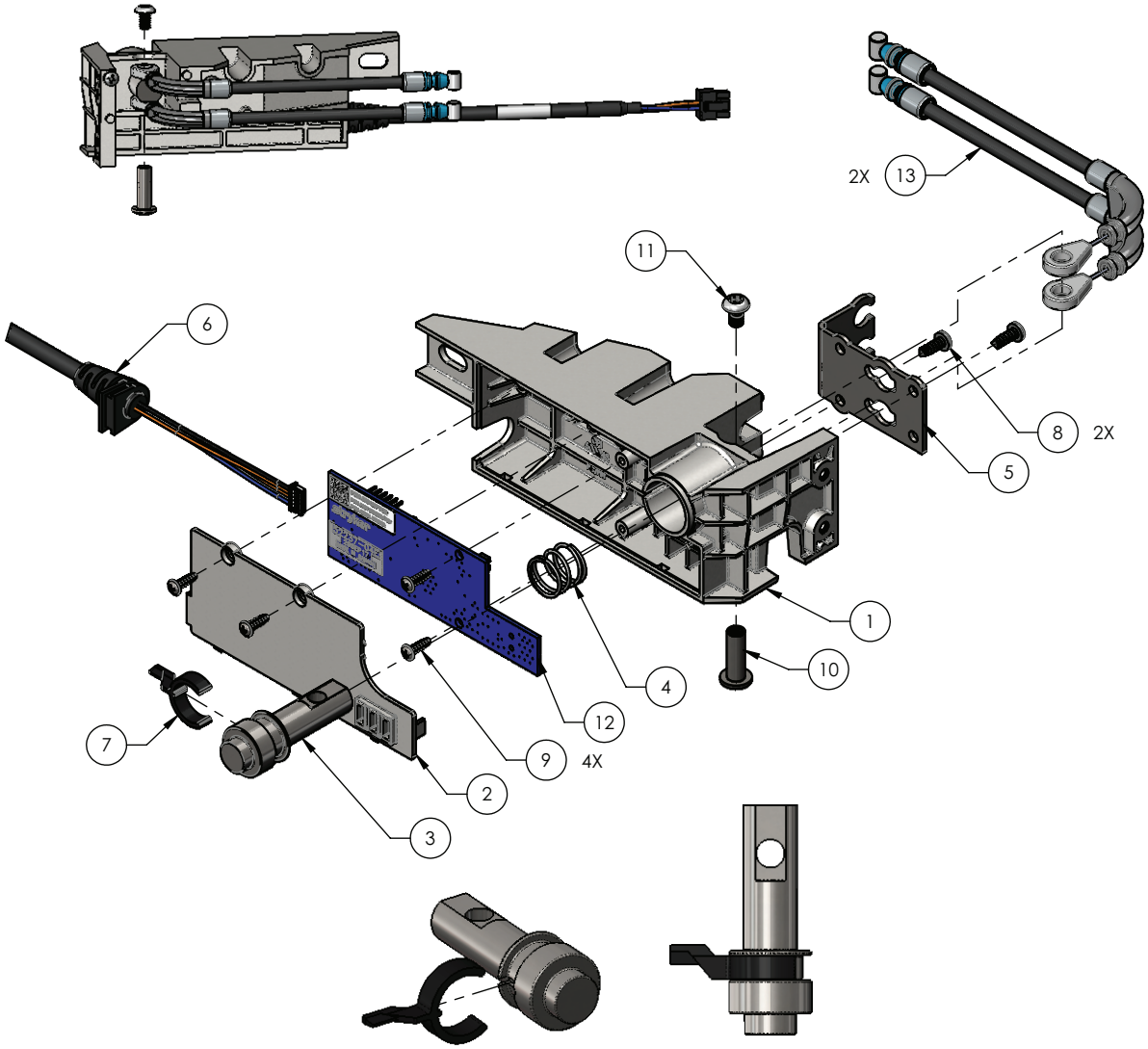

Item	Number	Name	Quantity
1	5900600048	Housing, deck lock/position sensor	1
2	5900600049	Cover, deck lock/sensor housing	1
3	5900500033	Pin, deck lock	1
4	5900370017	Spring, compression deck lock	1
5	5900520100	Plate, deck lock cable mount	1
6	5900430160	HRNS, deck lock/position snsr foot deck	1
7	5900600053	Arm, deck lock sensor plunger	1
8	5900340009	Screw, pan ph #6-unc x 0.375 tri lobe	2
9	5900340018	Screw, #4-20 tri-lobular 3/8lg	4
10	5900370018	Binding barrel, 10-24 x 3/4lg zinc plated	1
11	0004-665-000	Screw, bhcs #10-unc x 0.313 w/patch	1

Item	Number	Name	Quantity
12	590040004103	PCBA, iom deck pos mon foot	1
13	5900370011	Cable, deck extend push/pull	2

Expandable deck wire guide assembly - 5900200158

Rev C (Reference only)

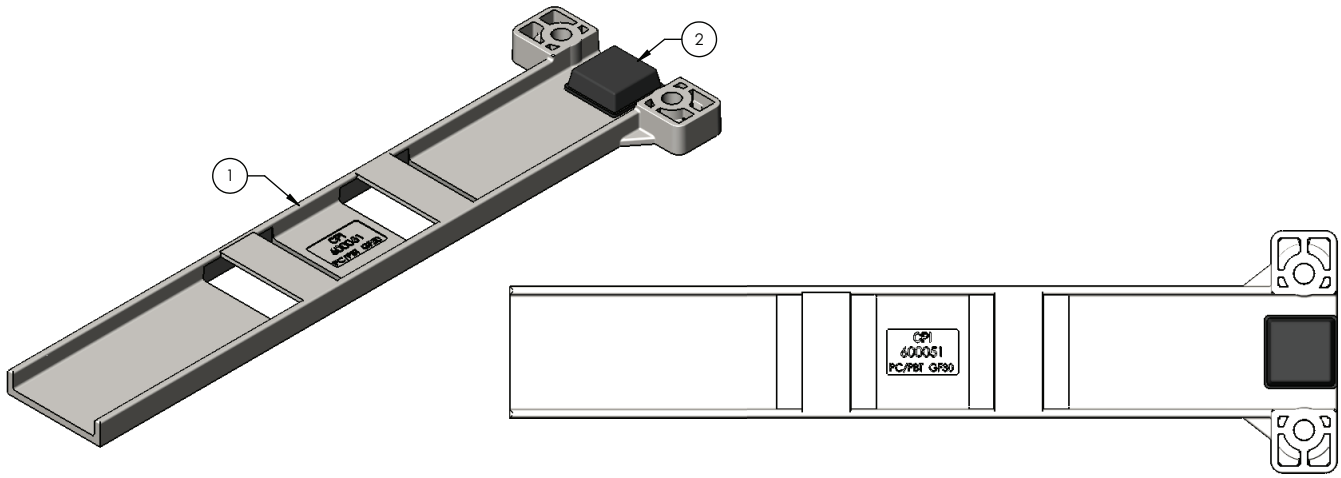

Item	Number	Name	Quantity
1	5900600051	Wire guide, expandable deck	1
2	5900370043	Bumper, adhesive 3/4”sq x 1/4” high polyurethane	1

Deck expansion handle assembly - 5900200159

Rev A (Reference only)

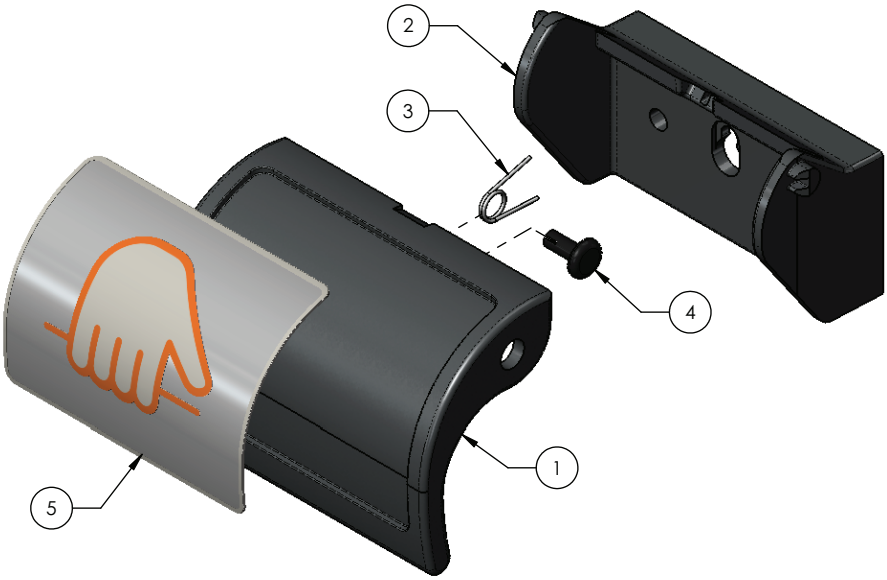

Item	Number	Name	Quantity
1	5900600084	Handle, deck expansion	1
2	5900600086	Backplate, handle	1
3	5900370109	Spring, torsion CPR pull handle	1
4	5900370107	Snap rivet, dia .170 hole x .250 panel thk	1
5	5900690081	Badge, deck width activation handle	1

Rail assembly, head

5900200130 Rev E (right) (Reference only)

5900200131 Rev E (left) (Reference only)

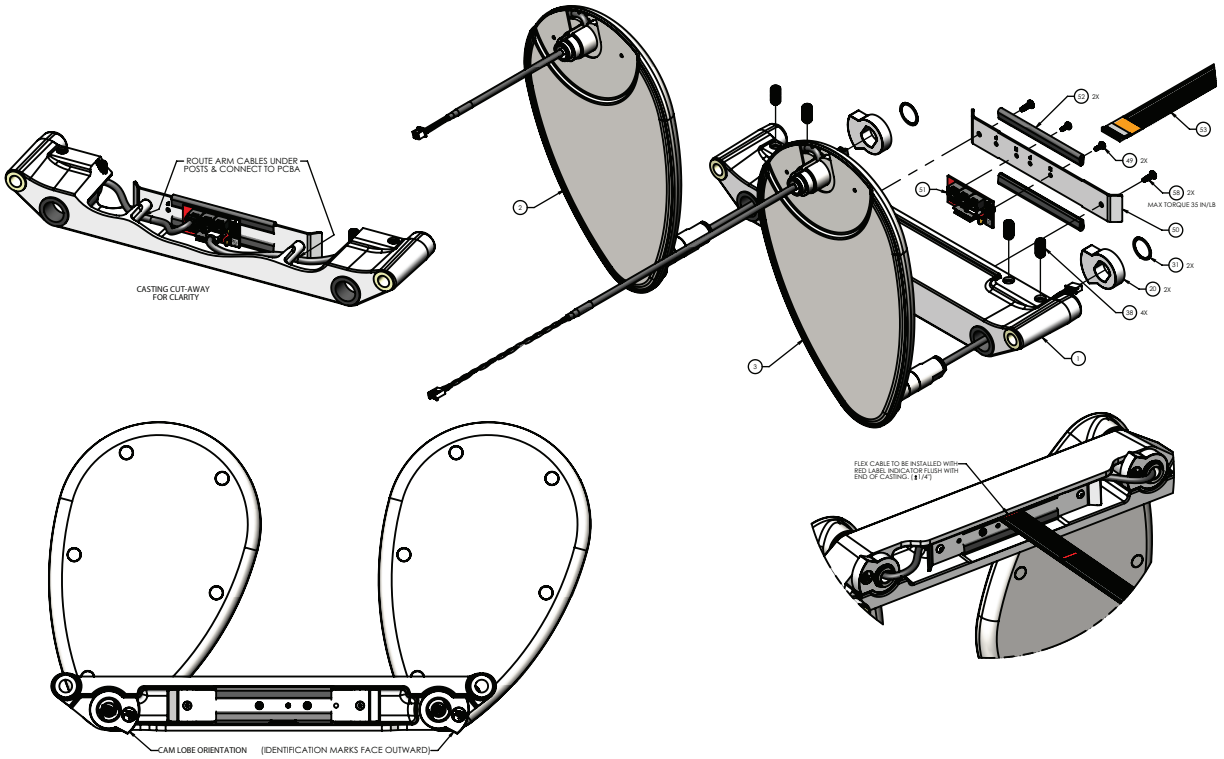

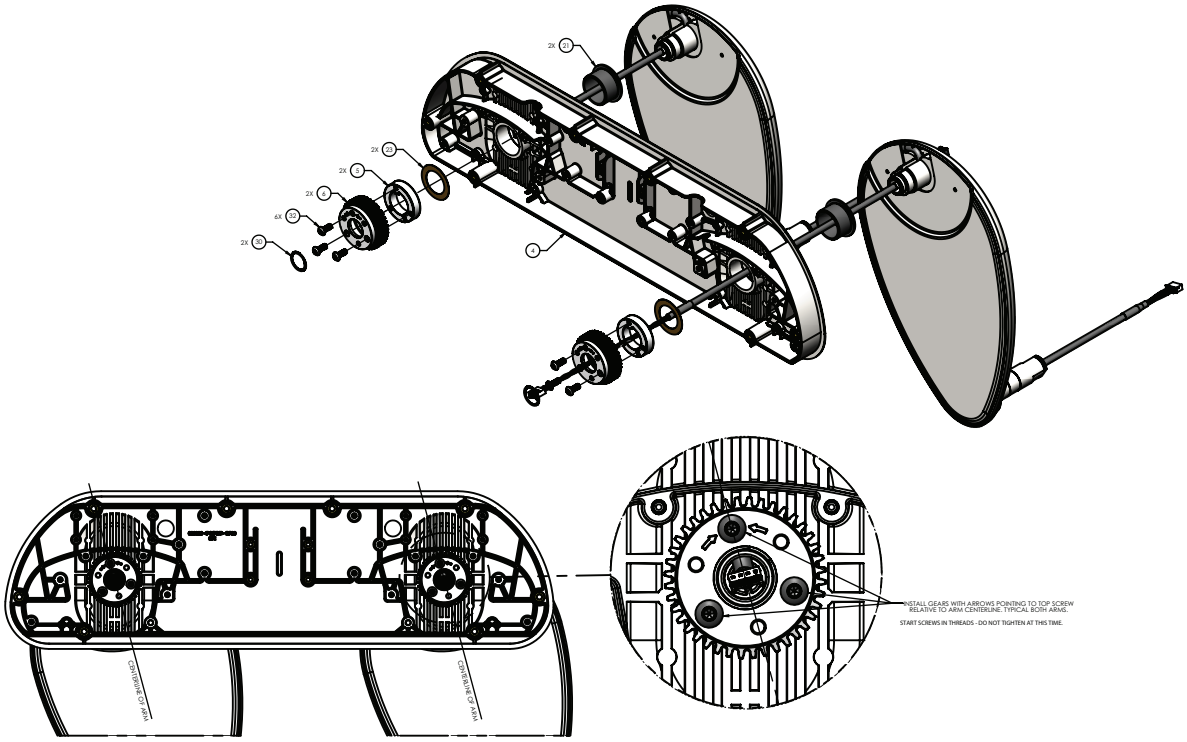

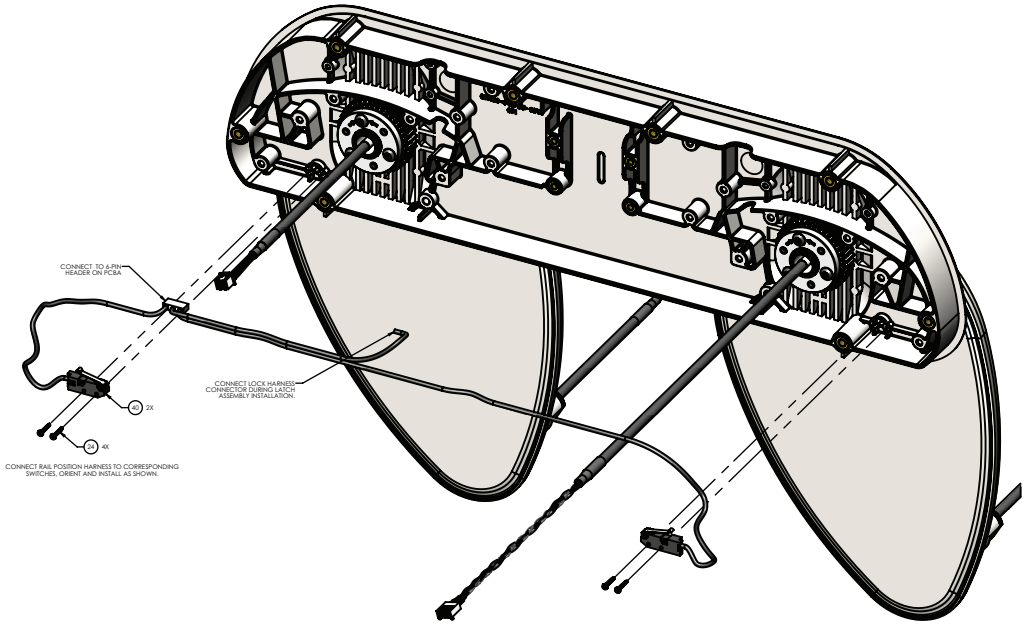
CONNECT TO 6-PIN HEADER ON PCBA
CONNECT LOCK HARNESS CONNECTOR DURING LATCH ASSEMBLY INSTALLATION.
40 2X
26 4X
CONNECT RAIL POSITION HARNESS TO CORRESPONDING SWITCHES. ORIENT AND INSTALL AS SHOWN.

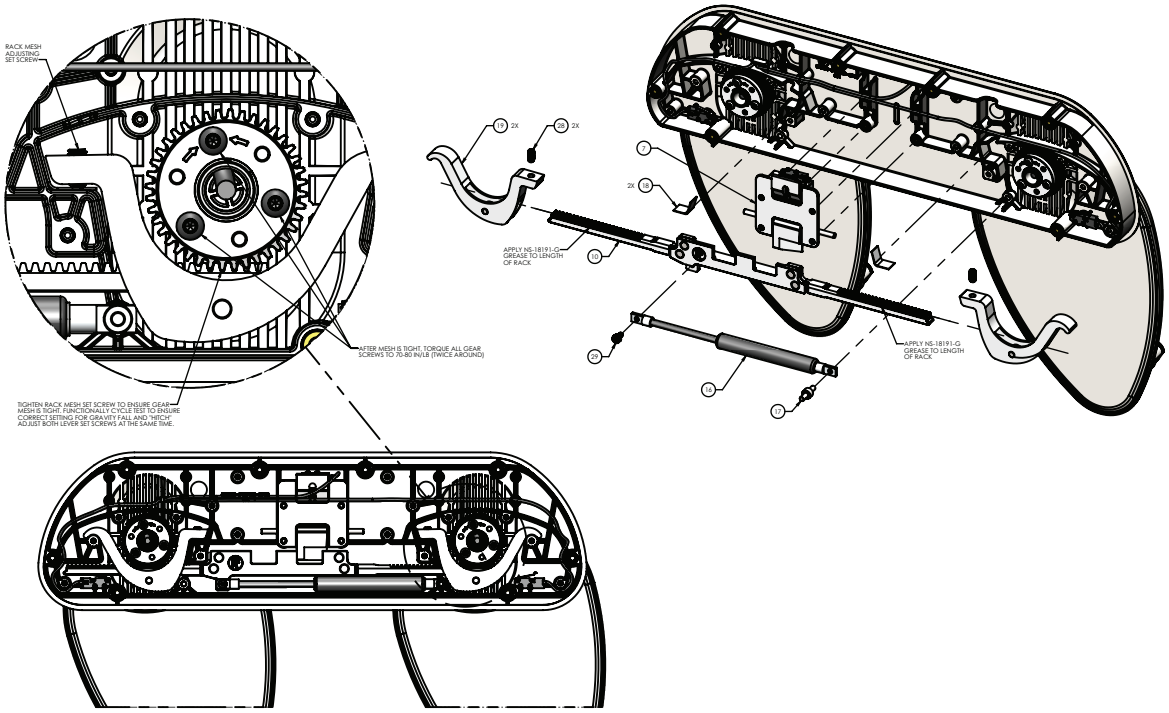
RACK MESH ADJUSTING SET SCREW
AFTER MESH IS TIGHT, TORQUE ALL GEAR SCREWS TO 70-80 IN/LB (TWICE AROUND)
TIGHTEN RACK MESH SET SCREW TO ENSURE GEAR MESH IS TIGHT. FUNCTIONALLY CYCLE TEST TO ENSURE CORRECT SETTING FOR GRAVITY FALL AND 'HITCH'. ADJUST BOTH LEVER SET SCREWS AT THE SAME TIME.
19 2X
20 2X
7
2X 18
APPLY NS-18191-G GREASE TO LENGTH OF RACK.
15
APPLY NS-18191-G GREASE TO LENGTH OF RACK.
25
14
17

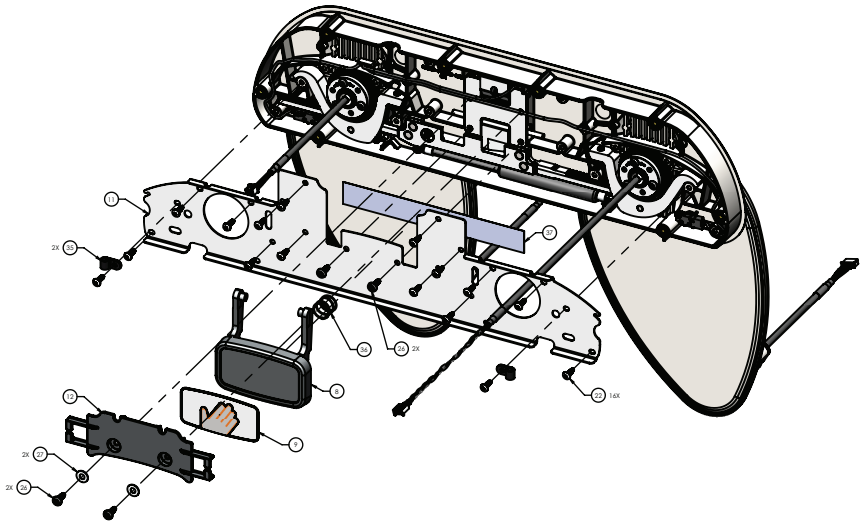

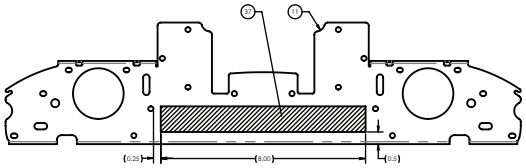

PLACE TAPE APPROXIMATELY AS SHOWN ON BACKPLATE

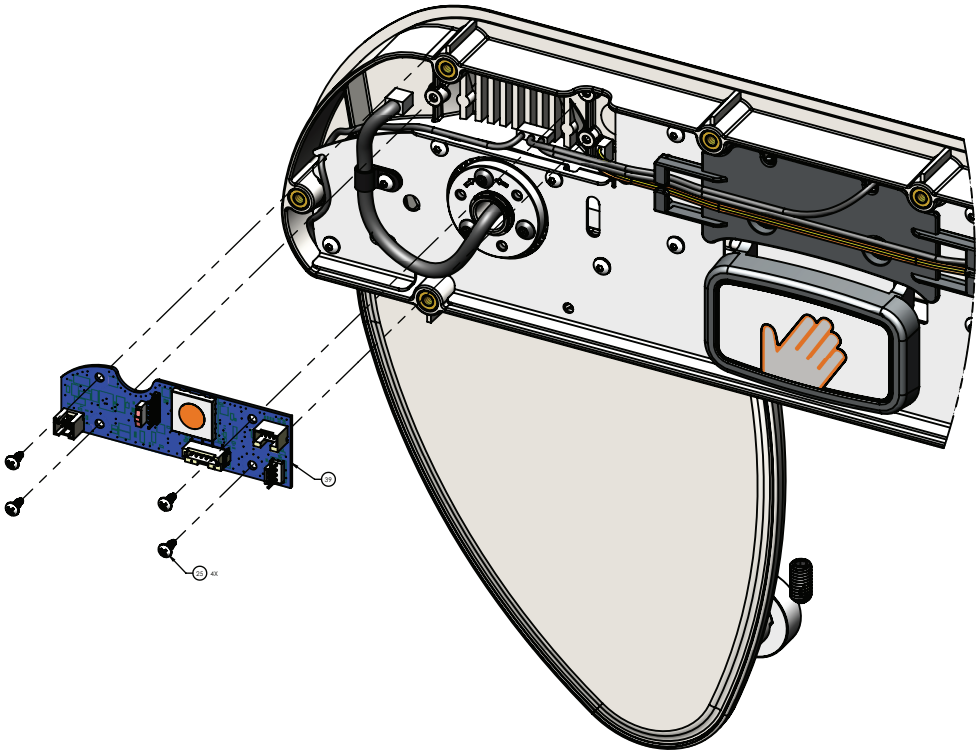

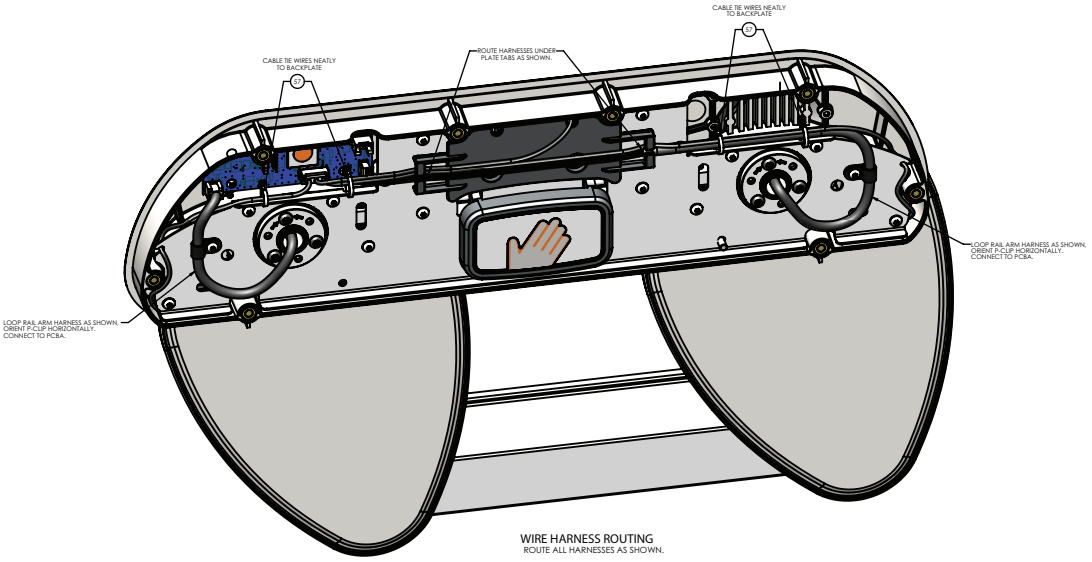

WIRE HARNESS ROUTING
ROUTE ALL HARNESSES AS SHOWN.

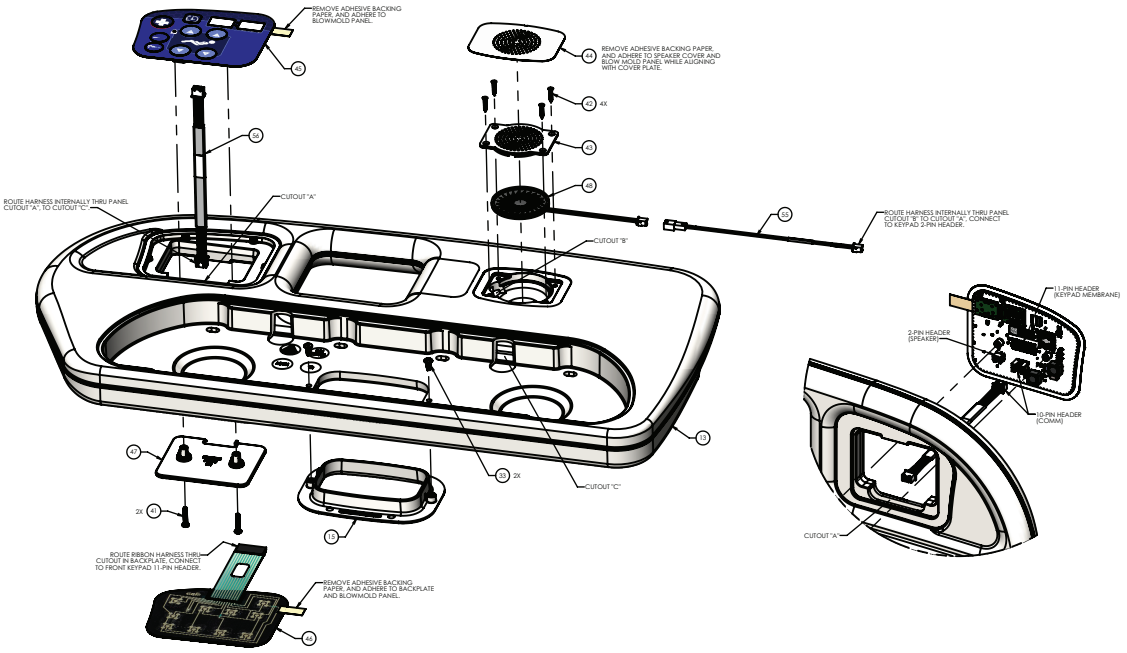

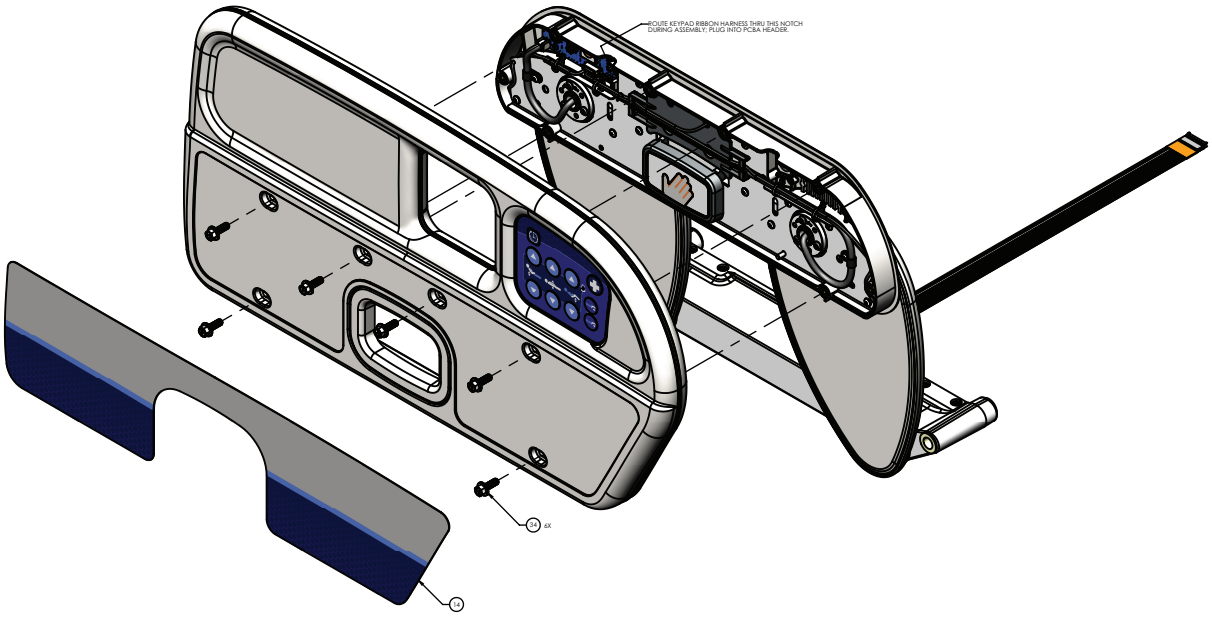

Rail assembly, head 5900200130 Rev E (Reference only)			
Item	**Number**	**Name**	**Quantity**
1	5900200047	*Bracket assembly, lower rail slide* (page 190)	1
2	5900200061	*Rail arm assembly, power/communication* (page 180)	1
3	5900200062	*Rail arm assembly, nurse call/speaker* (page 181)	1
4	5900600026	Backplate, upper rail C/W inserts	1
5	5900560005	Bushing, 1” taper lock	2
6	5900560030	Sprocket, 20DP 14.5PA 40th taper lock	2
7	5900200024	Latch lock assembly-RH/LF	1
8	5900600029	Handle-rail push	1
9	5900690066	Badge, siderail push handle	1
10	5900200154	Rail gear rack assembly, RH/LF	1
11	5900540057P	Cover, upper rail backplate plated	1
12	5900600032	Cover, upper rail latch	1
13	5900650005	Rail panel, rack drive-PR	1
14	5900690058	Overlay, head rail, outboard PR	1
15	5900600028	Bezel, upper rail pull handle	1
16	5900200028	Hydraulic damper sub assembly	1
17	5900500037	Pin, damper mount stud	1
18	5900370032	Flatform, rail-load distribution plate	2
19	5900200083	Lever, alum rail arm rack drive preload assembly	2
20	5900560021	Rail arm cam stop-HR/FL	2
21	5900330009	Bushing, FLG 1.125x1.281x0.750LG (FLG 1.562x0.078)	2
22	5900340074	Screw, plastite pan head Torx #8-16 x 1/2” LG zinc	16
23	5900370005	Shim, 1.00 ID x 1.50 OD x 0.010 THK	2
24	5900340012	Screw, pan PH M1.91 x 12mm tri lobe	4
25	5900340008	Screw, pan PH #6-UNC x 0.313 HI-LO	4

Rail assembly, head 5900200130 Rev E (Reference only)			
Item	**Number**	**Name**	**Quantity**
26	5900340073	Screw, BH Torx #10-24 UNC x 0.50 tri lobe	4
27	0011-302-000	Washer, type A SAE #10 screw, Ø7/32 ID x Ø1/2 OD	2
28	5900340075	Set screw, 1/4-UNC x 0.50 non-mar nylon patch	2
29	5900340015	Screw, SHLDR 3/16 x 0.125-#8-UNC	1
30	5900350010	Ring, spirolox rtng ext 0.750 SST	2
31	5900350011	Ring, spirolox rtng ext 0.875 SST	2
32	0004-634-000	Screw, BHCS #10-UNF x 0.500	6
33	5900340010	Screw, pan PH #8-UNC x 0.375 tri lobe	2
34	5900340086	Screw, serrated hex FLG 1/4-UNC x 0.75LG zinc	6
35	5900350022	Clamp, P-clip 1/4” nylon loop-black	2
36	5900370108	Latch pin spring	1
37	5900370068	Tape, wear-resistant UHMW 1”W x 0.005”THK x 8.0”LG	1
38	5900340076	Set screw, 3/8-UNC x 0.75 non-mar nylon patch	4
39	590040004202	PCBA, IOM SRC HD PR	1
40	5900410002	Switch, SPST-N/O omron D3M-01K3-3	2
41	0050-039-000	Screw, pan head PH 6-32 x 3/4” LG zinc PL	2
42	5900340042	Screw, flat head #4 x 5/8” LG zinc PL	4
43	5900600047	Bezel, speaker Ø57mm	1
44	5900690014	Overlay, speaker grill Ø57mm	1
45	5900470018	Keypad, siderail PR inboard STD	1
46	5900470025	Keypad, siderail PR outboard STD	1
47	5900600045	Back plate, siderail keypad	1
48	5900280009	Ø57mm mylar speaker assembly	1
49	5900340071	Screw, sems pan PH #6-32x3/8LG int wash zinc PL	2
50	5900520067P	Cover, lower rail casting plated	1
51	5900400051	PCBA, JCTN HD/FT PL-IN/PR-OUT	1
52	5900370025	Rubber edge trim	2
53	5900430146	HRNS, flat flex cable shielded short	1
54	5900430156	HRNS, SRC rail position	1
55	5900430044	HRNS, speaker jumper	1
56	5900430036	HRNS, siderail keypad control	1
57	3000-300-114	Cable tie, nylon 4” LG	4
58	5900340122	Screw, Taptite pan head Torx #8-32 x 1/2” LG zinc	2

Rail assembly, head 5900200131 Rev E (Reference only)			
Item	**Number**	**Name**	**Quantity**
1	5900200047	*Bracket assembly, lower rail slide* (page 190)	1
2	5900200061	*Rail arm assembly, power/communication* (page 180)	1
3	5900200062	*Rail arm assembly, nurse call/speaker* (page 181)	1
4	5900600026	Backplate, upper rail C/W inserts	1
5	5900560005	Bushing, 1” taper lock	2
6	5900560030	Sprocket, 20DP 14.5PA 40th taper lock	2
7	5900200023	Latch lock assembly-LH/RF	1

Rail assembly, head 5900200131 Rev E (Reference only)			
Item	**Number**	**Name**	**Quantity**
8	5900600029	Handle-rail push	1
9	5900690066	Badge, siderail push handle	1
10	5900200155	Rail gear rack assembly, LH/RF	1
11	5900540057P	Cover, upper rail backplate plated	1
12	5900600032	Cover, upper rail latch	1
13	5900650006	Rail panel, rack drive-patient head L	1
14	5900690059	Overlay, head rail, outboard PL	1
15	5900600028	Bezel, upper rail pull handle	1
16	5900200028	Hydraulic damper sub assembly	1
17	5900500037	Pin, damper mount stud	1
18	5900370032	Flatform, rail-load distribution plate	2
19	5900200083	Lever, alum rail arm rack drive preload assembly	2
20	5900560022	Rail arm cam stop-HL/FR	2
21	5900330009	Bushing, FLG 1.125x1.281x0.750LG (FLG 1.562x0.078)	2
22	5900340074	Screw, plastite pan head Torx #8-16 x 1/2” LG zinc	16
23	5900370005	Shim, 1.00 ID x 1.50 OD x 0.010 THK	2
24	5900340012	Screw, pan PH M1.91 x 12mm tri lobe	4
25	5900340008	Screw, pan PH #6-UNC x 0.313 HI-LO	4
26	5900340073	Screw, BH Torx #10-24 UNC x 0.50 tri lobe	4
27	0011-302-000	Washer, type A SAE #10 screw, Ø7/32 ID x Ø1/2 OD	2
28	5900340075	Set screw, 1/4-UNC x 0.50 non-mar nylon patch	2
29	5900340015	Screw, SHLDR 3/16 x 0.125-#8-UNC	1
30	5900350010	Ring, spirolox rtng ext 0.750 SST	2
31	5900350011	Ring, spirolox rtng ext 0.875 SST	2
32	0004-634-000	Screw, BHCS #10-UNF x 0.500	6
33	5900340010	Screw, pan PH #8-UNC x 0.375 tri lobe	2
34	5900340086	Screw, serrated hex FLG 1/4-UNC x 0.75LG zinc	6
35	5900350022	Clamp, P-clip 1/4” nylon loop-black	2
36	5900370108	Latch pin spring	1
37	5900370068	Tape, wear-resistant UHMW 1”W x 0.005”THK x 8.0”LG	1
38	5900340076	Set screw, 3/8-UNC x 0.75 non-mar nylon patch	4
39	590040004201	PCBA, IOM SRC HD PL	1
40	5900410002	Switch, SPST-N/O omron D3M-01K3-3	2
41	0050-039-000	Screw, pan head PH 6-32 x 3/4” LG zinc PL	2
42	5900340042	Screw, flat head #4 x 5/8” LG zinc PL	4
43	5900600047	Bezel, speaker Ø57mm	1
44	5900690014	Overlay, speaker grill Ø57mm	1
45	5900470019	Keypad, siderail PL inboard STD	1
46	5900470026	Keypad, siderail PL outboard STD	1
47	5900600045	Back plate, siderail keypad	1
48	5900280009	Ø57mm mylar speaker assembly	1
49	5900340071	Screw, sems pan PH #6-32x3/8LG int wash zinc PL	2
50	5900520067P	Cover, lower rail casting plated	1

Rail assembly, head 5900200131 Rev E (Reference only)			
Item	**Number**	**Name**	**Quantity**
51	5900400052	PCBA, JCTN HD/FT PL-OUT/PR-IN	1
52	5900370025	Rubber edge trim	2
53	5900430146	HRNS, flat flex cable shielded short	1
54	5900430156	HRNS, SRC rail position	1
55	5900430044	HRNS, speaker jumper	1
56	5900430036	HRNS, siderail keypad control	1
57	3000-300-114	Cable tie, nylon 4” LG	4
58	5900340122	Screw, Taptite pan head Torx #8-32 x 1/2” LG zinc	2

Rail arm assembly, power/communication

5900200061 Rev B (Reference only)

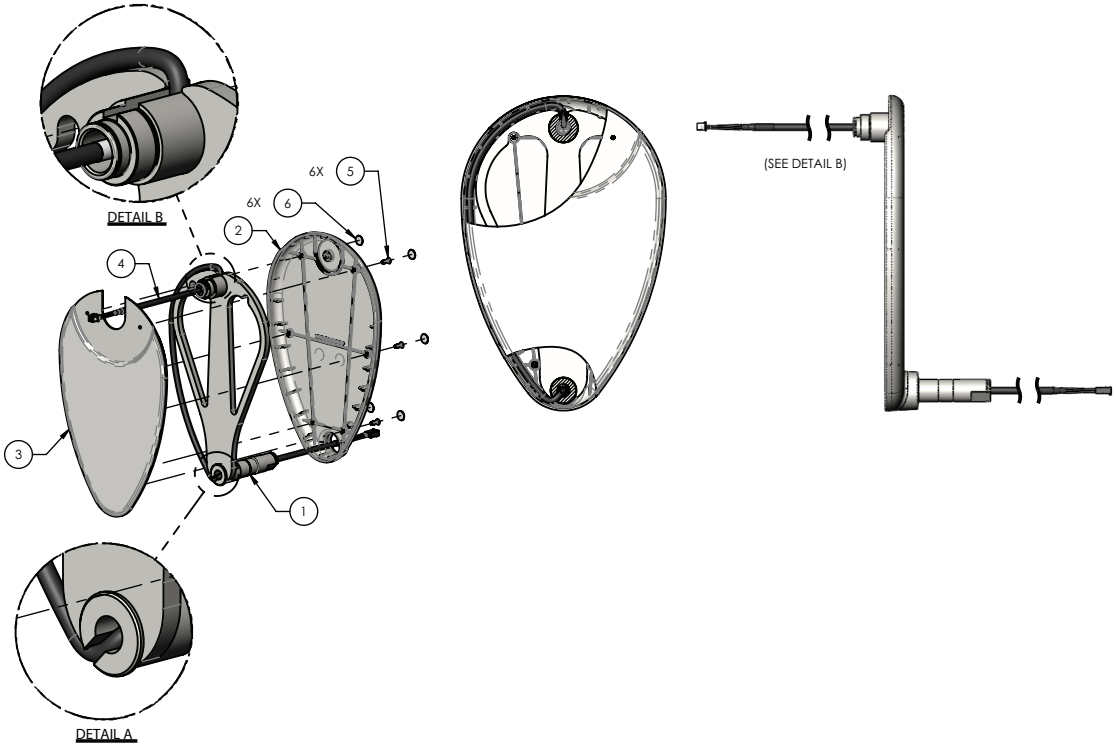

Item	Number	Name	Quantity
1	5900240028	Rail arm weldment	1
2	5900600008	Rail arm cover, inside	1
3	5900600009	Rail arm cover, outside	1
4	5900430059	HRNS, rail arm pwr/comm cable head and knee	1
5	5900340110	Screw, flat ph #8-UNC x 0.50 tri lobe	6
6	5900690009	Overlay, screw cover Ø1/2” white	6

Rail arm assembly, nurse call/speaker

5900200062 Rev B (Reference only)

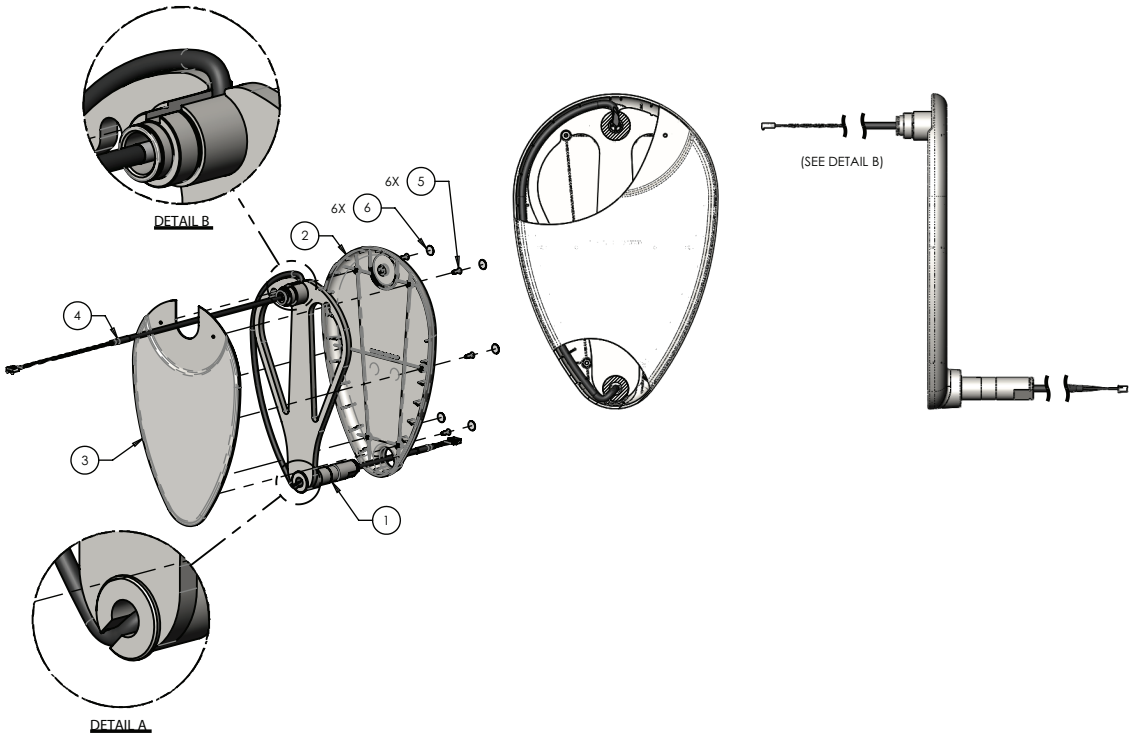

Item	Number	Name	Quantity
1	5900240028	Rail arm weldment	1
2	5900600008	Rail arm cover, inside	1
3	5900600009	Rail arm cover, outside	1
4	5900430060	HRNS, rail arm NC/spkr cable head	1
5	5900340110	Screw, flat ph #8-UNC x 0.50 tri lobe	6
6	5900690009	Overlay, screw cover Ø1/2” white	6

Rail assembly, foot

5900200132 Rev E (right) (Reference only)

5900200133 Rev E (left) (Reference only)

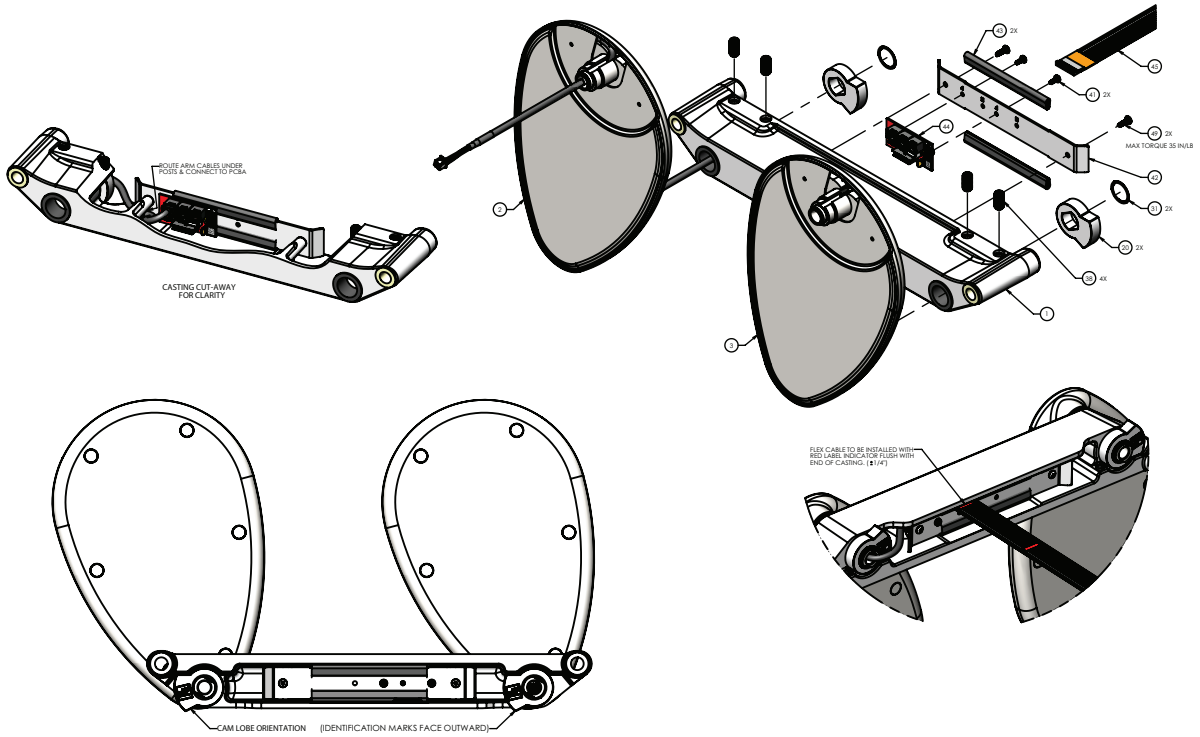

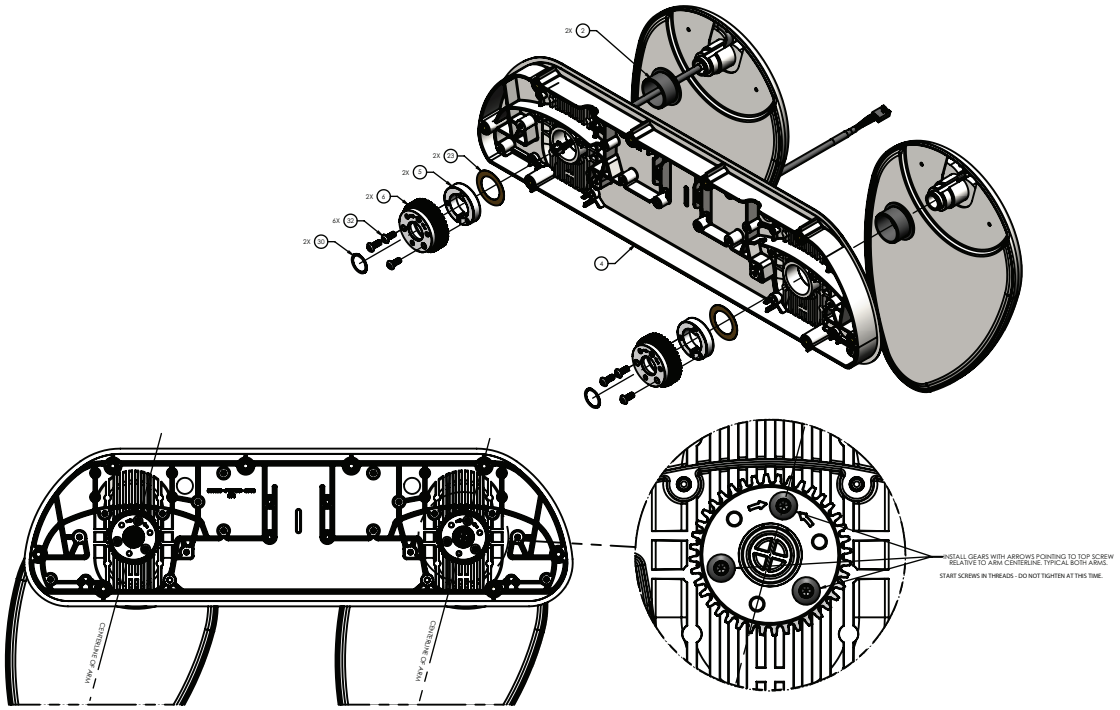

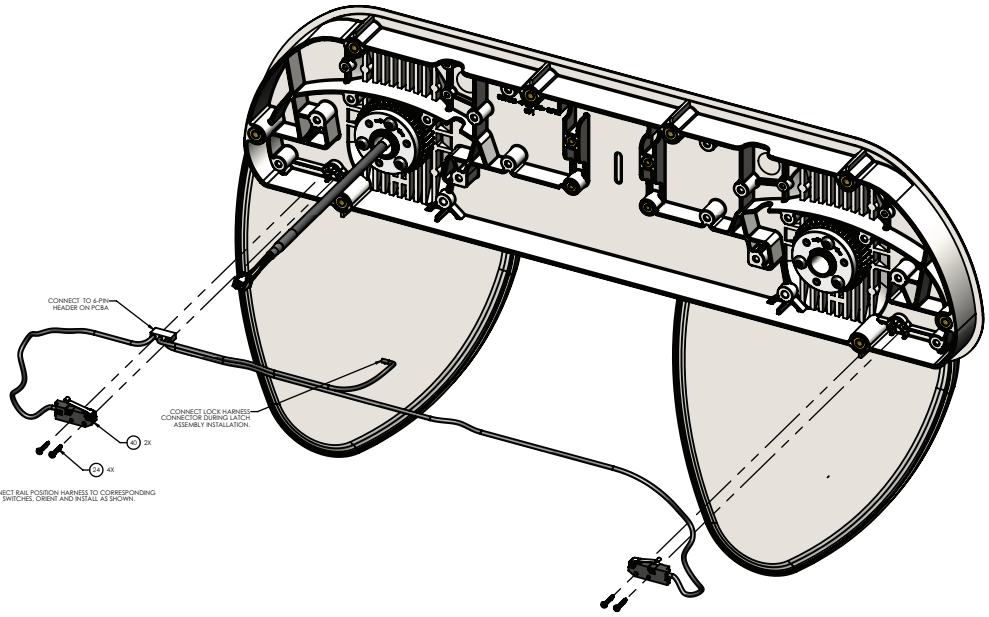
CONNECT TO 6-PIN HEADER ON PCBA
CONNECT LOCK HARNESS CONNECTOR DURING LATCH ASSEMBLY INSTALLATION.
2X
4X
CONNECT RAIL POSITION HARNESS TO CORRESPONDING SWITCHES, ORIENT AND INSTALL AS SHOWN.

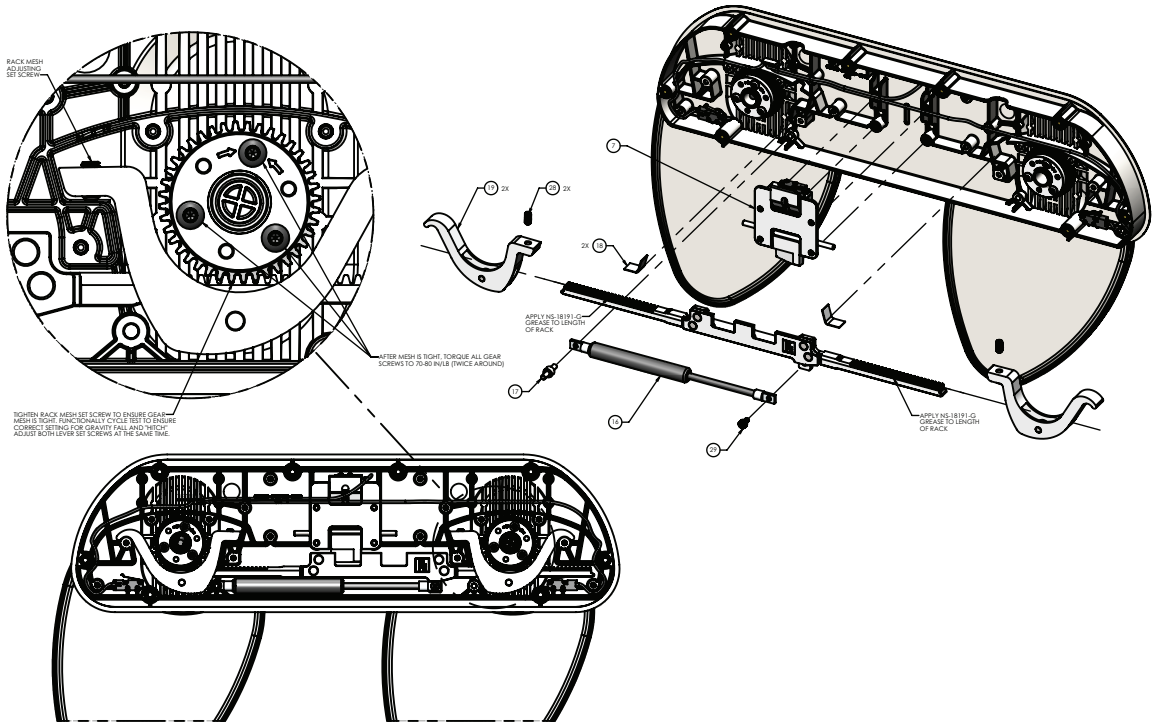
RACK MESH ADJUSTING SET SCREW
TIGHTEN RACK MESH SET SCREW TO ENSURE GEAR MESH IS TIGHT. FUNCTIONALLY CYCLE TEST TO ENSURE CORRECT SETTING FOR GRAVITY FALL AND "HITCH". ADJUST BOTH LEVER SET SCREWS AT THE SAME TIME.
AFTER MESH IS TIGHT, TORQUE ALL GEAR SCREWS TO 70-80 IN/LB (TWICE AROUND)
2X
2X
2X
APPLY NS-18191-G GREASE TO LENGTH OF RACK
APPLY NS-18191-G GREASE TO LENGTH OF RACK

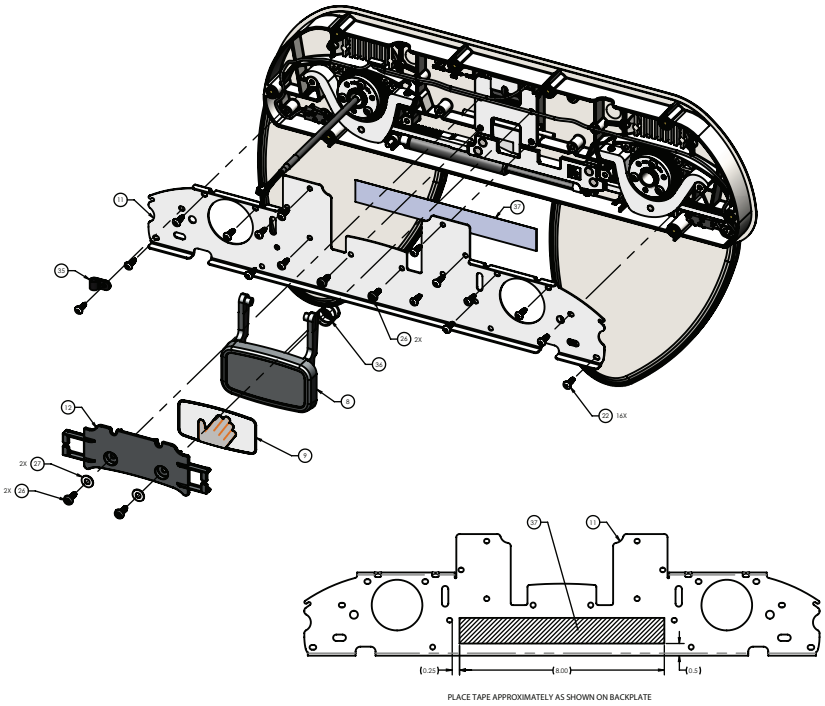
11
37
18
50 2X
54
8
16 16X
17
9
2X 27
2X 28
37
11
(0.25)
(8.00)
(0.5)
PLACE TAPE APPROXIMATELY AS SHOWN ON BACKPLATE

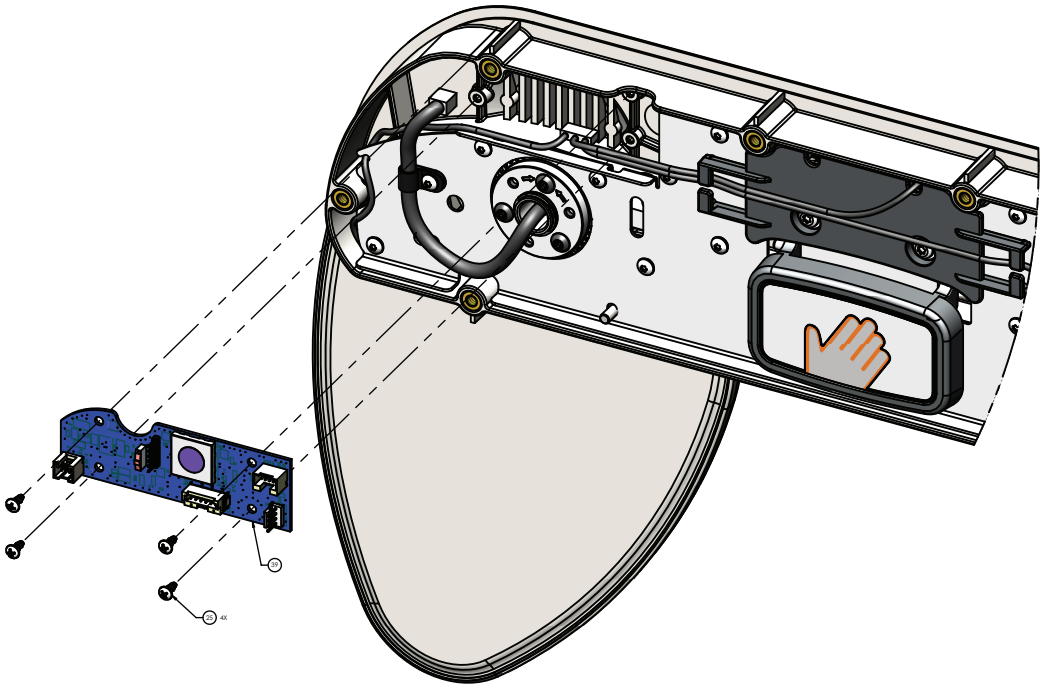
19
25 4X

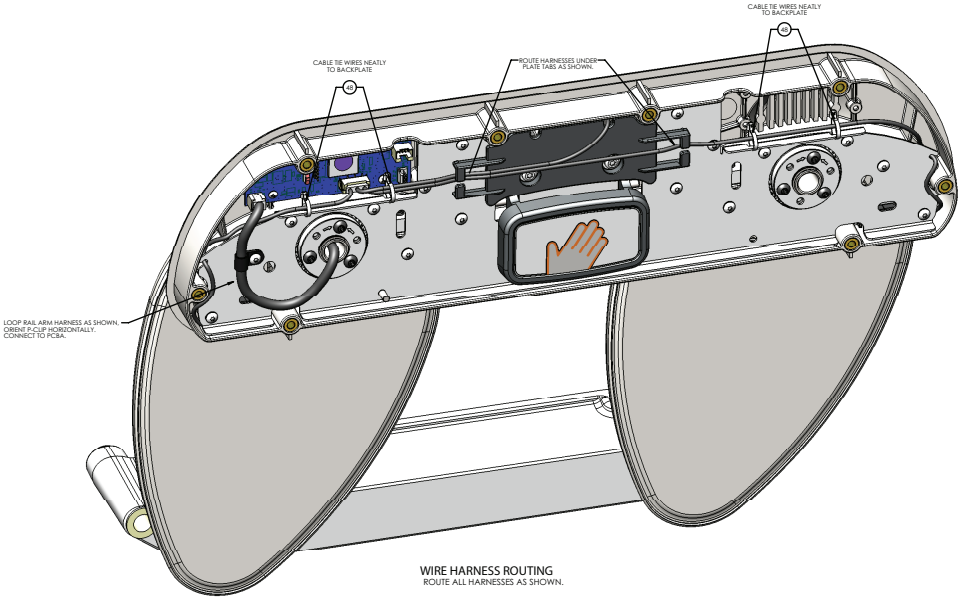

WIRE HARNESS ROUTING
ROUTE ALL HARNESSES AS SHOWN.

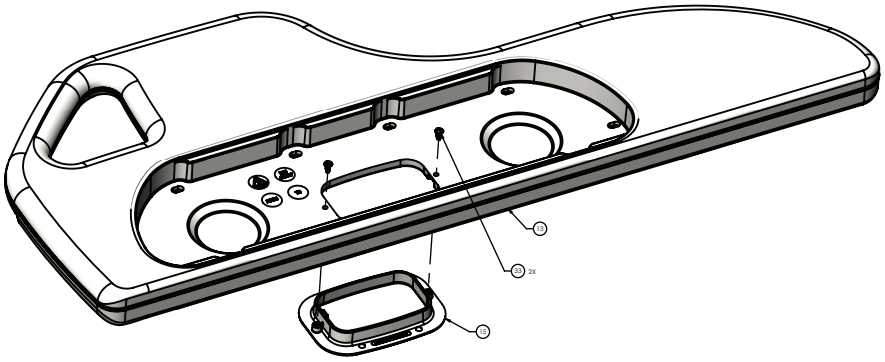

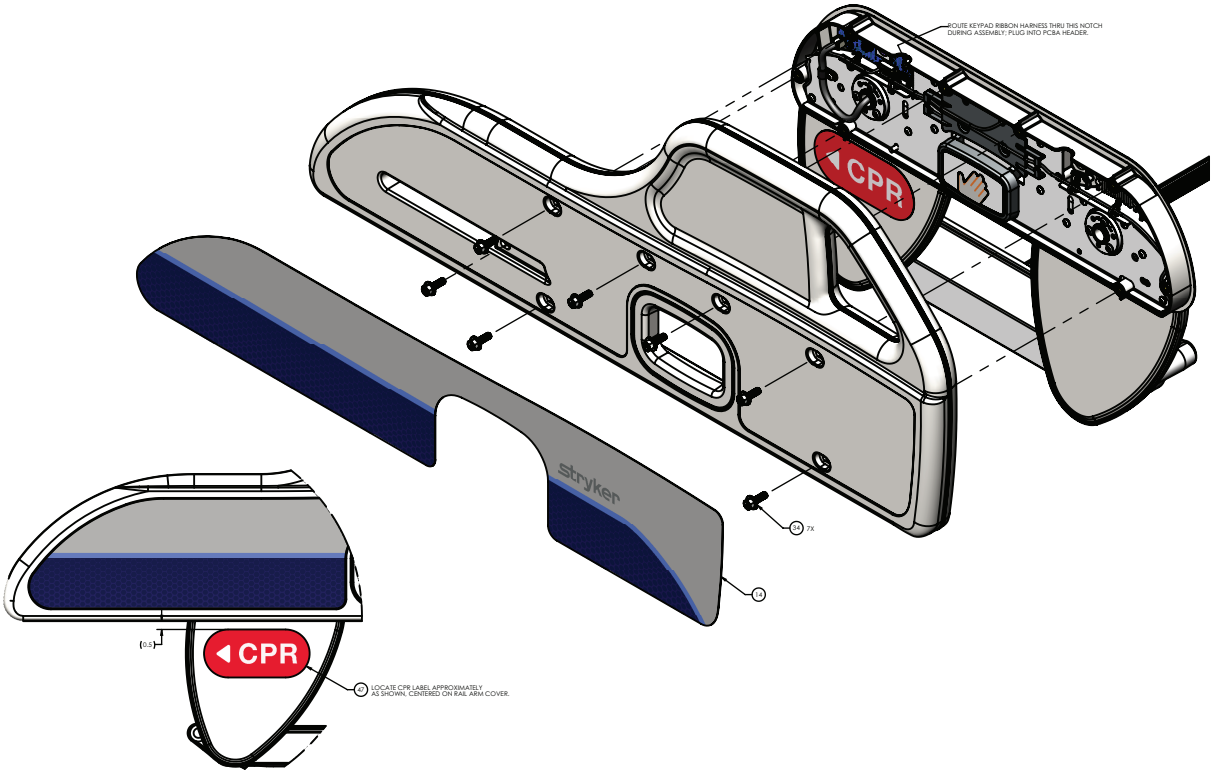

Rail assembly, foot 5900200132 Rev E (Reference only)			
Item	**Number**	**Name**	**Quantity**
1	5900200047	*Bracket assembly, lower rail slide* (page 190)	1
2	5900200061	*Rail arm assembly, power/communication* (page 180)	1
3	5900200060	*Rail arm assembly, no cable* (page 189)	1
4	5900600026	Backplate, upper rail C/W inserts	1
5	5900560005	Bushing, 1” taper lock	2
6	5900560030	Sprocket, 20DP 14.5PA 40th taper lock	2
7	5900200023	Latch lock assembly-LH/RF	1
8	5900600029	Handle-rail push	1
9	5900690066	Badge, siderail push handle	1
10	5900200155	Rail gear rack assembly LH/RF	1
11	5900540057P	Cover, upper rail backplate plated	1
12	5900600032	Cover, upper rail latch	1
13	5900650007	Rail panel, rack drive-patient foot R	1
14	5900690056	Overlay, foot rail, outboard PR	1
15	5900600028	Bezel, upper rail pull handle	1
16	5900200028	Hydraulic damper sub assembly	1
17	5900500037	Pin, damper mount stud	1
18	5900370032	Flatform, rail-load distribution plate	2
19	5900200083	Lever, alum rail arm rack drive preload assembly	2
20	5900560022	Rail arm cam stop-HL/FR	2
21	5900330009	Bushing, FLG 1.125x1.281x0.750LG (FLG 1.562x0.078)	2

Rail assembly, foot 5900200132 Rev E (Reference only)			
Item	**Number**	**Name**	**Quantity**
22	5900340074	Screw, plastite pan head Torx #8-16 x 1/2” LG zinc	16
23	5900370005	Shim, 1.00 ID x 1.50 OD x 0.010 THK	2
24	5900340012	Screw, pan PH M1.91 x 12mm tri lobe	4
25	5900340008	Screw, pan PH #6-UNC x 0.313 HI-LO	4
26	5900340073	Screw, BH Torx #10-24 UNC x 0.50 tri lobe	4
27	0011-302-000	Washer, type A SAE #10 screw, Ø7/32 ID x Ø1/2 OD	2
28	5900340075	Set screw, 1/4-UNC x 0.50 non-mar nylon patch	2
29	5900340015	Screw, SHLDR 3/16 x 0.125-#8-UNC	1
30	5900350010	Ring, spirolox RTNG EXT 0.750 SST	2
31	5900350011	Ring, spirolox RTNG EXT 0.875 SST	2
32	0004-634-000	Screw, BHCS #10-UNF x 0.500	6
33	5900340010	Screw, pan PH #8-UNC x 0.375 tri lobe	2
34	5900340086	Screw, serrated hex FLG 1/4-UNC x 0.75LG zinc	7
35	5900350022	Clamp, P-clip 1/4” nylon loop-black	1
36	5900370108	Latch pin spring	1
37	5900370068	Tape, wear-resistant UHMW 1”W , 0.005”THK x 8.0”LG	1
38	5900340076	Set screw, 3/8-UNC x 0.75 non-mar nylon patch	4
39	590040004204	PCBA, IOM SRC FT PR	1
40	5900410002	Switch, SPST-N/P omron D3M-01K3-3	2
41	5900340071	Screw, SEMS pan PH #6-32x3/8LG INT wash zinc PL	2
42	5900520067P	Cover, lower rail casting plated	1
43	5900370025	Rubber edge trim	2
44	5900400051	PCBA, JCTN HD/FT PL-IN/PR-OUT	1
45	5900430147	HRNS, flat flex cable shielded long	1
46	5900430156	HRNS, SRC rail position	1
47	5900690086	Label, locator CPR handle PR	1
48	3000-300-114	Cable tie, nylon 4” LG	4
49	5900340122	Screw, Taptite pan head Torx #8-32 x 1/2” lg zinc	2

Rail assembly, foot 5900200133 Rev E (Reference only)			
Item	**Number**	**Name**	**Quantity**
1	5900200047	*Bracket assembly, lower rail slide* (page 190)	1
2	5900200061	*Rail arm assembly, power/communication* (page 180)	1
3	5900200060	*Rail arm assembly, no cable* (page 189)	1
4	5900600026	Backplate, upper rail C/W inserts	1
5	5900560005	Bushing, 1” taper lock	2
6	5900560030	Sprocket, 20DP 14.5PA 40th taper lock	2
7	5900200024	Latch lock assembly-RH/LF	1
8	5900600029	Handle-rail push	1
9	5900690066	Badge, siderail push handle	1
10	5900200154	Rail gear rack assembly RH/LF	1
11	5900540057P	Cover, upper rail backplate plated	1
12	5900600032	Cover, upper rail latch	1

Rail assembly, foot 5900200133 Rev E (Reference only)			
Item	**Number**	**Name**	**Quantity**
13	5900650008	Rail panel, rack drive-patient foot L	1
14	5900690057	Overlay, foot rail, outboard PL	1
15	5900600028	Bezel, upper rail pull handle	1
16	5900200028	Hydraulic damper sub assembly	1
17	5900500037	Pin, damper mount stud	1
18	5900370032	Flatform, rail-load distribution plate	2
19	5900200083	Lever, alum rail arm rack drive preload assembly	2
20	5900560021	Rail arm cam stop-HR/FL	2
21	5900330009	Bushing, FLG 1.125x1.281x0.750LG (FLG 1.562x0.078)	2
22	5900340074	Screw, plastite pan head Torx #8-16 x 1/2” LG zinc	16
23	5900370005	Shim, 1.00 ID x 1.50 OD x 0.010 THK	2
24	5900340012	Screw, pan PH M1.91 x 12mm tri lobe	4
25	5900340008	Screw, pan PH #6-UNC x 0.313 HI-LO	4
26	5900340073	Screw, BH Torx #10-24 UNC x 0.50 tri lobe	4
27	0011-302-000	Washer, type A SAE #10 screw, Ø7/32 ID x Ø1/2 OD	2
28	5900340075	Set screw, 1/4-UNC x 0.50 non-mar nylon patch	2
29	5900340015	Screw, SHLDR 3/16 x 0.125-#8-UNC	1
30	5900350010	Ring, spirolox RTNG EXT 0.750 SST	2
31	5900350011	Ring, spirolox RTNG EXT 0.875 SST	2
32	0004-634-000	Screw, BHCS #10-UNF x 0.500	6
33	5900340010	Screw, pan PH #8-UNC x 0.375 tri lobe	2
34	5900340086	Screw, serrated hex FLG 1/4-UNC x 0.75LG zinc	7
35	5900350022	Clamp, P-clip 1/4” nylon loop-black	1
36	5900370108	Latch pin spring	1
37	5900370068	Tape, wear-resistant UHMW 1”W , 0.005”THK x 8.0”LG	1
38	5900340076	Set screw, 3/8-UNC x 0.75 non-mar nylon patch	4
39	590040004203	PCBA, IOM SRC FT PL	1
40	5900410002	Switch, SPST-N/P omron D3M-01K3-3	2
41	5900340071	Screw, SEMS pan PH #6-32x3/8LG INT wash zinc PL	2
42	5900520067P	Cover, lower rail casting plated	1
43	5900370025	Rubber edge trim	2
44	5900400052	PCBA, JCTN HD/FT PL-OUT/PR-IN	1
45	5900430146	HRNS, flat flex cable shielded short	1
46	5900430156	HRNS, SRC rail position	1
47	5900690087	Label, locator CPR handle PL	1
48	3000-300-114	Cable tie, nylon 4” LG	4
49	5900340122	Screw, Taptite pan head Torx #8-32 x 1/2” lg zinc	2

Rail arm assembly, no cable

5900200060 Rev A (Reference only)

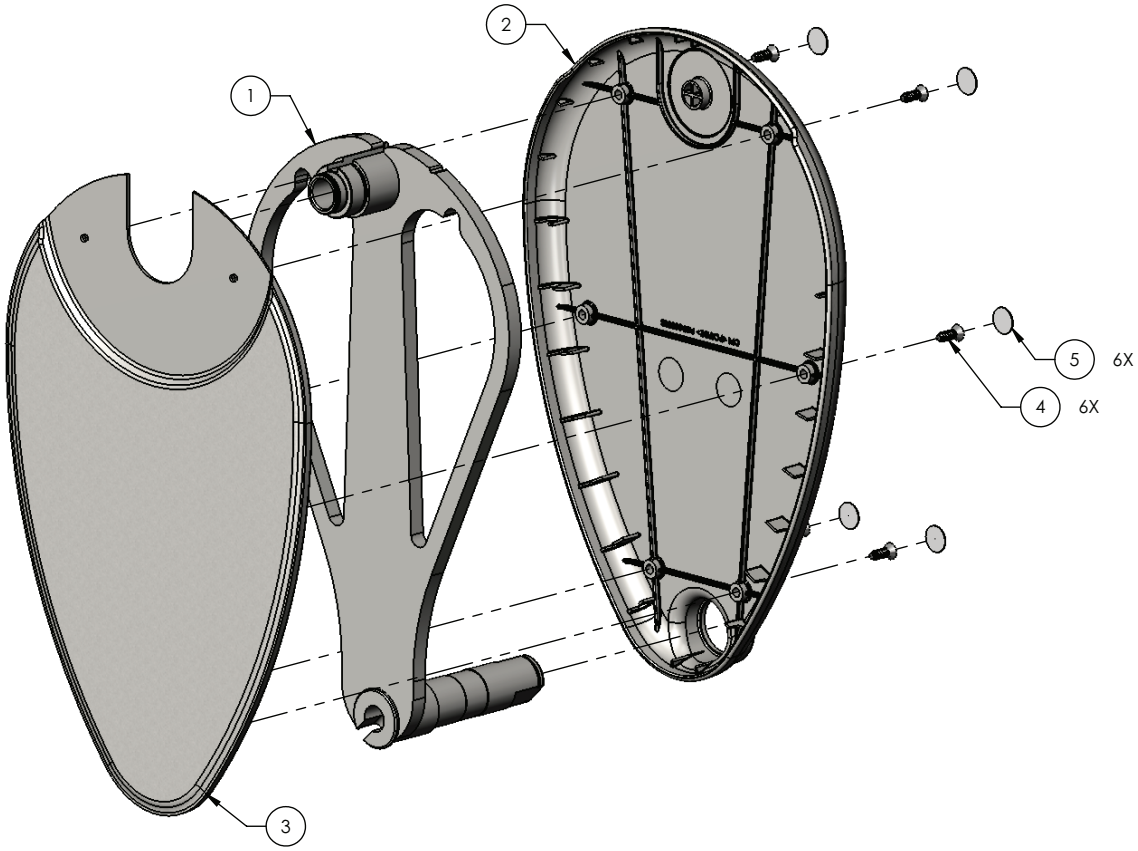

Item	Number	Name	Quantity
1	5900240028	Rail arm weldment	1
2	5900600008	Rail arm cover, inside	1
3	5900600009	Rail arm cover, outside	1
4	5900340110	Screw, flat ph #8-UNC x 0.50 tri lobe	6
5	5900690009	Overlay, screw cover Ø1/2” white	6

Bracket assembly, lower rail slide

5900200047 Rev B (Reference only)

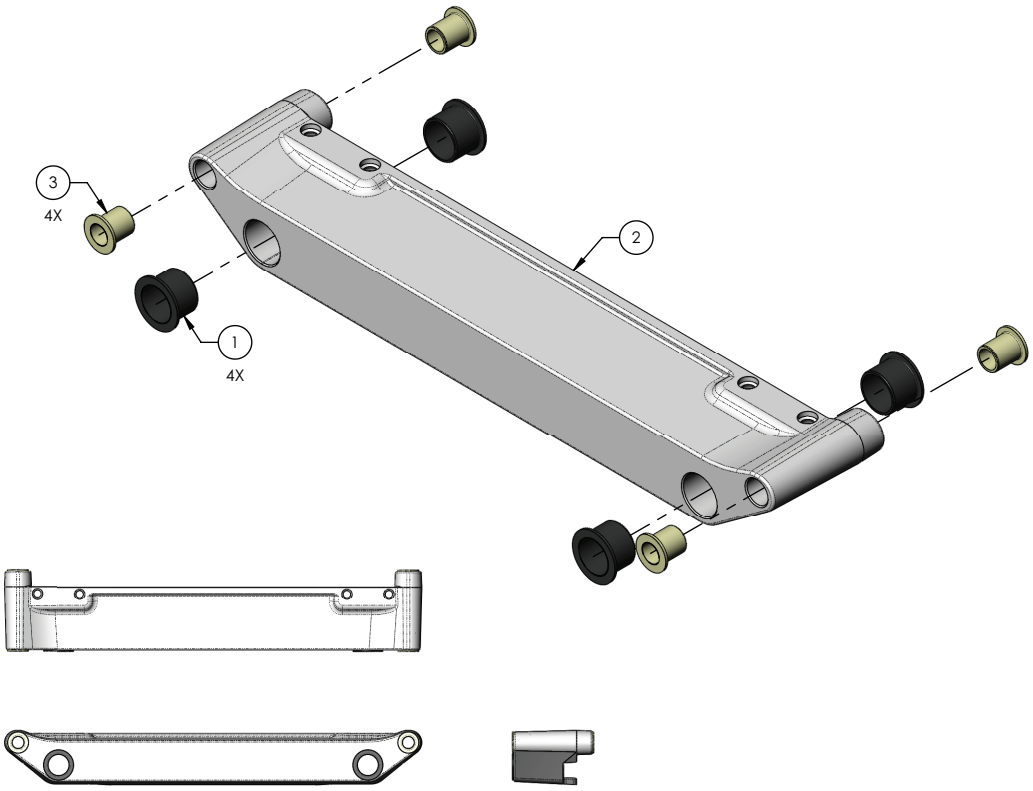

Item	Number	Name	Quantity
1	5900330008	Bushing, flg 0.875x1.000x0.375lg (flg 1.250x0.062)	4
2	5900560020	Bracket, rail arm slide w/camstop- cast	1
3	5900330010	Bushing, flg 0.500x0.625x0.750lg (flg 0.875x0.062)	4

Footboard assembly - 5900200025

Rev C (Reference only)

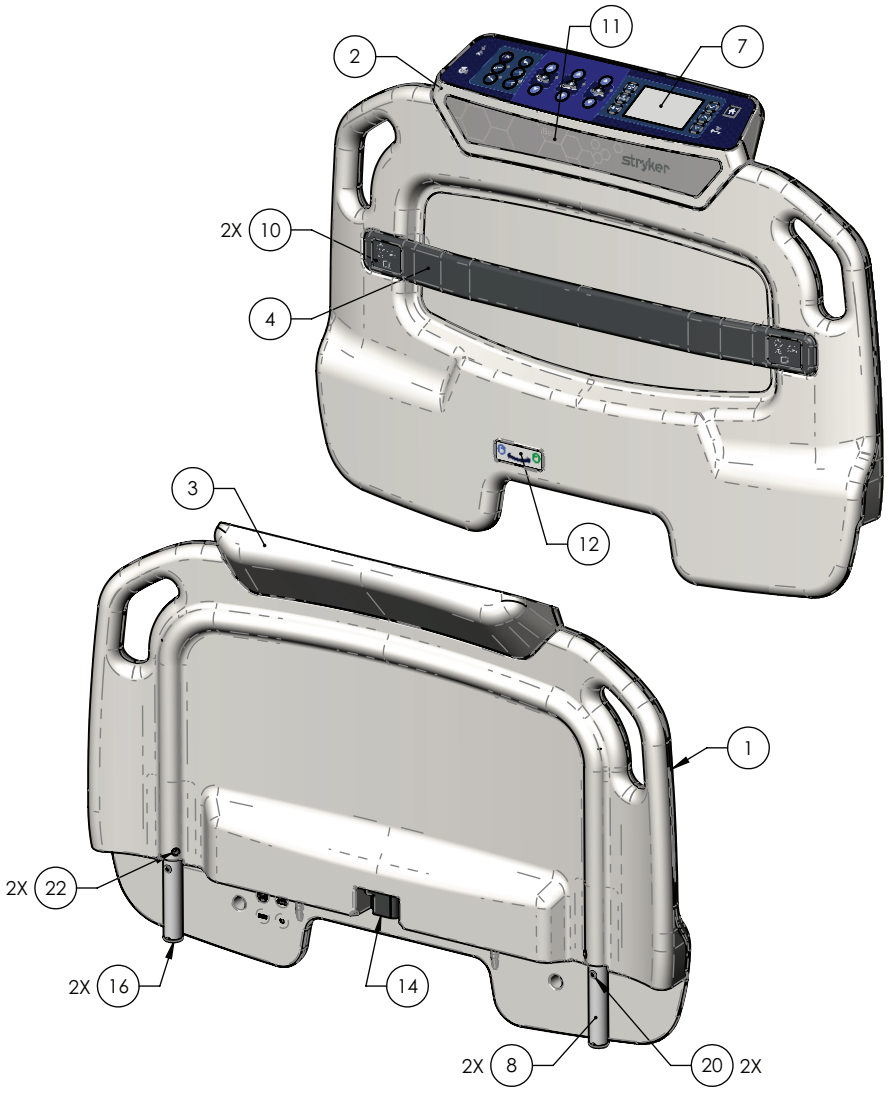

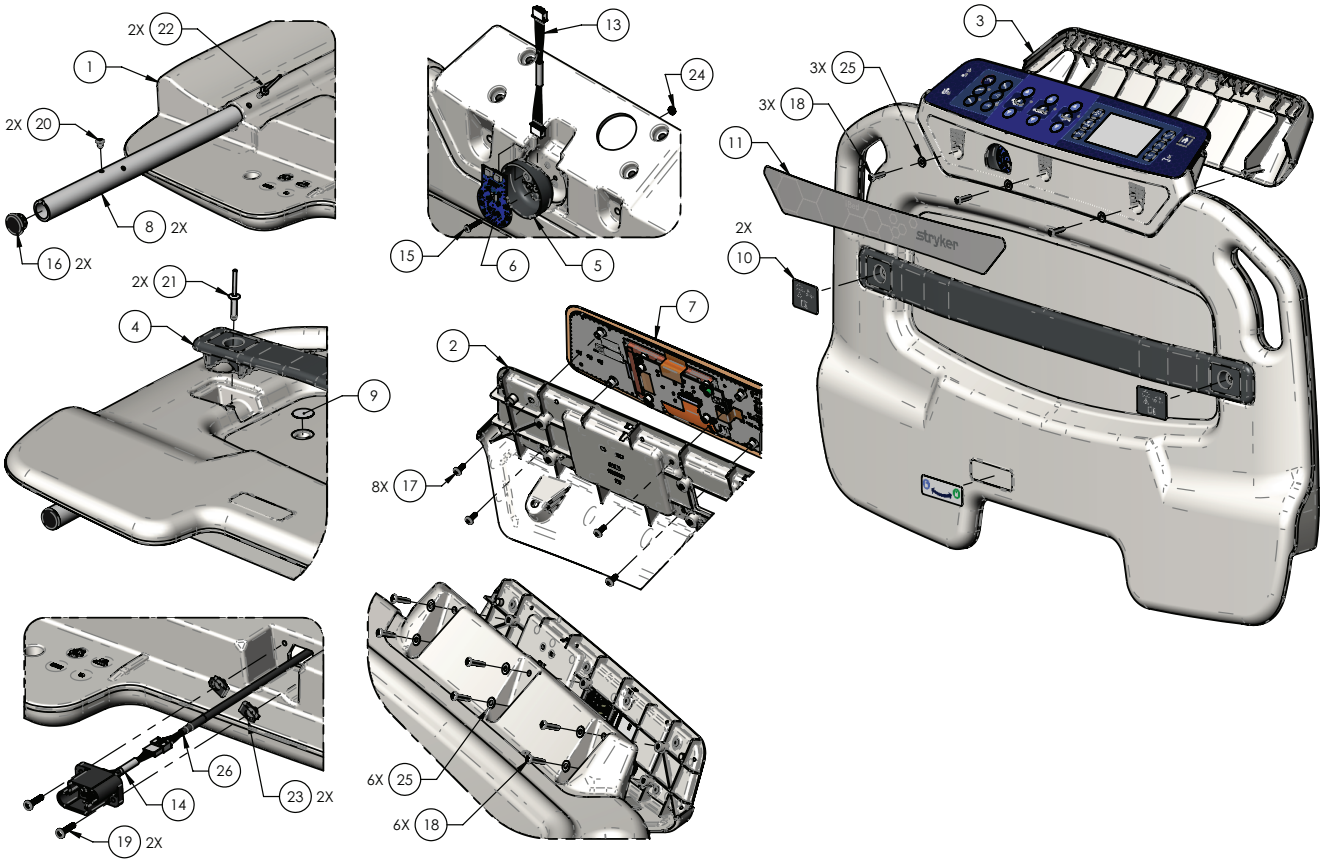

Item	Number	Name	Quantity
1	5900650002	Footboard panel	1
2	5900600014	Front plate bezel	1
3	5900600015	Back cover bezel	1
4	5900600016	Integrated hanger bracket, footboard	1
5	5900600081	Insert, watchdog light blocker	1
6	5900400032	iBed light board	1
7	5900470017	Keypad	1
8	5900540254P	Post, footboard	2
9	5900690017	Overlay, blank	4
10	5900690024	Overlay, hanger	2
11	5900690060	Overlay, iBed light	1
12	5900690080	Label, lock/unlock	1
13	5900430138	Harness, watchdog light	1
14	5900430170	Harness, footboard	1
15	5900340117	Pan head screw	1
16	5900370080	Plug, tube	2
17	5900340071	Pan head screw	8
18	5900340115	Pan head screw	9
19	5900340087	Pan head screw	2
20	5900370102	Blind rivet	2
21	0025-191-000	Dome rivet	2

Item	Number	Name	Quantity
22	0025-050-000	Pop rivet	2
23	5900310019	Nut	2
24	0016-007-000	Nylock hex nut	1
25	0011-302-000	Washer	9
26	5900430171	Harness, footboard	1

Expandable headboard assembly - 5900200026

Rev D (Reference only)

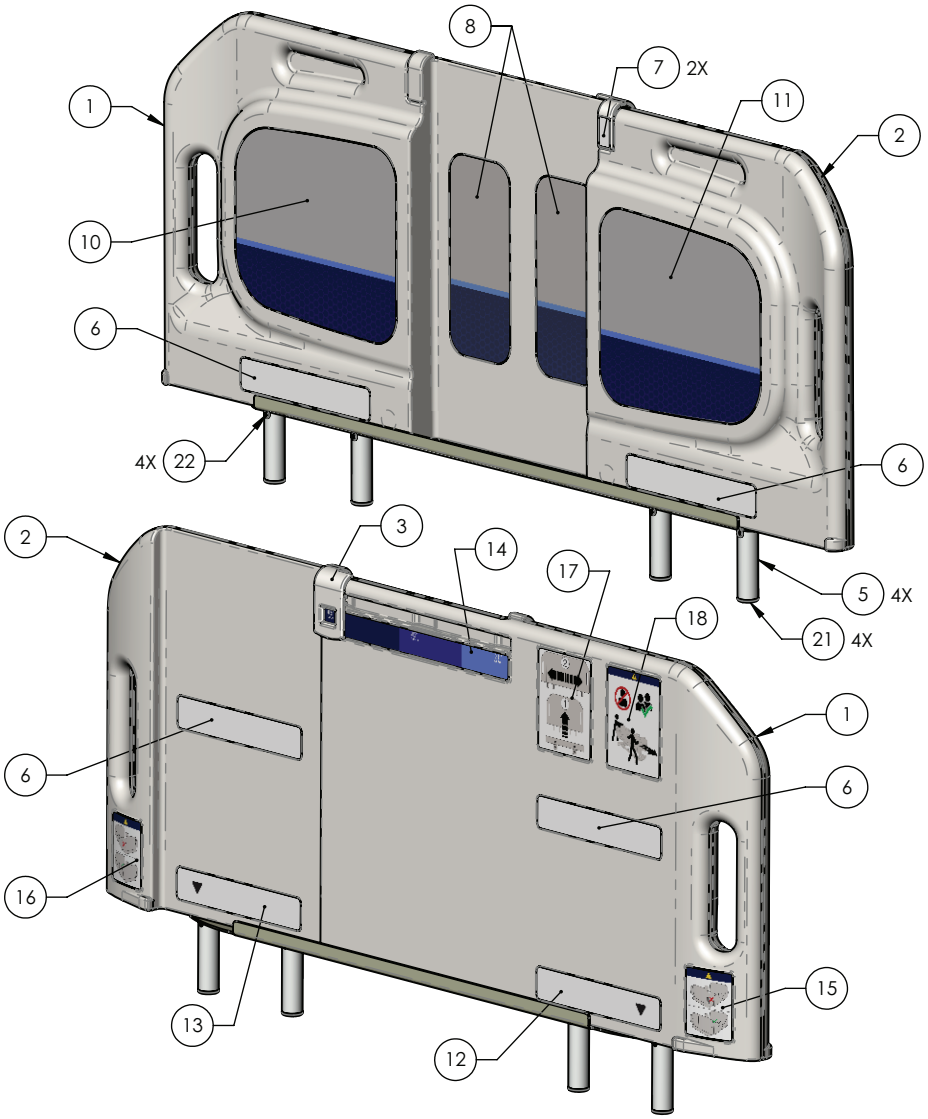

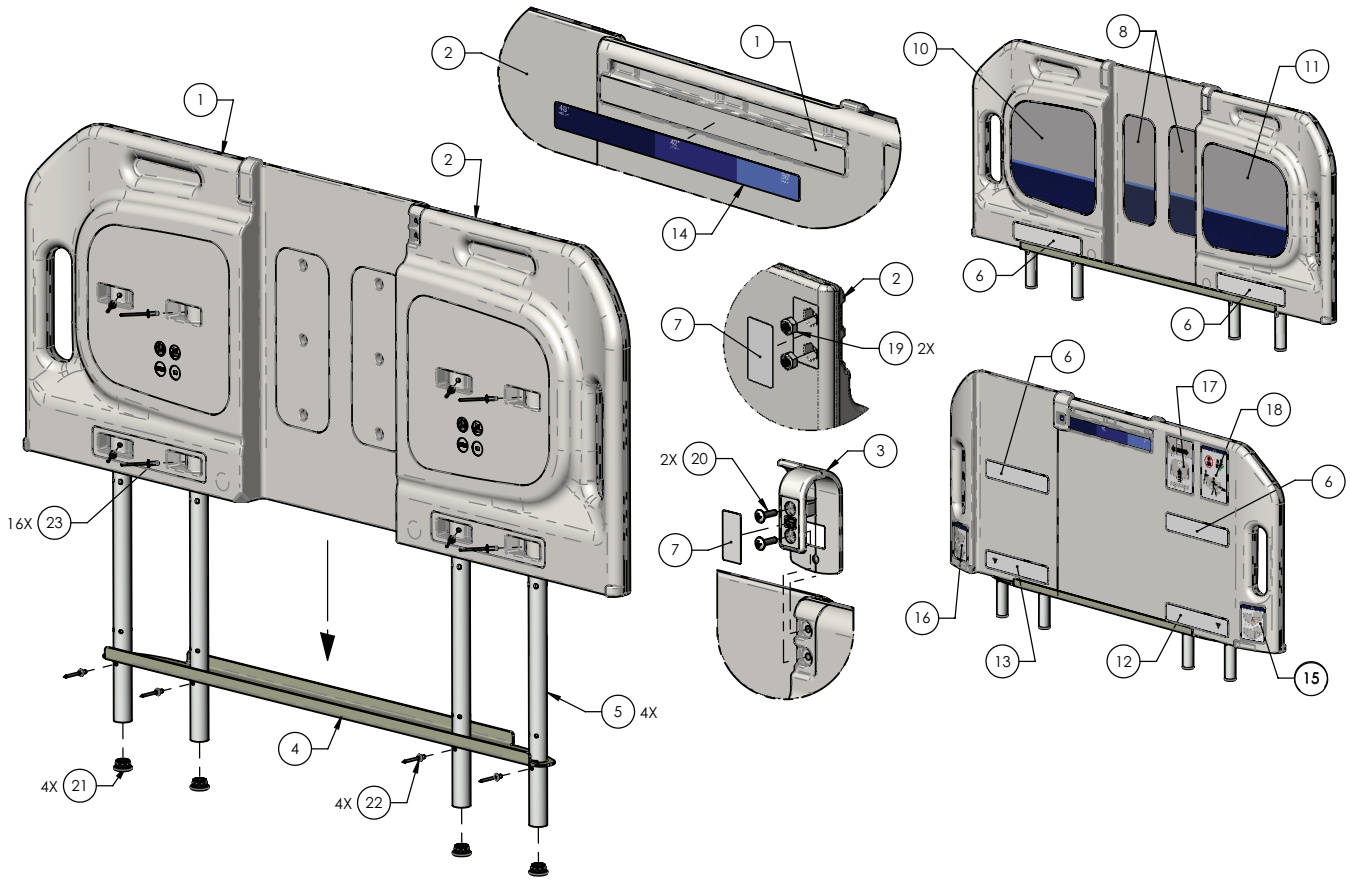

Item	Number	Name	Quantity
1	5900650003	Panel, expandable headboard, patient right, large	1
2	5900650004	Panel, expandable headboard, patient left, small	1
3	5900600083	Clip, expandable headboard keeper	1
4	5900520094	Bracket, expandable headboard support	1
5	5900540253P	Post, expandable headboard plated	4
6	5900690008	Overlay, post pocket, expandable headboard	4
7	5900690015	Overlay, expandable headboard, clip	2
8	5900690061	Overlay, expandable headboard, inboard	1
10	5900690063	Overlay, expandable headboard, inboard, patient right	1
11	5900690064	Overlay, expandable headboard, inboard, patient left	1
12	5900690083	Overlay, locator expandable headboard post, patient right	1
13	5900690084	Overlay, locator expandable headboard post, patient left	1
14	5900690072	Label, indicator headboard width	1
15	5900690077	Label, warning expandable headboard width, patient right	1
16	5900690078	Label, warning expandable headboard width, patient left	1
17	5900690085	Label, headboard removal/expansion	1
18	5900690094	Label, transport warning	1
19	5900310017	Nut, thin hex nylock #8-32 UNC zinc GR2	2
20	5900340108	Screw, truss PH #8-UNC x 0.625	2

Item	Number	Name	Quantity
21	5900370080	Plug, tube finishing Ø1.0 OD x Ø0.74-Ø0.83 ID blk	4
22	5900370102	Rivet, 3/16 x 5/16" LG blind alum	4
23	0025-050-000	Rivet, Ø3/16 x 0.375 pop rvt SD66BS	16

Power supply cord - 0039-254-000

Rev F (Reference only)

Accessory cord, type B 120V - 5900430166

Rev A (Reference only)

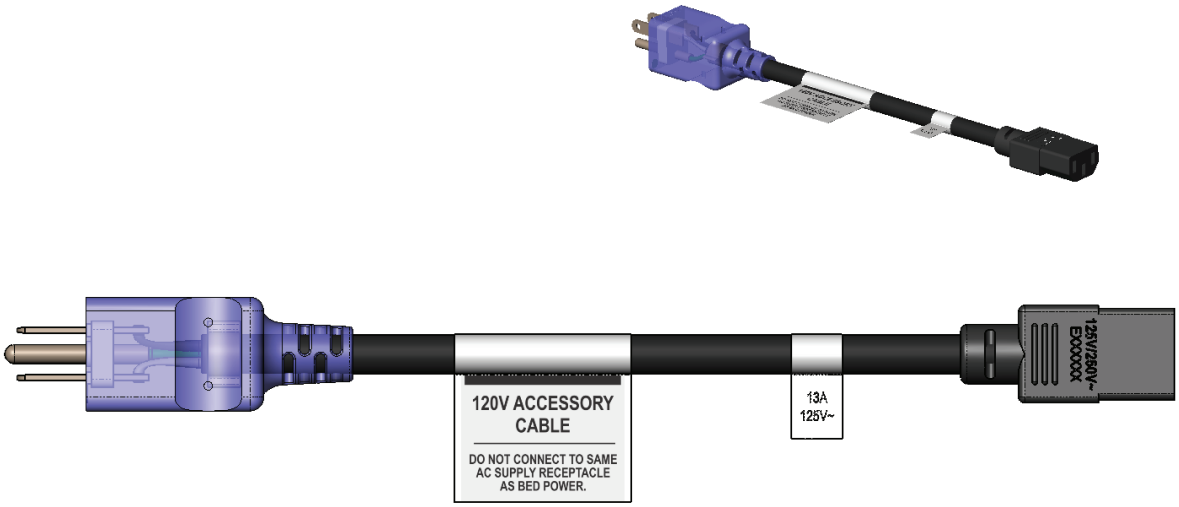

Power cord, type G 230V UK/IRE - 5900430165

Rev A (Reference only)

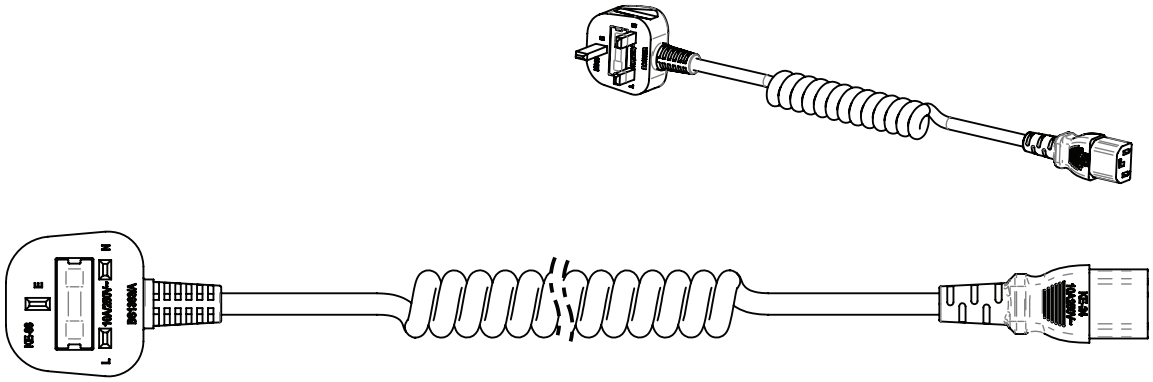

Accessory cord, type G 230V UK/IRE - 5900430168

Rev B (Reference only)

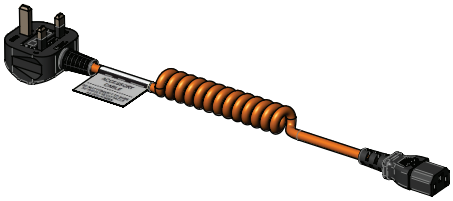

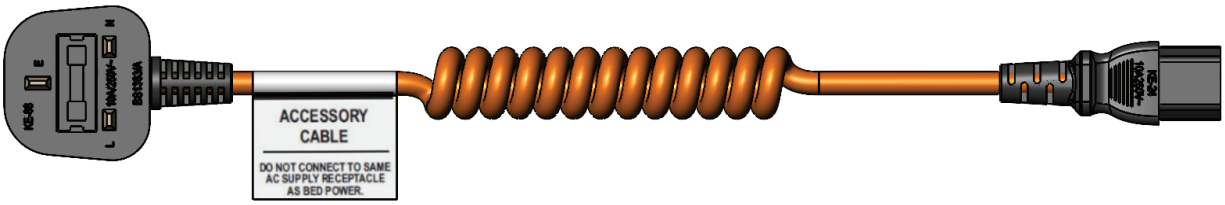

Power cord, type I 230V AS/NZS - 5900430164

Rev A (Reference only)

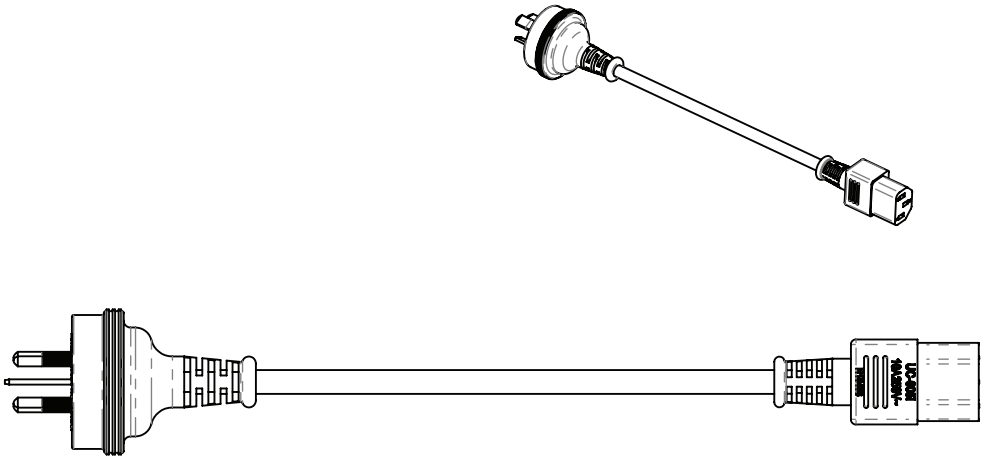

Accessory cord, type I 230V AS/NZS - 5900430167

Rev A (Reference only)

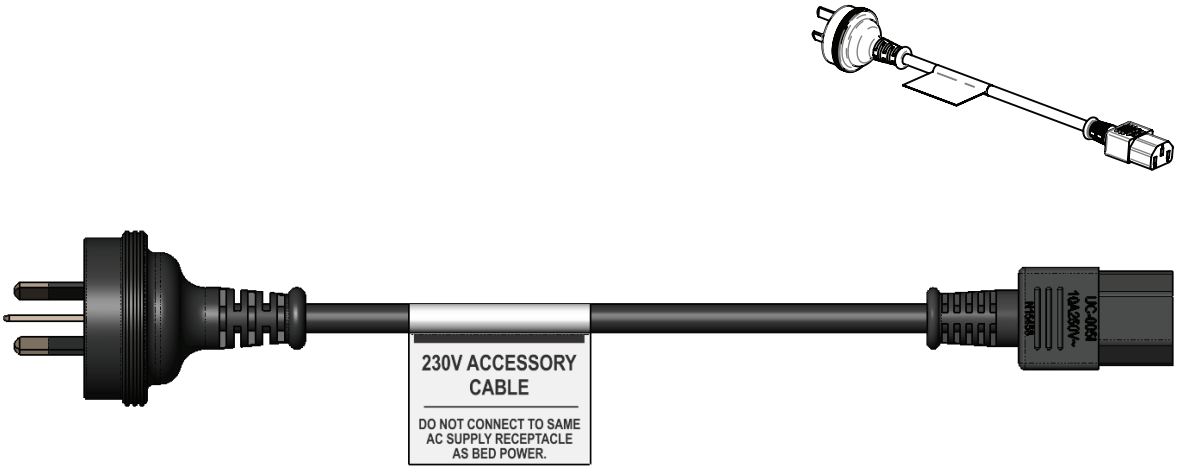

Upright bottle holder assembly - 5900200142

Rev D (Reference only)

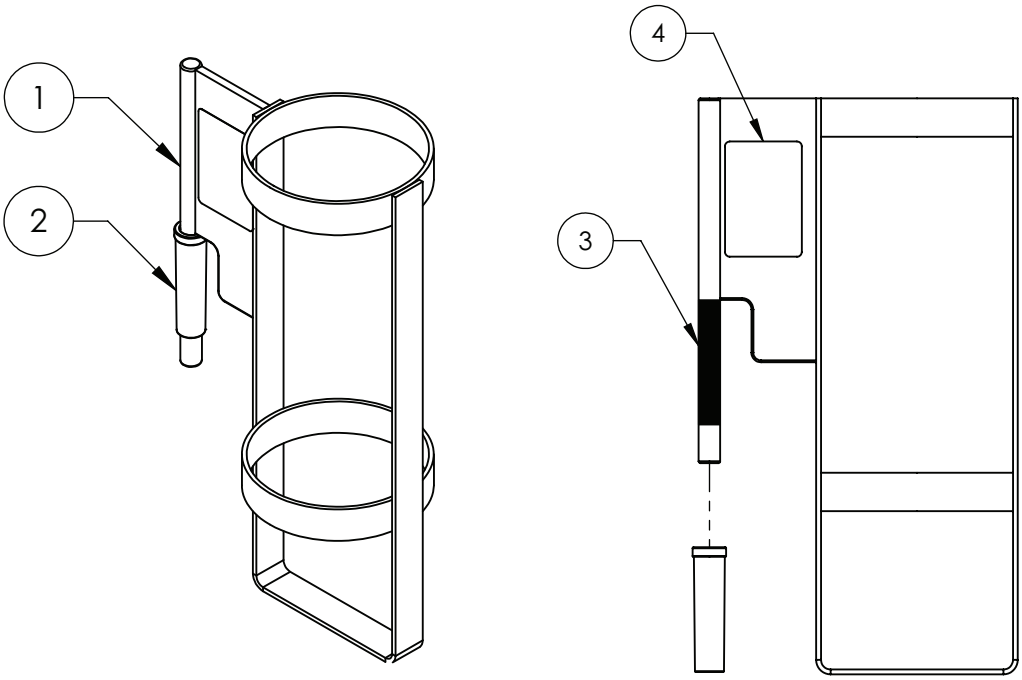

Item	Number	Name	Quantity
1	5900240117	Weldment, upright bottle holder	1
2	5900500141	Adaptor, upright bottle holder	1
3	Reference only	ASI RP 2400 adhesive	-
4	5900180082	Upright bottle holder assembly specification label	1

IV pole assembly - 5900200144

Rev G (Reference only)

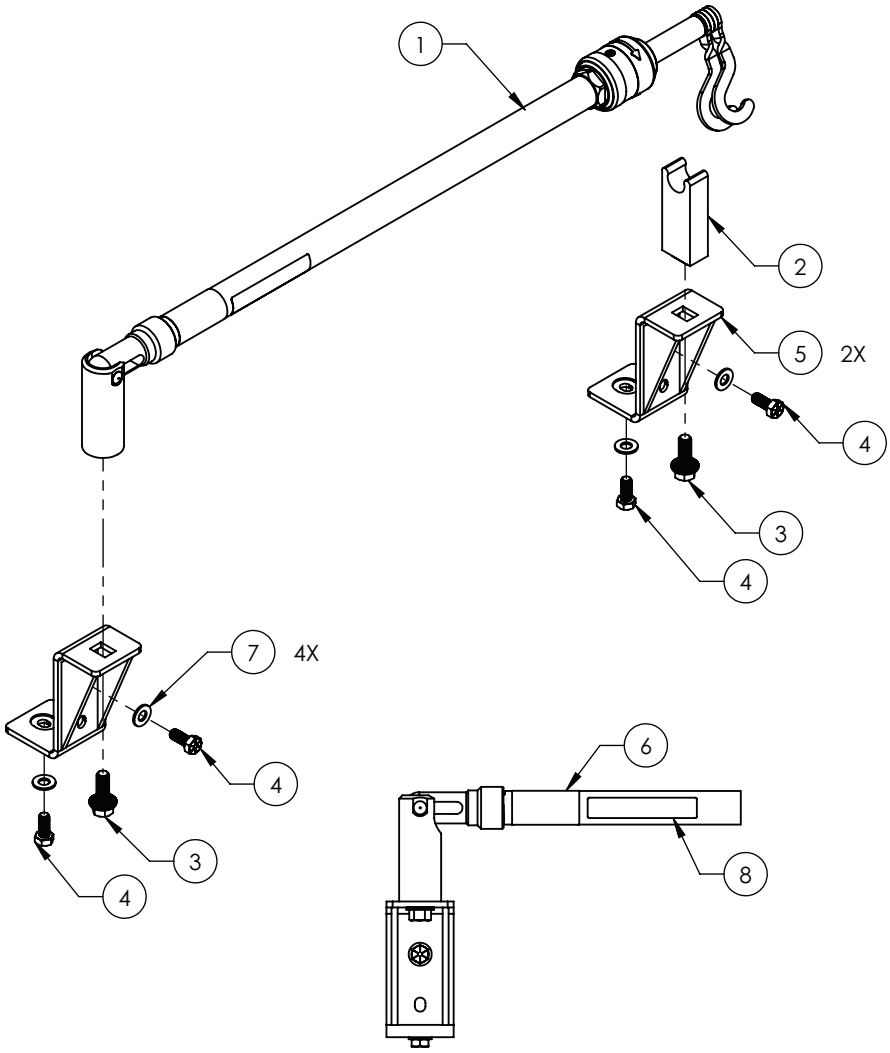

Item	Number	Name	Quantity
1	5900200143	2 stage IV pole assembly	1
2	5900500143	IV pole rest block	1
3	5900340100	Hex screw	2
4	5900340116	Hex head screw	4
5	5900240118	IV pole weldment bracket	2
6	5900180084	Label, specification	1
7	0011-003-000	Washer	4
8	108900350901	Label, EAR	1

Patient helper assembly - 5900200145

Rev E (Reference only)

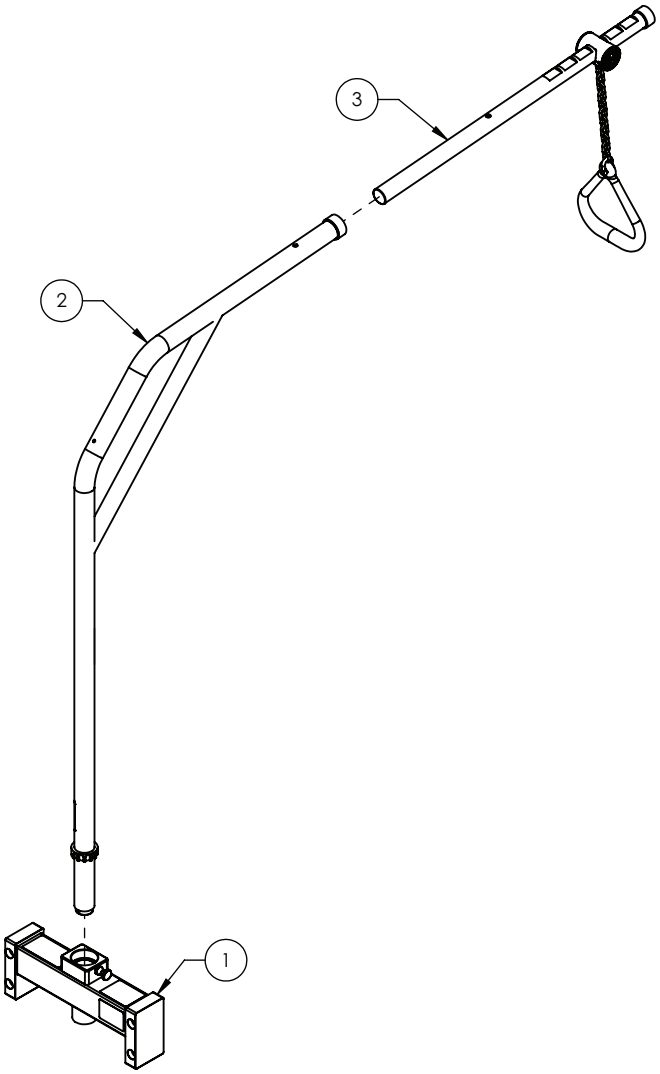

Item	Number	Name	Quantity
1	5900200171	Assembly, mounting bracket, patient helper	1
2	5900200170	Assembly, lifting pole, patient helper	1
3	5900200156	Trapeze hanger, patient helper	1

EMC information

WARNING

- Portable RF communications equipment, including peripherals such as antenna cables and external antennas, should be no closer than 12 inches (30 cm) to any part of MV3, including cables specified by the manufacturer.
- Avoid stacking or placing equipment adjacent with other equipment to prevent improper operation of the products. If such use is necessary, carefully observe stacked or adjacent equipment to make sure that they are operating properly.
- The use of accessories, transducers, and cables, other than those specified or provided by the manufacturer, could result in increased electromagnetic emissions or decreased electromagnetic immunity and result in improper operation.

CAUTION - This equipment is not intended for use in residential environments and may not provide adequate protection to radio reception in such environments.

The 5900 MV3 Bariatric bed was evaluated using the following cables:

Cable	Length (m)
AC mains input cable	2.5
AC aux input cable	2.5
AC aux output cable	1.8
Nurse call (DB-37)	2.4
Nurse call (1/4 in.)	2.4

Guidance and manufacturer's declaration - electromagnetic emissions		
The 5900 MV3 Bariatric bed is intended for use in the electromagnetic environment specified below. The customer or the user of the 5900 MV3 Bariatric bed should assure that it is used in such an environment.		
Emissions test	**Compliance**	**Electromagnetic environment**
RF Emissions CISPR 11	Group 1	**Note -** The emissions characteristics of this equipment make it suitable for use in industrial areas and hospitals (CISPR 11 class A). If it is used in a residential environment (for which CISPR 11 class B is normally required) this equipment might not offer adequate protection to radio-frequency communication services. The user might need to take mitigation measures, such as relocating or re-orienting the equipment.
RF Emissions CISPR 11	Class A	
Harmonic Emissions IEC 61000-3-2	Class A	
Voltage Fluctuations Flicker Emissions IEC 61000-3-3	Complies	

Guidance and manufacturer's declaration - electromagnetic immunity			
The 5900 MV3 Bariatric bed is suitable for use in a professional healthcare facility environment and not in environments exceeding immunity test conditions that the product was evaluated to, such as near high frequency (HF) surgical equipment and inside of the radio frequency (RF) shielded room of magnetic resonance imaging (MRI) equipment. The customer or the user of the 5900 MV3 Bariatric bed should assure that it is used in such an environment and that the electromagnetic environment guidance listed below is followed.			
Immunity test	**IEC 60601 test level**	**Compliance level**	**Electromagnetic environment-guidance**
Electrostatic Discharge (ESD) IEC 61000-4-2	±8 kV contact ±15 kV air	±8 kV contact ±15 kV air	Floors should be wood, concrete, or ceramic tile. If floors are covered with synthetic material, the relative humidity should be at least 30%.

Guidance and manufacturer's declaration - electromagnetic immunity			
Electrostatic fast transient/ burst IEC 61000-4-4	±2 kV for power supply lines ±1 kV for input/ output lines	±2 kV for power supply lines ±1 kV for input/ output lines	Main power quality should be that of a typical commercial or hospital environment.
Surge IEC 61000-4-5	±0.5 kV, ±1 kV lines to lines ±0.5 kV, ±1 kV, ±2 kV lines to earth	±0.5 kV, ±1 kV lines to lines ±0.5 kV, ±1 kV, ±2 kV lines to earth	Main power quality should be that of a typical commercial or hospital environment.
Voltage dips, voltage variations and short interruptions on power supply input lines IEC 61000-4-11	0%U_T for 0.5 cycle at 0°, 45°, 90°, 135°, 180°, 225°, 270°, and 315° 0%U_T for 1 cycle 70%U_T (30% dip in U_T) for 25/30 cycles 0% U_T for 250/300 cycles	0%U_T for 0.5 cycle at 0°, 45°, 90°, 135°, 180°, 225°, 270°, and 315° 0%U_T for 1 cycle 70%U_T (30% dip in U_T) for 25/30 cycles 0% U_T for 250/300 cycles	Main power quality should be that of a typical commercial or hospital environment. If the user of the 5900 MV3 Bariatric bed requires continued operation during power main interruptions, it is recommended that the device be powered from an uninterrupted power supply or a battery.
Power frequency (50/60 Hz) magnetic field IEC 61000-4-8	30 A/m	30 A/m	Power frequency magnetic fields should be at levels characteristic of a typical location in a typical commercial or hospital environment.
Note - U_T is the a.c. mains voltage before applications of the test level.			
Conducted RF IEC 61000-4-6 Radiated RF IEC 61000-4-3	3 Vrms 150 kHz to 80 MHz 3 V/m 80 MHz to 2.7 GHz	3 Vrms 3 V/m	Portable and mobile RF communications equipment should follow the guidance in the table titled "Recommended separation distances between portable and mobile RF communication equipment and the 5900 MV3 Bariatric bed." If the mobile service is not listed in the table, the recommended separation distance should be calculated from the equation appropriate for the frequency of the transmitter. Recommended separation distance $D=(2)(\sqrt{P})$ where *P* is the maximum output power rating of the transmitter in watts (W) according to the transmitter manufacturer and *d* is the recommended separation distance in meters (m). Field strengths from fixed RF transmitters, as determined by an electromagnetic site survey[a], should be less than the compliance level in each frequency range[b]. Interference may occur in the vicinity of equipment marked with the following symbol: 
Proximity magnetic fields IEC 61000-4-39	65 A/m 134.2 kHz	65 A/m	RFID readers and similar generators of magnetic fields should not be operated closer than 50 mm from the electronics or cables of MV3.

	7.5 A/m 13.56 MHz	7.5 A/m	

Note - These guidelines may not apply in all situations. Electromagnetic propagation is affected by absorption and reflection from structures, objects and people.

Note - The ISM (Industrial, Scientific, and Medical) bands between 0.15 MHz and 80 MHz are 6.765 MHz to 6.795 MHz; 13.553 MHz to 13.567 MHz; 26.957 MHz to 27.283 MHz; and 40.66 MHz to 40.70 MHz.

[a]Field strengths from fixed transmitters, such as base stations for radio (cellular/cordless) telephones and land mobile radios, amateur radio, AM and FM radio broadcast, and TV broadcast cannot be predicted theoretically with accuracy. To assess the electromagnetic environment due to fixed RF transmitters, an electromagnetic site survey should be considered. If the measured field strength in the location in which the 5900 MV3 Bariatric bed is used exceeds the applicable RF compliance level above, the 5900 MV3 Bariatric bed should be observed to verify normal operation. If abnormal performance is observed, additional measures may be necessary, such as reorienting or relocating the 5900 MV3 Bariatric bed.

[b]Over the frequency range 150 kHz to 80 MHz, field strengths are less than 3 Vrms.

Recommended separation distances between portable and mobile RF communication equipment and the 5900 MV3 Bariatric bed

The 5900 MV3 Bariatric bed is intended for use in an electromagnetic environment in which radiated RF disturbances are controlled. The customer or the user of the 5900 MV3 Bariatric bed can help prevent electromagnetic interferences by maintaining a minimum distance between portable and mobile RF communications equipment (transmitters) and the 5900 MV3 Bariatric bed, including cables, as recommended below, according to the maximum output power of the communications equipment.

Band (MHz)	Service	Maximum power (W)	Minimum separation distance (m)
380-390	TETRA 400	1.8	0.3
430-470	GMRS 460; FRS 460	2.0	0.3
704-787	LTE Band 13, 17	0.2	0.3
800-960	GSM 800/900; TETRA 800; iDEN 820; CDMA 850; LTE Band 5	2.0	0.3
1,700-1,990	GSM 1800; CDMA 1900; GSM 1900; DECT; LTE Band 1, 3, 4, 25; UMTS	2.0	0.3
2,400-2,570	Bluetooth; WLAN; 802.11 b/g/n; RFID 2450; LTE Band 7	2.0	0.3
5,100-5,800	WLAN 802.11 a/n	0.2	0.3

For transmitters rated at a maximum output power not listed above, the recommended separation distance *d* in meters (m) can be estimated using the equation applicable to the frequency of the transmitter, where *P* is the maximum output power rating of the transmitter in watts (W) according to the transmitter manufacturer.

Note - These guidelines may not apply in all situations. Electromagnetic propagation is affected by absorption and reflection from structures, objects and people.

Recycling passport

0039-254-000

Rev F

Item	Recyclable part number	Description	Important information	Quantity
N/A	0039-254-000	Power supply cord	No SVHC present	1

5900430165

Rev A

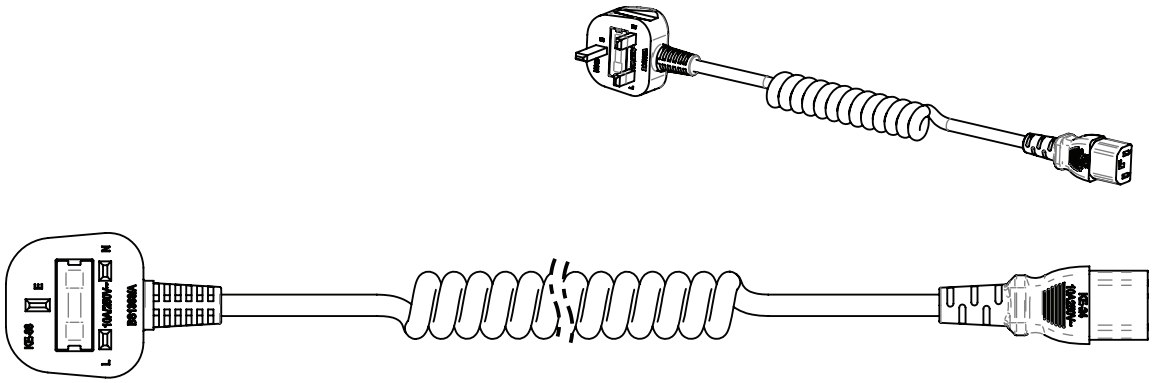

Item	Recyclable part number	Description	Important information	Quantity
N/A	5900430165	Power cord, type G 230V UK/IRE	No SVHC present	1

5900430164

Rev A

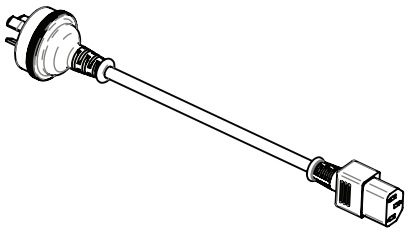

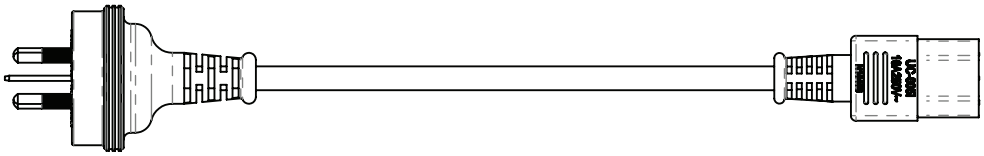

Item	Recyclable part number	Description	Important information	Quantity
N/A	5900430164	Power cord, type I 230V AS/NZS	No SVHC present	1

5900280051

Rev C

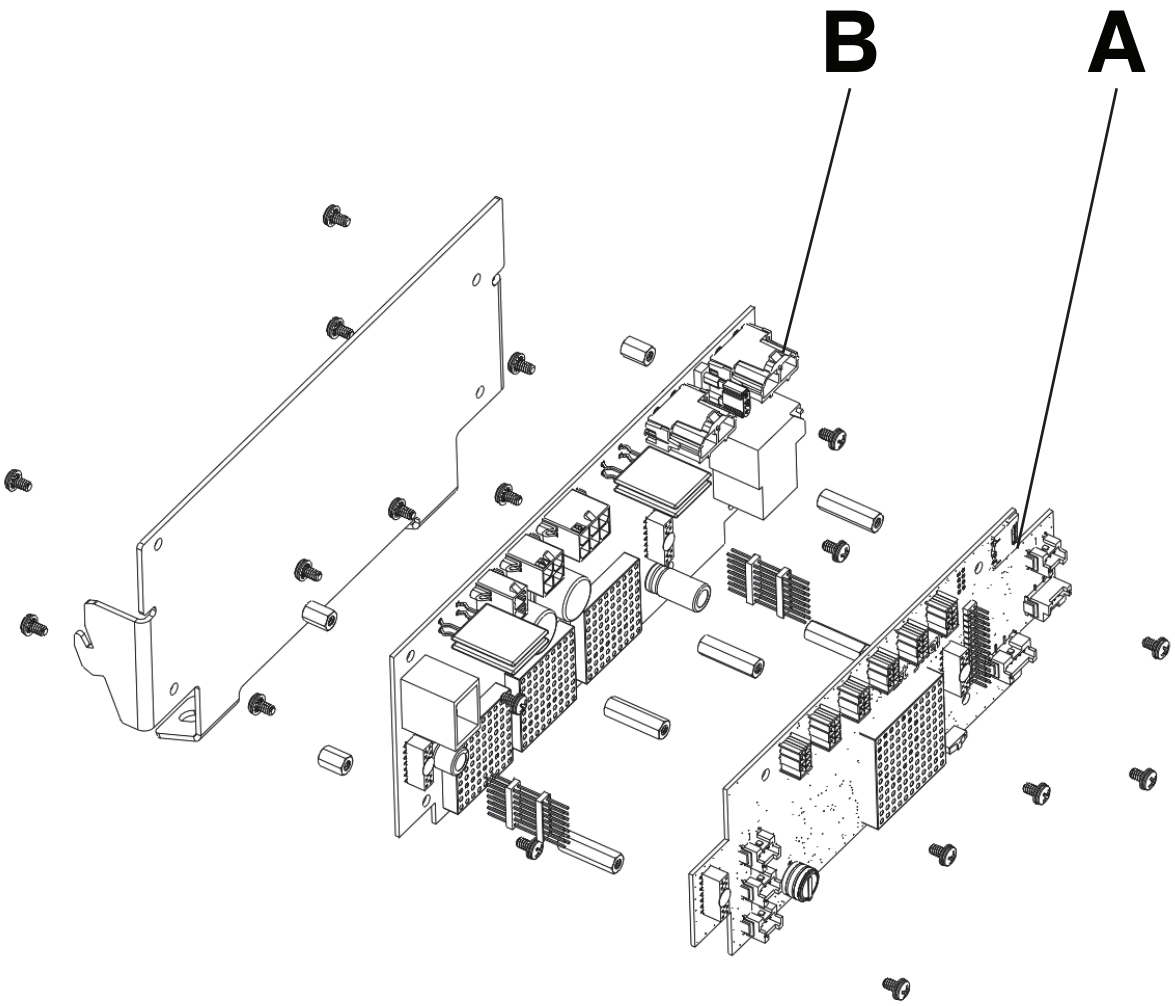

Item	Recyclable part number	Description	Important information	Quantity
A	5900400037	PCBA, MCU	No SVHC present	1
B	5900400040	PCBA, IOM PMB	No SVHC present	1

5900280033

Rev A

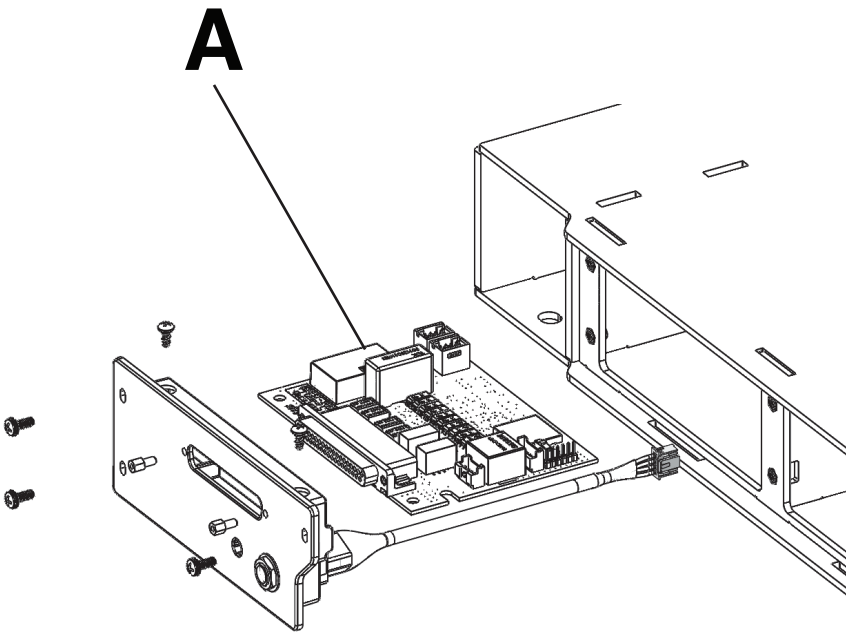

Item	Recyclable part number	Description	Important information	Quantity
A	5900400038	PCBA, IOM PSI	No SVHC present	1

5900200025

Rev C

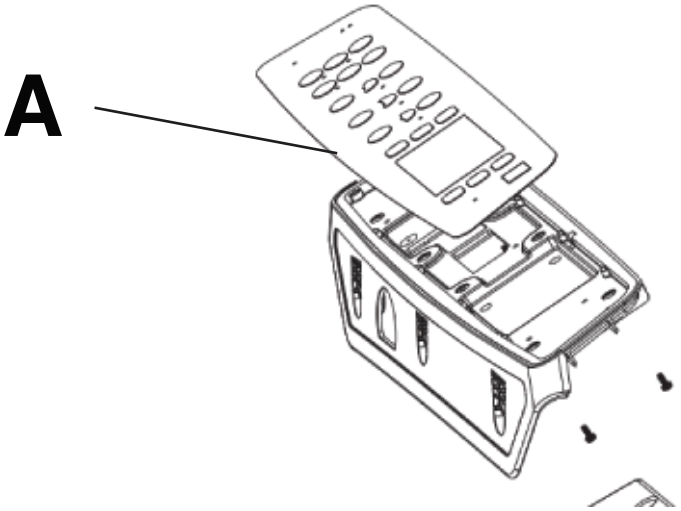

Item	Recyclable part number	Description	Important information	Quantity
A	5900470017	Keypad	No SVHC present	1

5900200130/5900200131

Rev E/Rev E

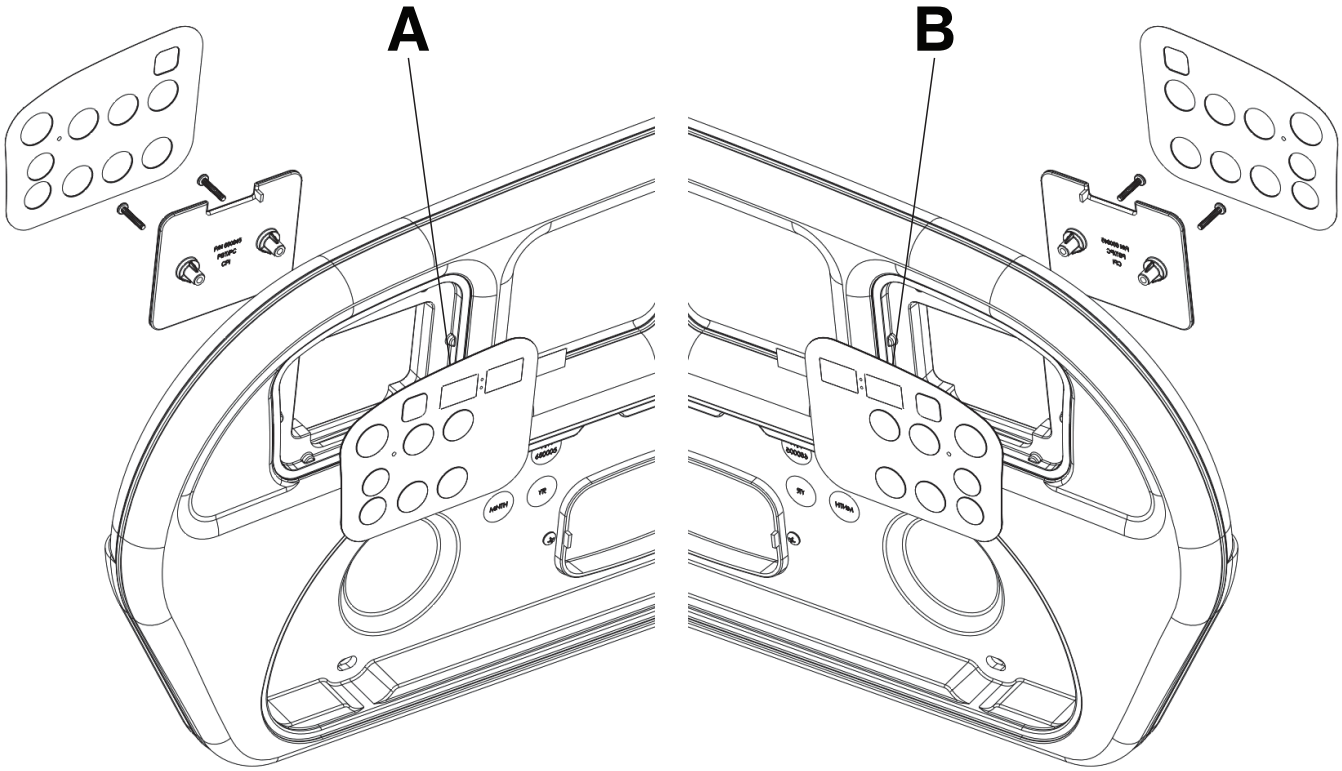

Item	Recyclable part number	Description	Important information	Quantity
A	5900470018	Keypad, siderail PR inboard STD	No SVHC present	1
B	5900470019	Keypad, siderail PL inboard STD	No SVHC present	1

5900400041

Rev AA

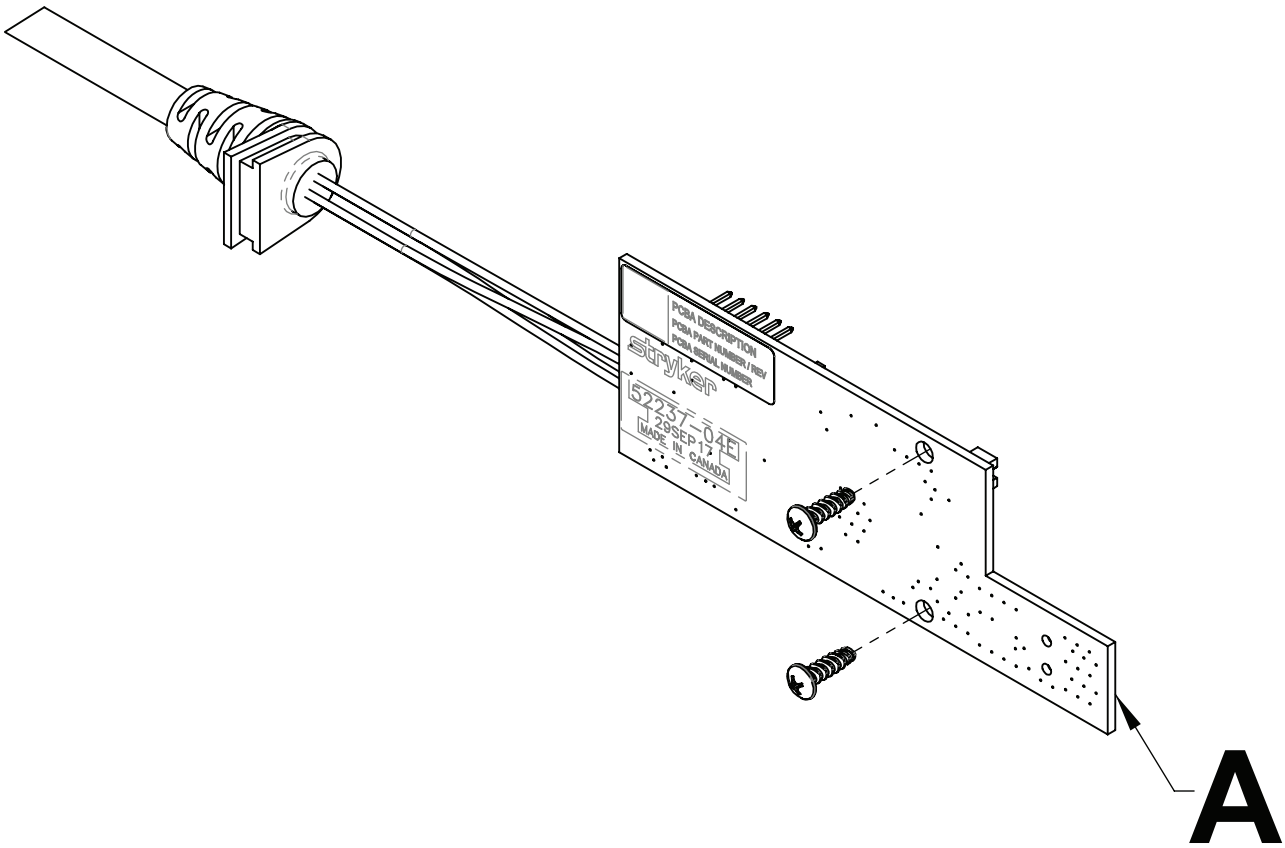

Item	Recyclable part number	Description	Important information	Quantity
A	590040004101, 590040004102, 590040004103	PCBA, IOM deck position monitor	Lead	1

5900410004

Rev AA

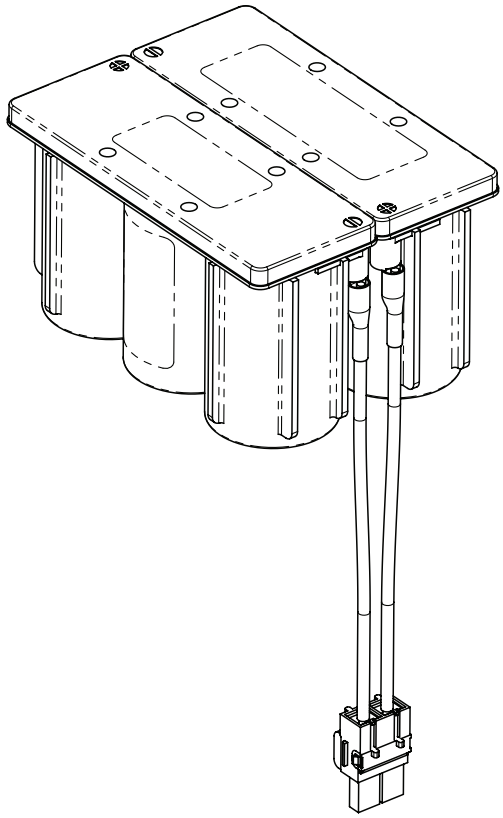

Item	Recyclable part number	Description	Important information	Quantity
A	5900410004	Lead-acid battery	Lead, lead dioxide	2

5900410053

Rev AA

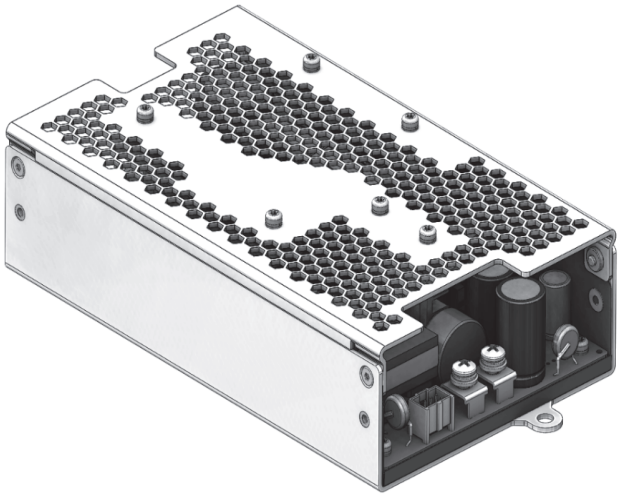

Item	Recyclable part number	Description	Important information	Quantity
A	5900410053	Power supply	Lead, dodecamethylcyclohexasiloxane, decamethylcyclopentasiloxane	1

Stryker Medical
3800 E. Centre Avenue
Portage, MI 49002
USA

WCR: AD.4

2025-11

5900-109-002 Rev AC.0